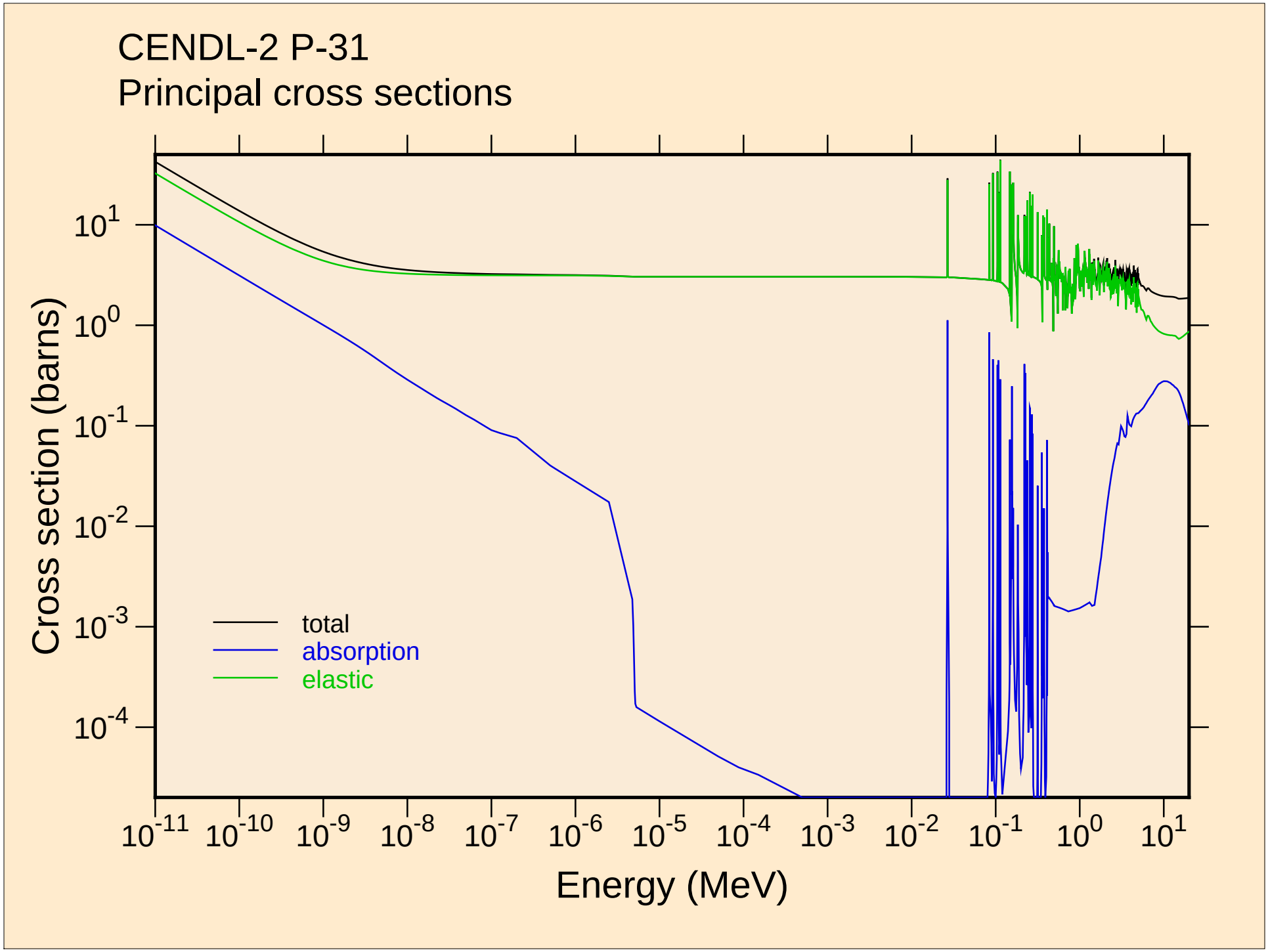
CENDL-2 P-31
Principal cross sections
Cross section (barns)
Energy (MeV)
total
absorption
elastic
10^{1}
10^{0}
10^{-1}
10^{-2}
10^{-3}
10^{-4}
10^{-11} 10^{-10} 10^{-9} 10^{-8} 10^{-7} 10^{-6} 10^{-5} 10^{-4} 10^{-3} 10^{-2} 10^{-1} 10^{0} 10^{1}

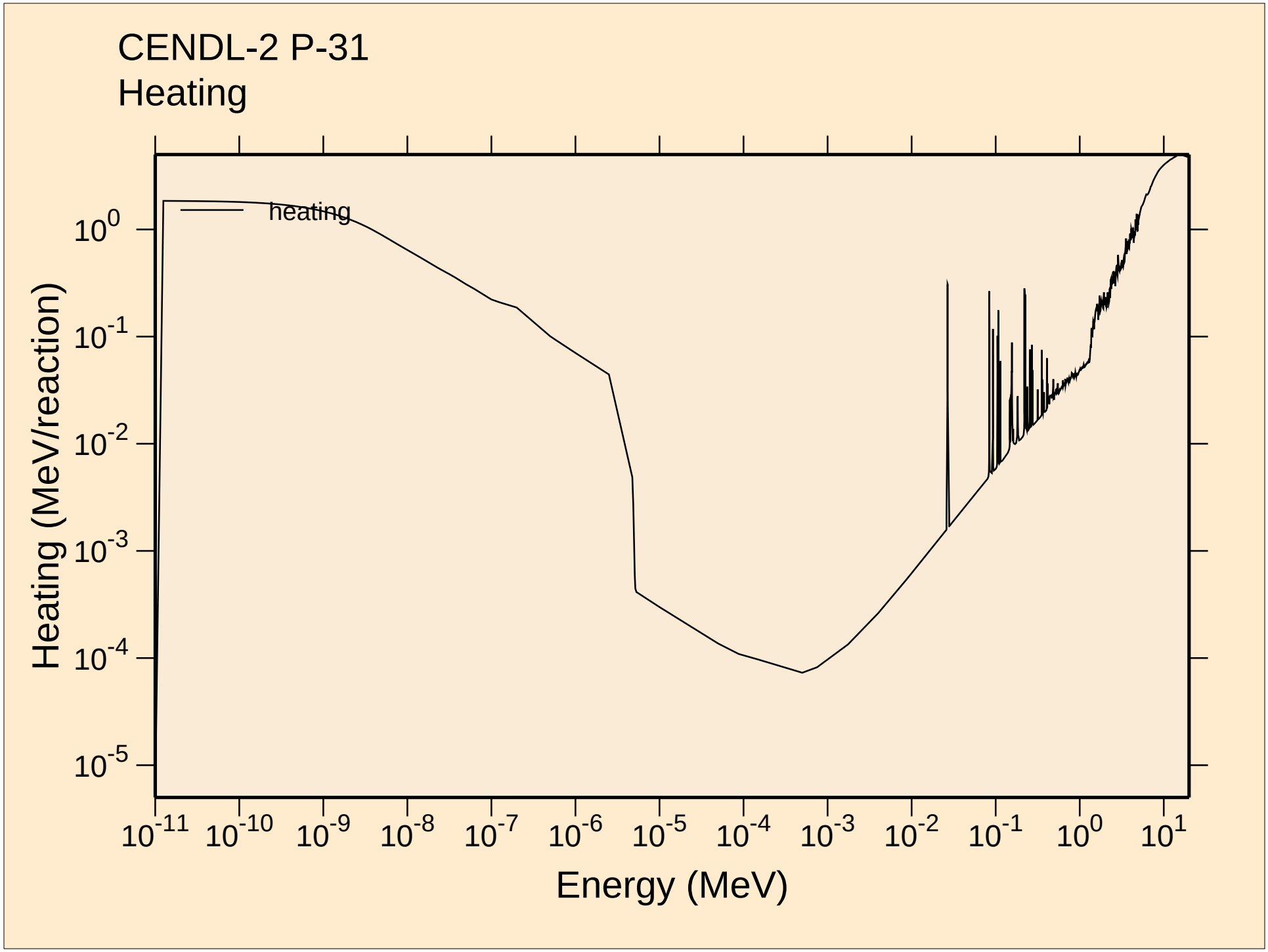
CENDL-2 P-31
Heating
heating
Heating (MeV/reaction)
Energy (MeV)
10^{0}
10^{-1}
10^{-2}
10^{-3}
10^{-4}
10^{-5}
10^{-11} 10^{-10} 10^{-9} 10^{-8} 10^{-7} 10^{-6} 10^{-5} 10^{-4} 10^{-3} 10^{-2} 10^{-1} 10^{0} 10^{1}

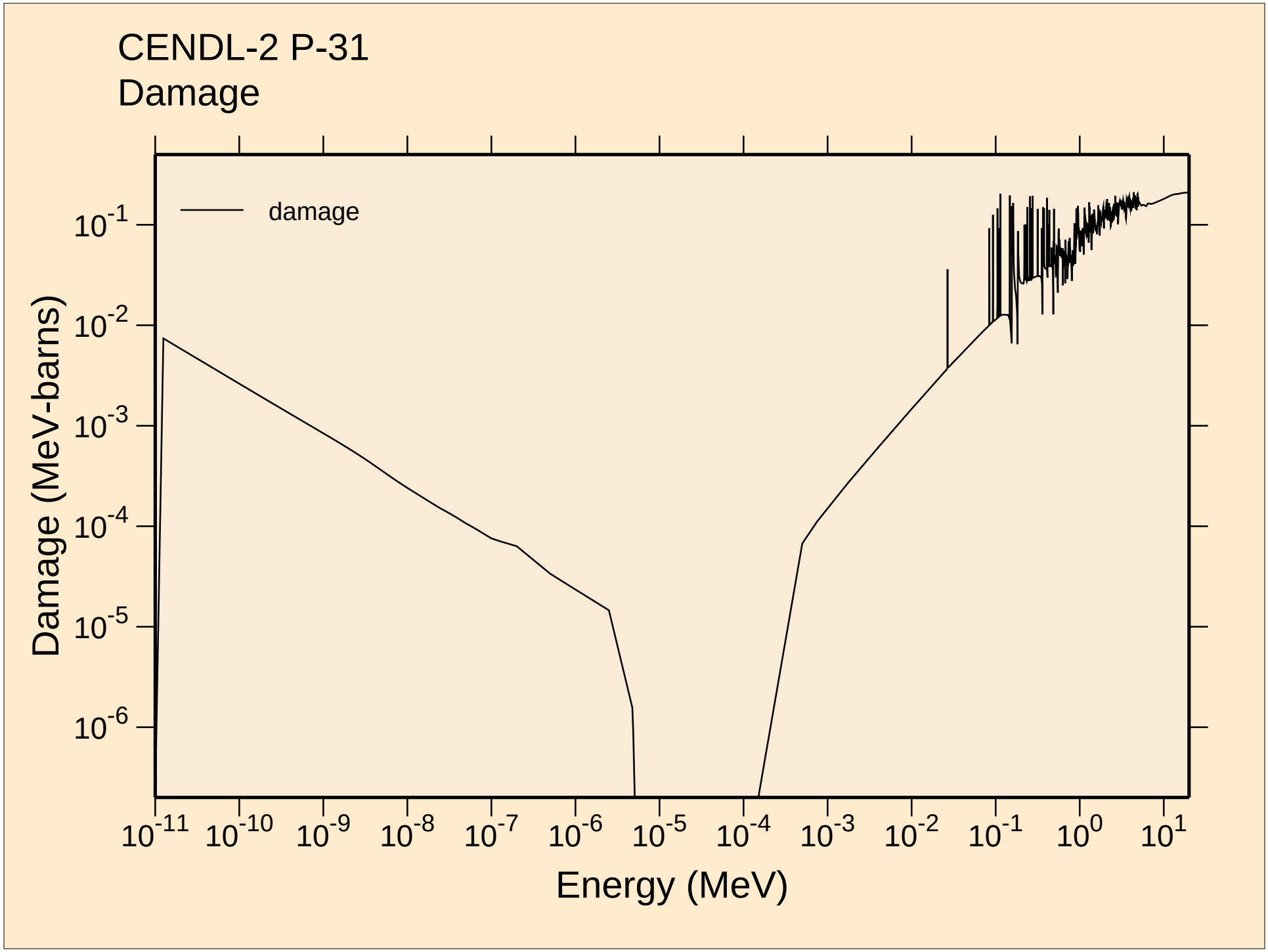
CENDL-2 P-31
Damage
damage
Damage (MeV-barns)
Energy (MeV)
10^-1
10^-2
10^-3
10^-4
10^-5
10^-6
10^-11
10^-10
10^-9
10^-8
10^-7
10^-6
10^-5
10^-4
10^-3
10^-2
10^-1
10^0
10^1

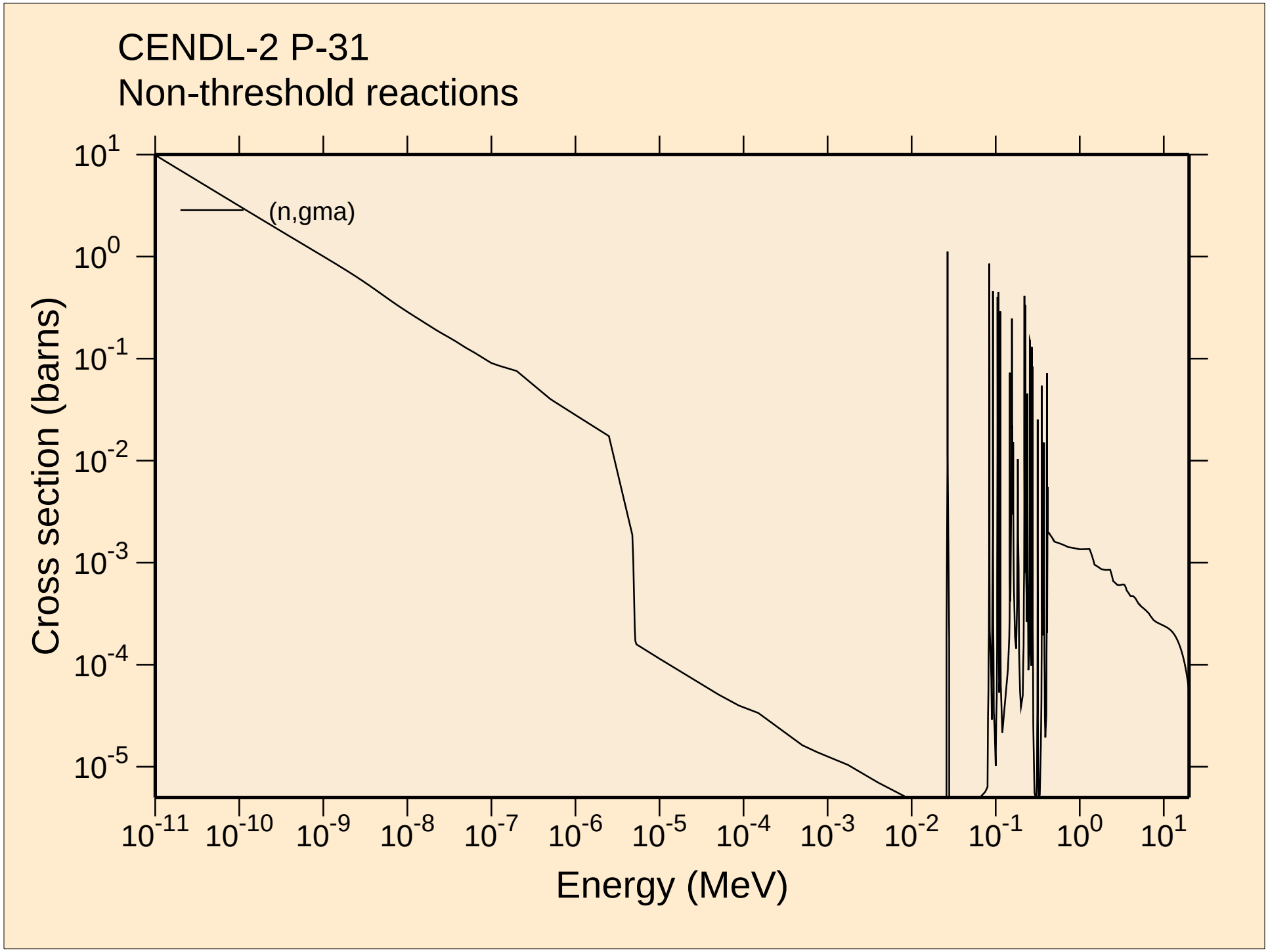
CENDL-2 P-31
Non-threshold reactions
(n,gma)
Cross section (barns)
Energy (MeV)
10^1
10^0
10^-1
10^-2
10^-3
10^-4
10^-5
10^-11
10^-10
10^-9
10^-8
10^-7
10^-6
10^-5
10^-4
10^-3
10^-2
10^-1
10^0
10^1

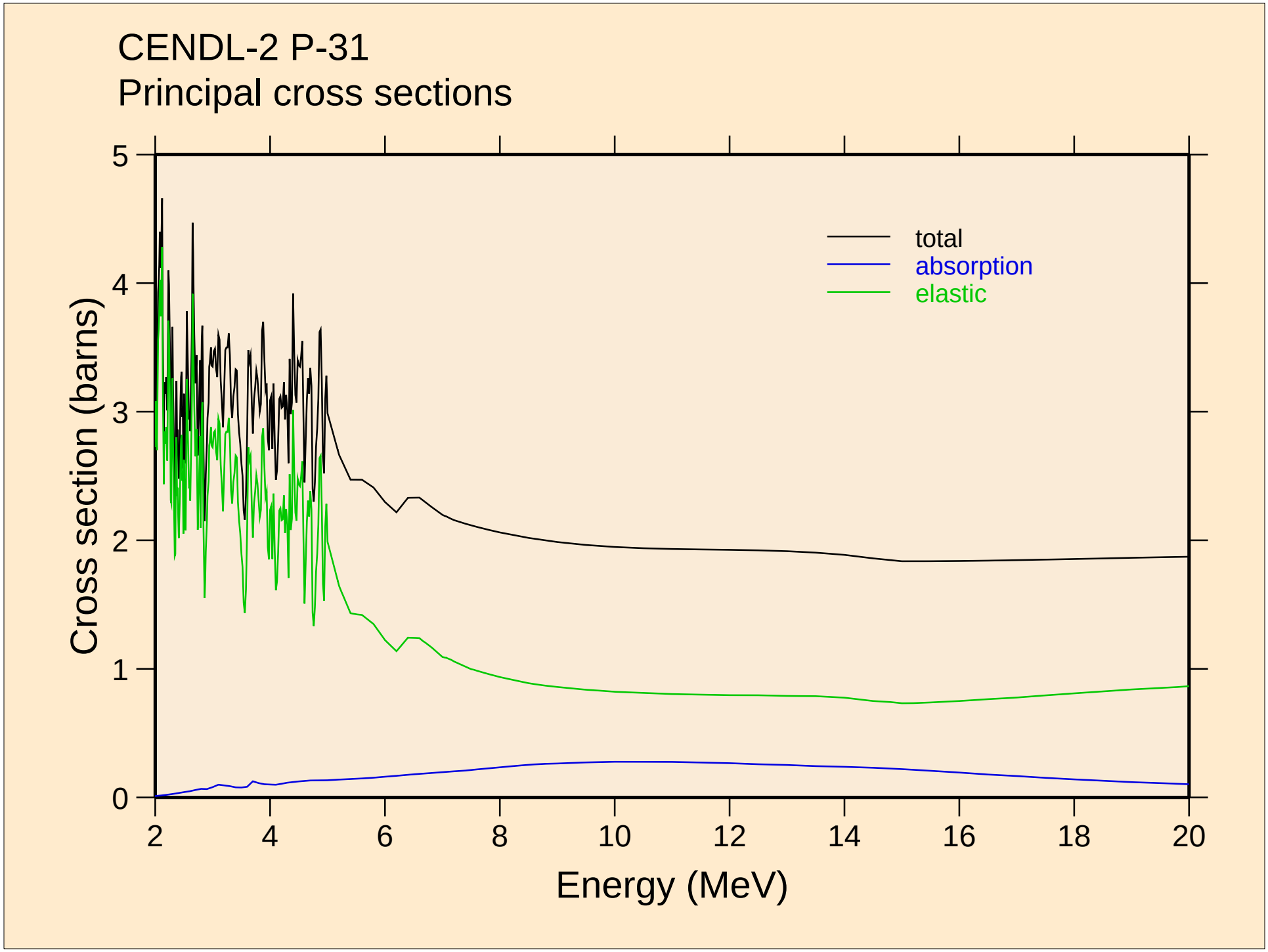
CENDL-2 P-31
Principal cross sections
total
absorption
elastic
Cross section (barns)
Energy (MeV)
0
1
2
3
4
5
2
4
6
8
10
12
14
16
18
20

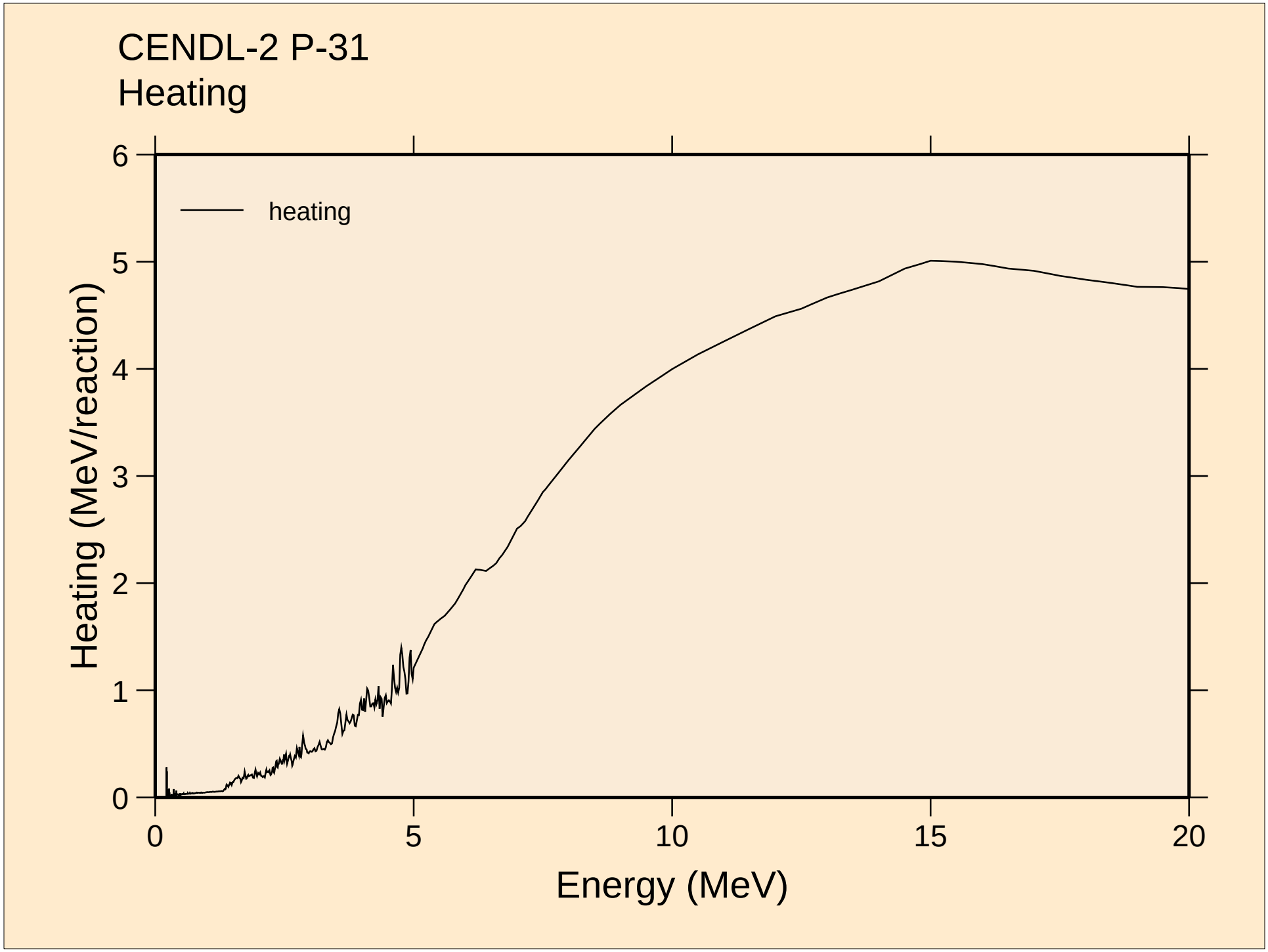
CENDL-2 P-31
Heating
heating
Heating (MeV/reaction)
Energy (MeV)
0
1
2
3
4
5
6
0
5
10
15
20

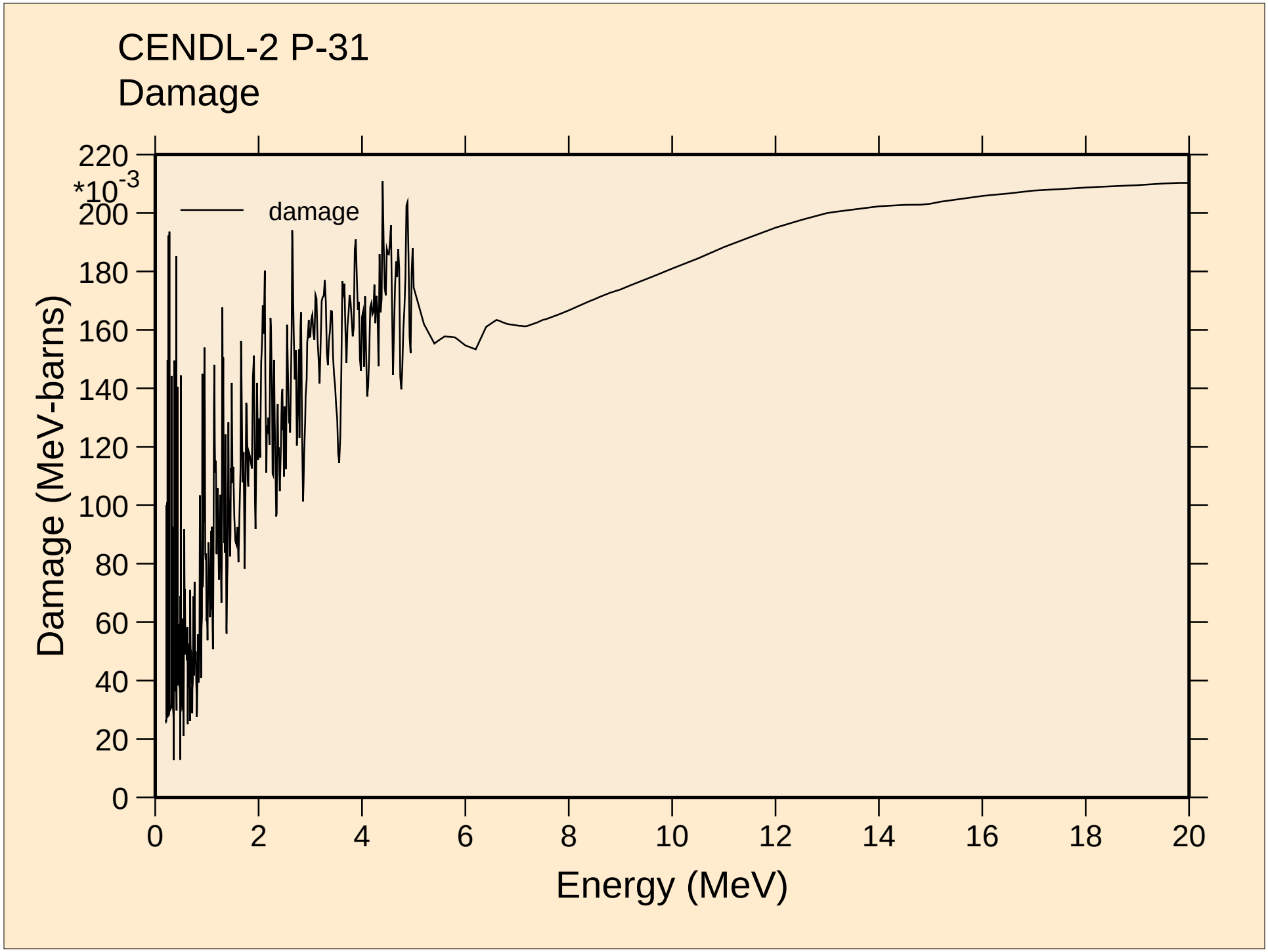
CENDL-2 P-31
Damage
damage
*10-3
Damage (MeV-barns)
Energy (MeV)
0
20
40
60
80
100
120
140
160
180
200
220
0
2
4
6
8
10
12
14
16
18
20

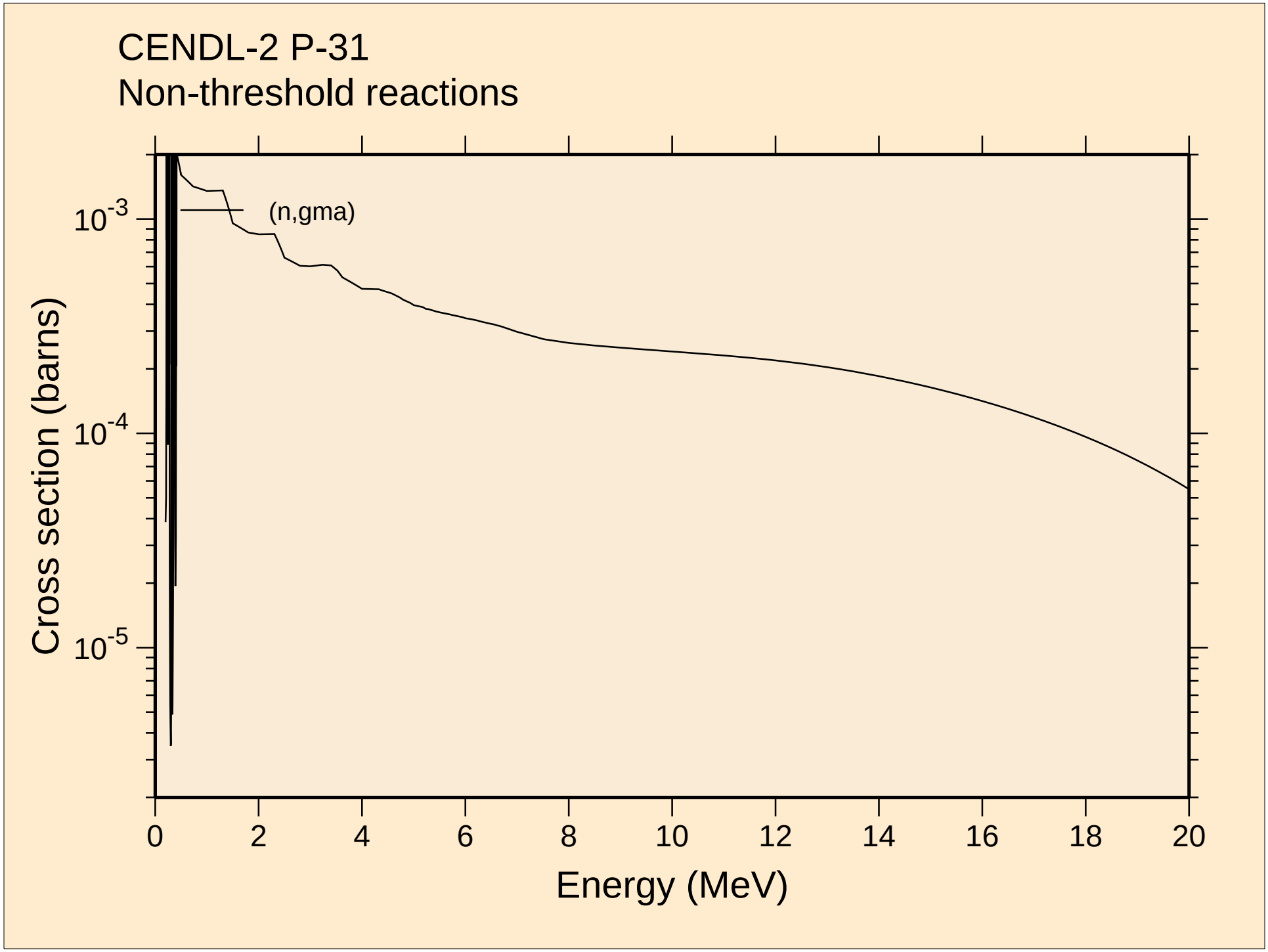
CENDL-2 P-31
Non-threshold reactions
(n,gma)
Cross section (barns)
10-3
10-4
10-5
0
2
4
6
8
10
12
14
16
18
20
Energy (MeV)

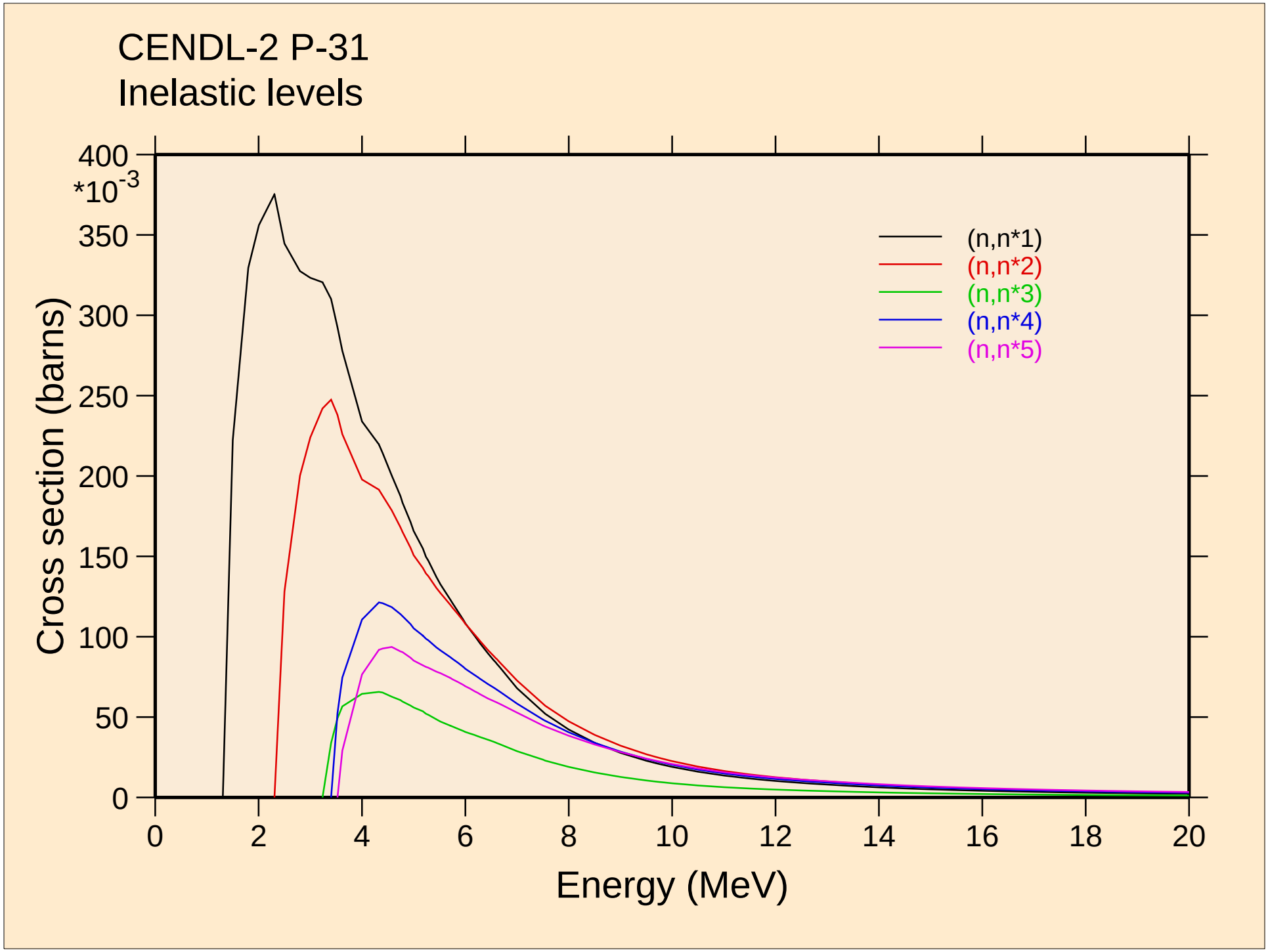
CENDL-2 P-31
Inelastic levels
Cross section (barns)
*10^-3
400
350
300
250
200
150
100
50
0
0
2
4
6
8
10
12
14
16
18
20
Energy (MeV)
(n,n*1)
(n,n*2)
(n,n*3)
(n,n*4)
(n,n*5)

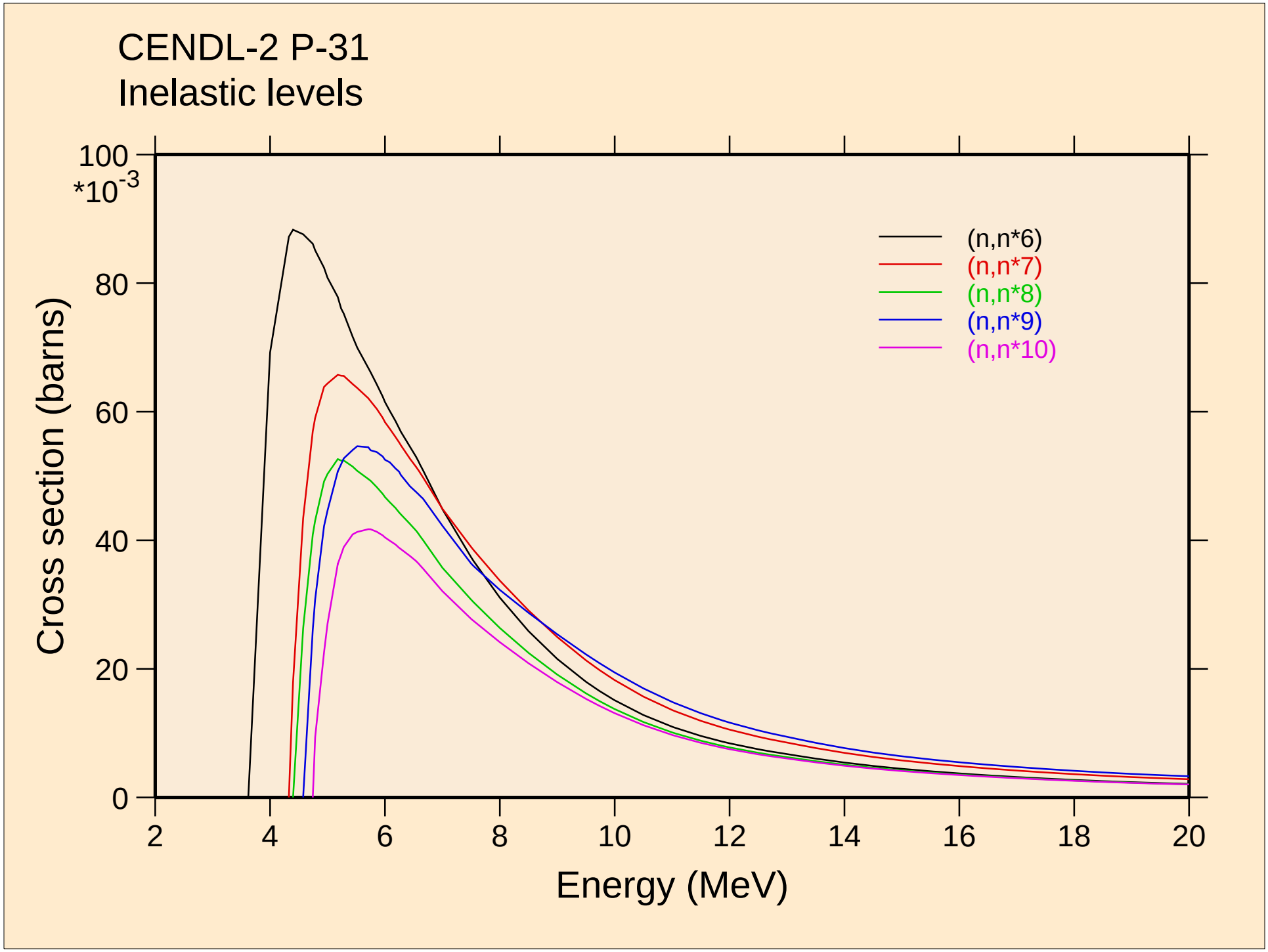
CENDL-2 P-31
Inelastic levels
100
*10-3
80
60
40
20
0
Cross section (barns)
2
4
6
8
10
12
14
16
18
20
Energy (MeV)
(n,n*6)
(n,n*7)
(n,n*8)
(n,n*9)
(n,n*10)

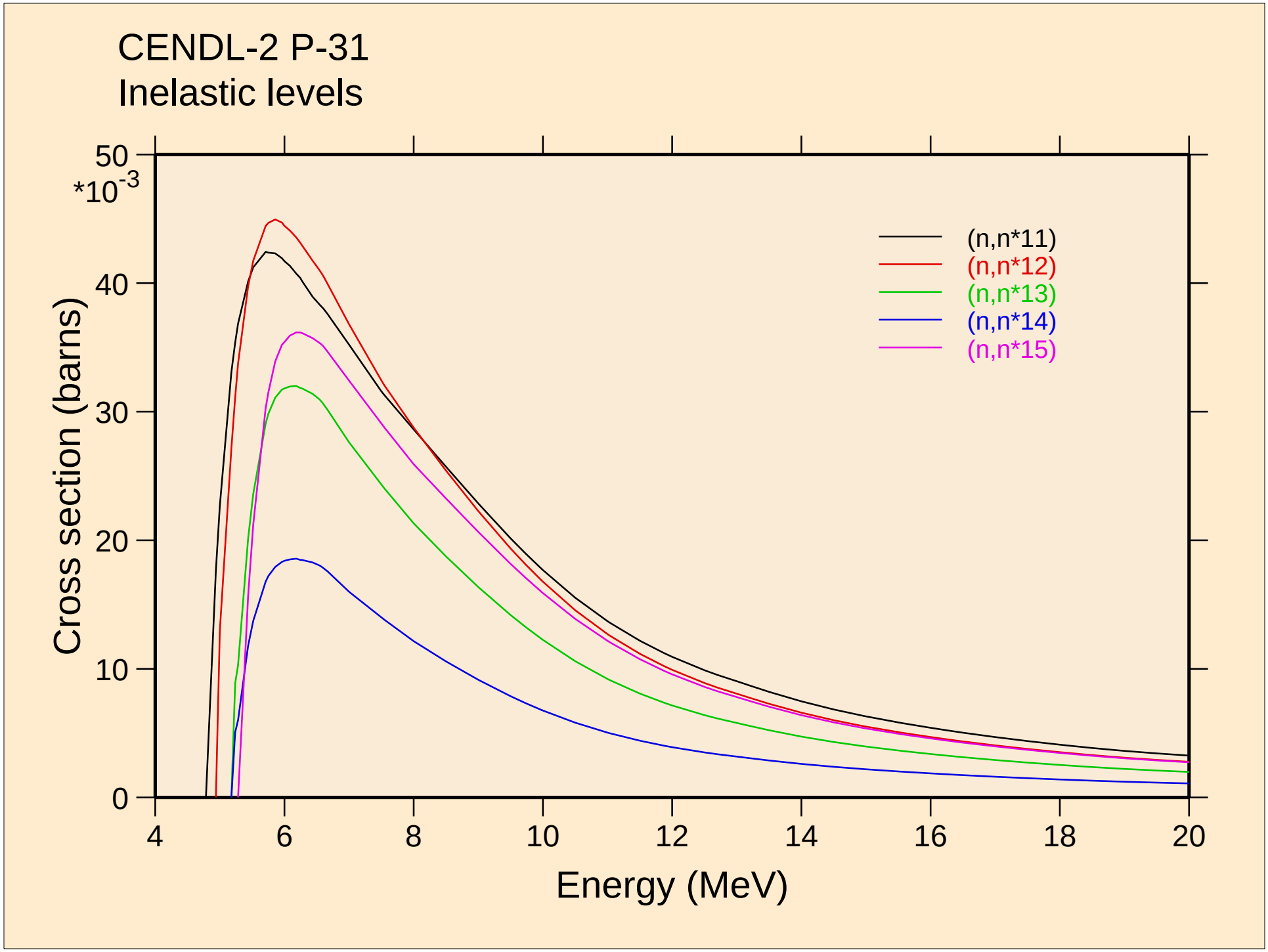
CENDL-2 P-31
Inelastic levels
Cross section (barns)
*10-3
50
40
30
20
10
0
4
6
8
10
12
14
16
18
20
Energy (MeV)
(n,n*11)
(n,n*12)
(n,n*13)
(n,n*14)
(n,n*15)

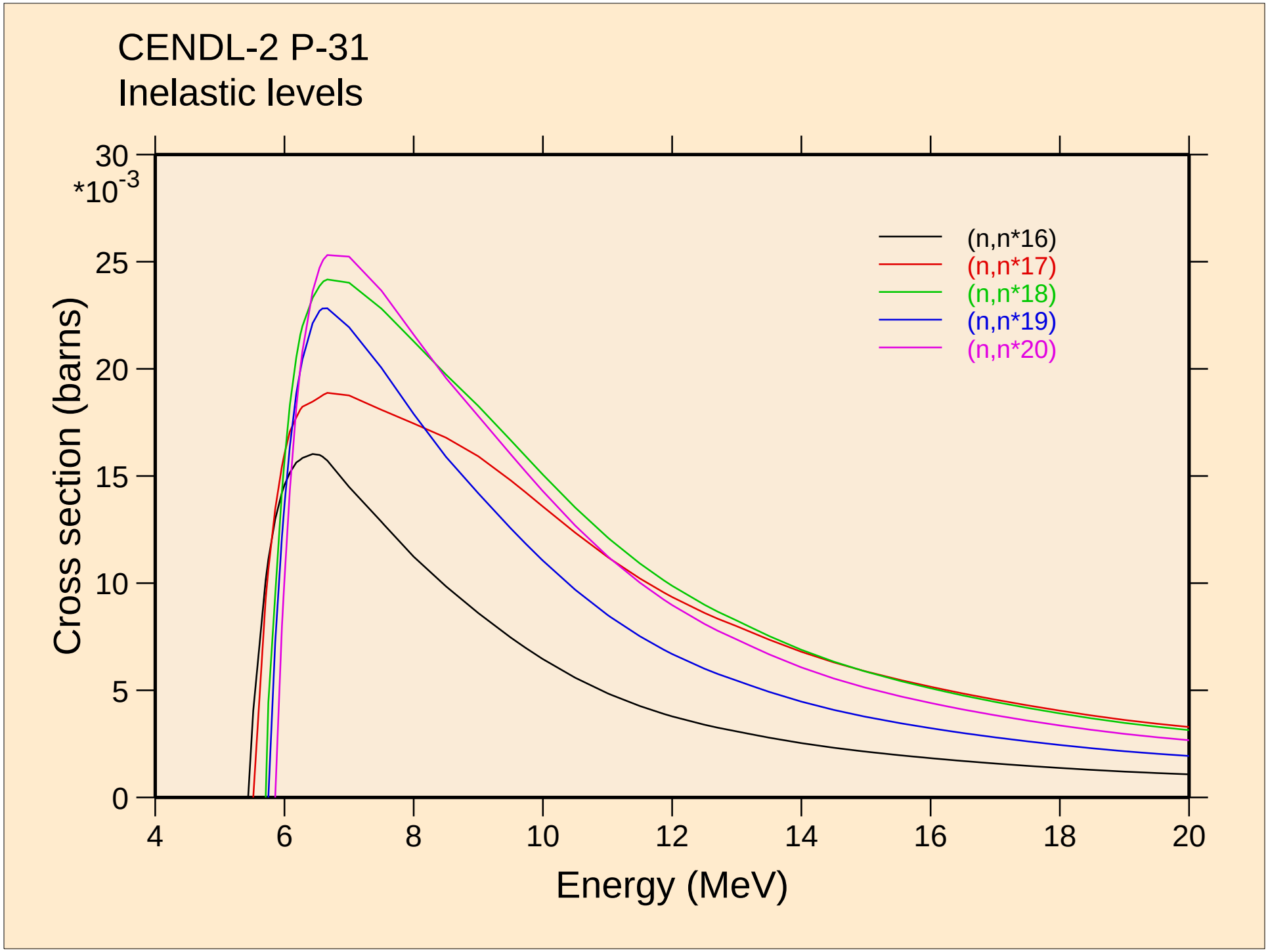
CENDL-2 P-31
Inelastic levels
Cross section (barns)
*10^-3
30
25
20
15
10
5
0
4
6
8
10
12
14
16
18
20
Energy (MeV)
(n,n*16)
(n,n*17)
(n,n*18)
(n,n*19)
(n,n*20)

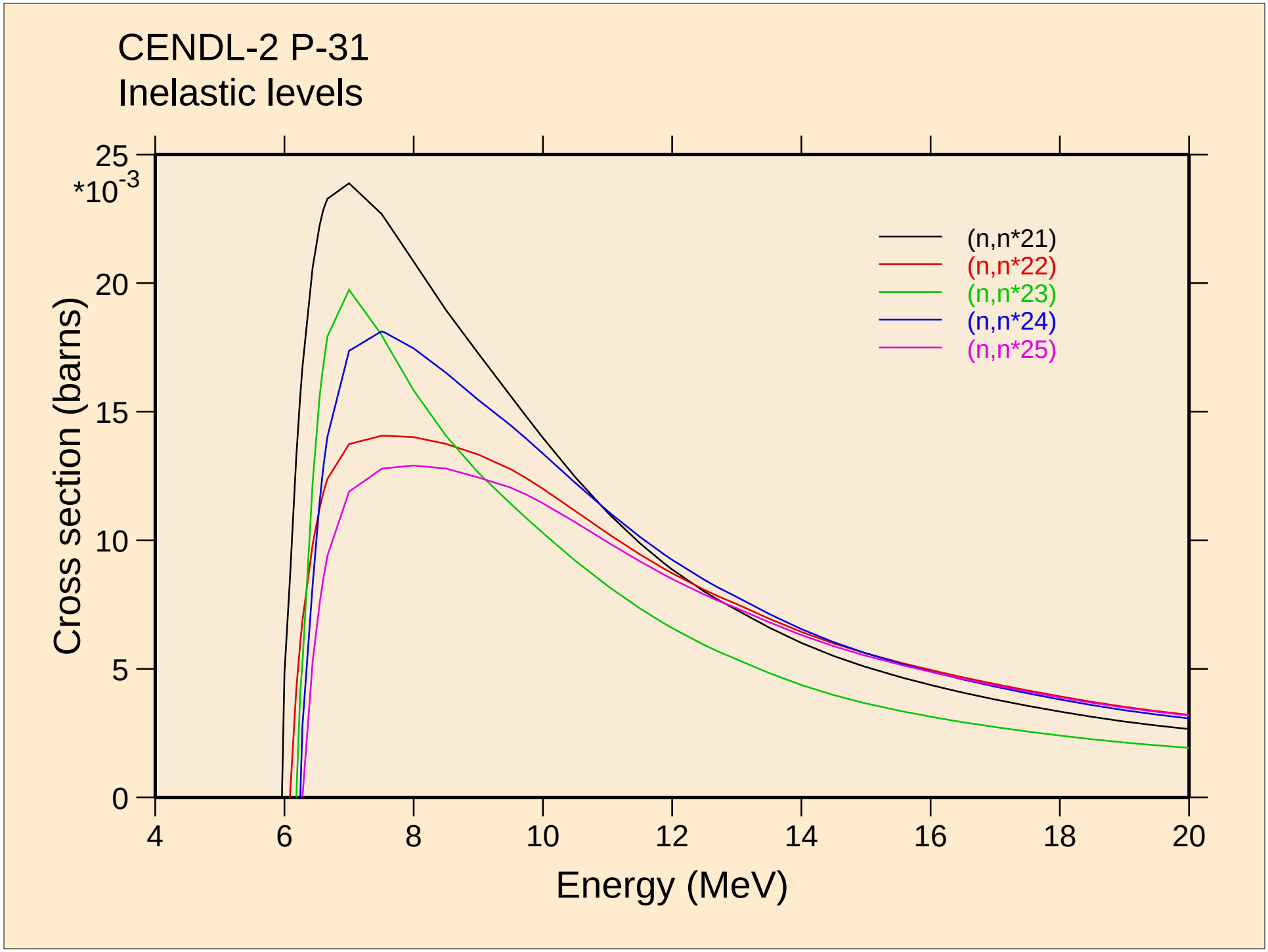
CENDL-2 P-31
Inelastic levels
Cross section (barns)
*10^-3
25
20
15
10
5
0
4
6
8
10
12
14
16
18
20
Energy (MeV)
(n,n*21)
(n,n*22)
(n,n*23)
(n,n*24)
(n,n*25)

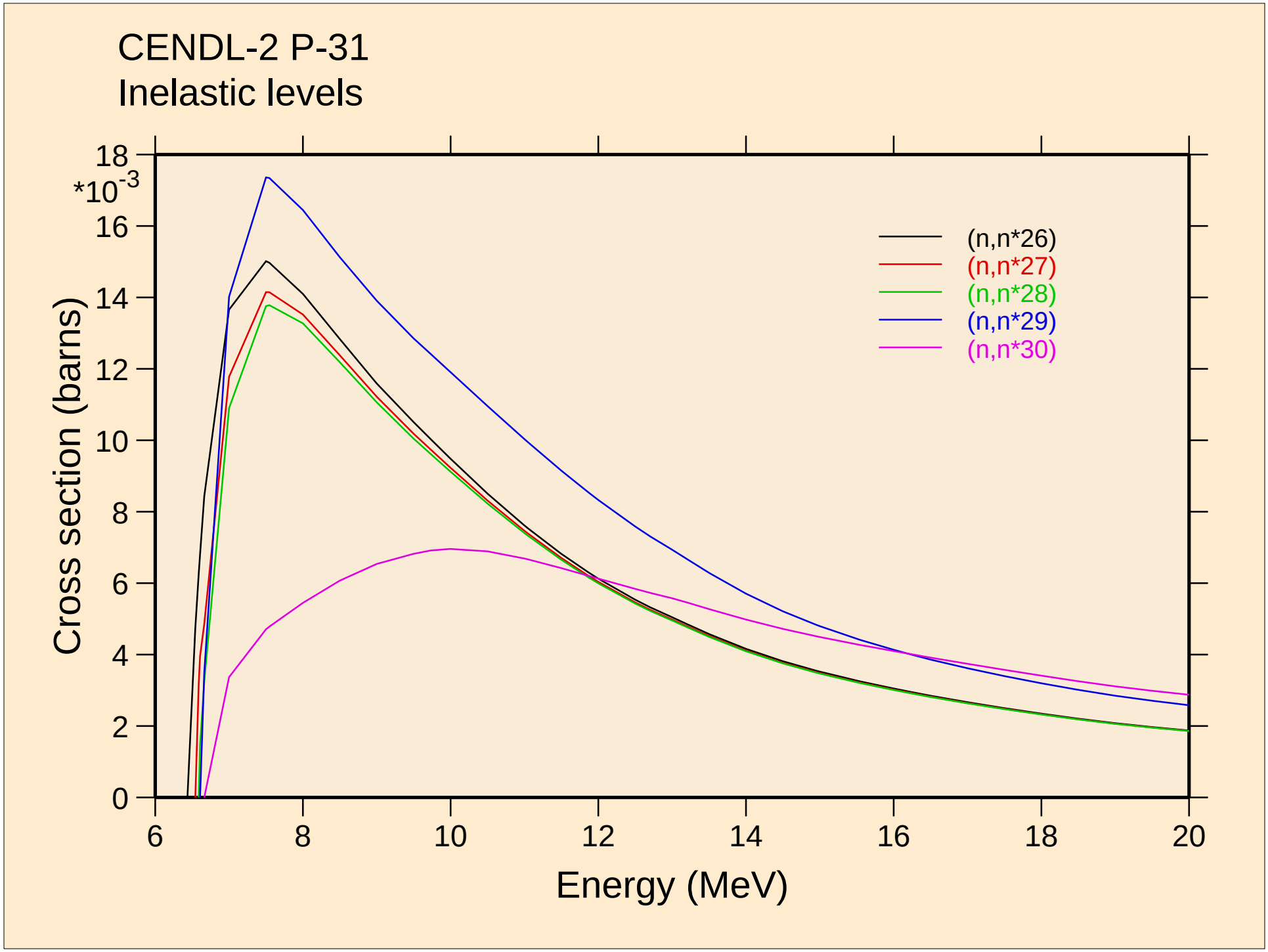
CENDL-2 P-31
Inelastic levels
Cross section (barns)
*10^-3
18
16
14
12
10
8
6
4
2
0
6
8
10
12
14
16
18
20
Energy (MeV)
(n,n*26)
(n,n*27)
(n,n*28)
(n,n*29)
(n,n*30)

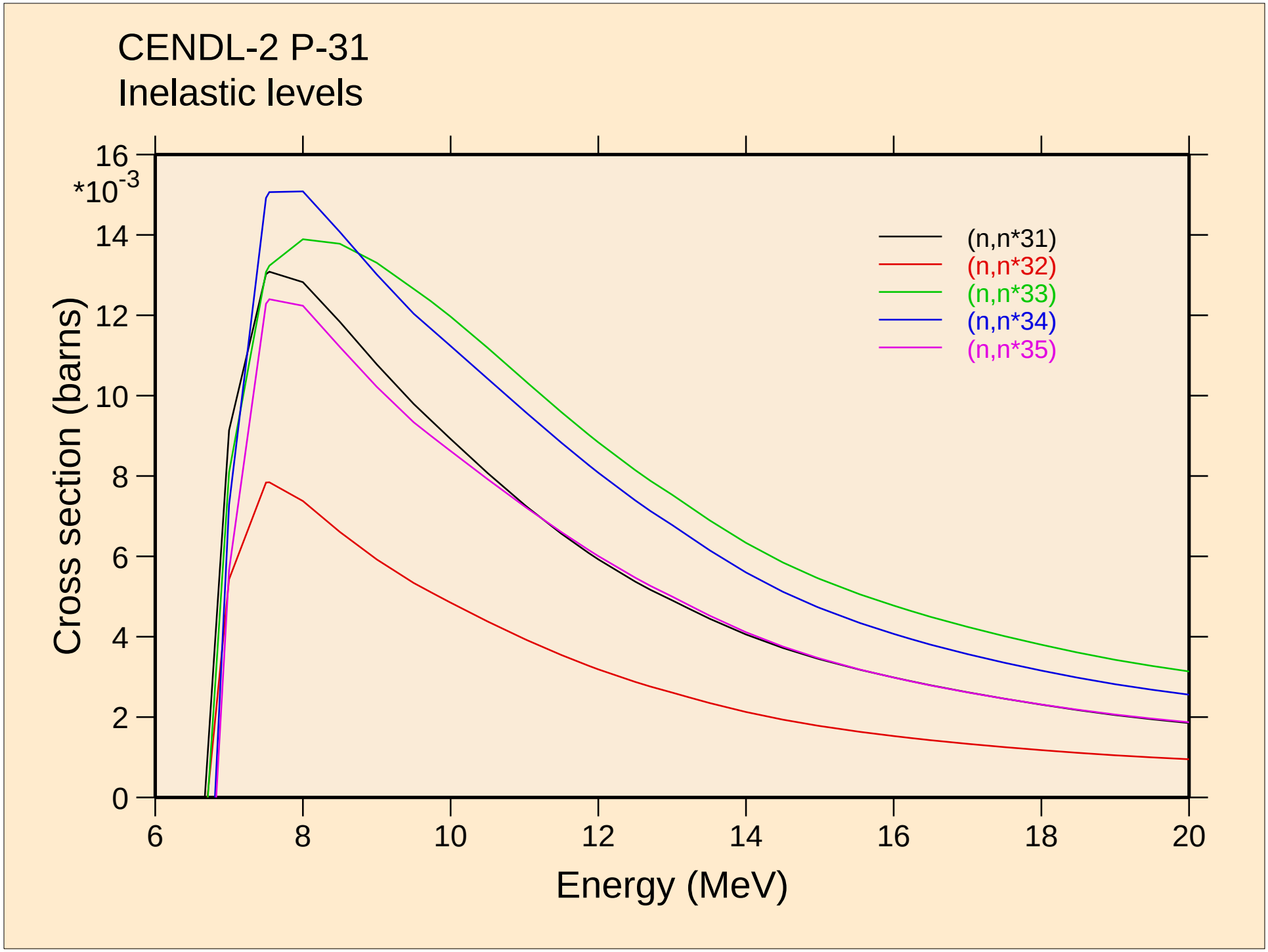
CENDL-2 P-31
Inelastic levels
Cross section (barns)
*10-3
16
14
12
10
8
6
4
2
0
6
8
10
12
14
16
18
20
Energy (MeV)
(n,n*31)
(n,n*32)
(n,n*33)
(n,n*34)
(n,n*35)

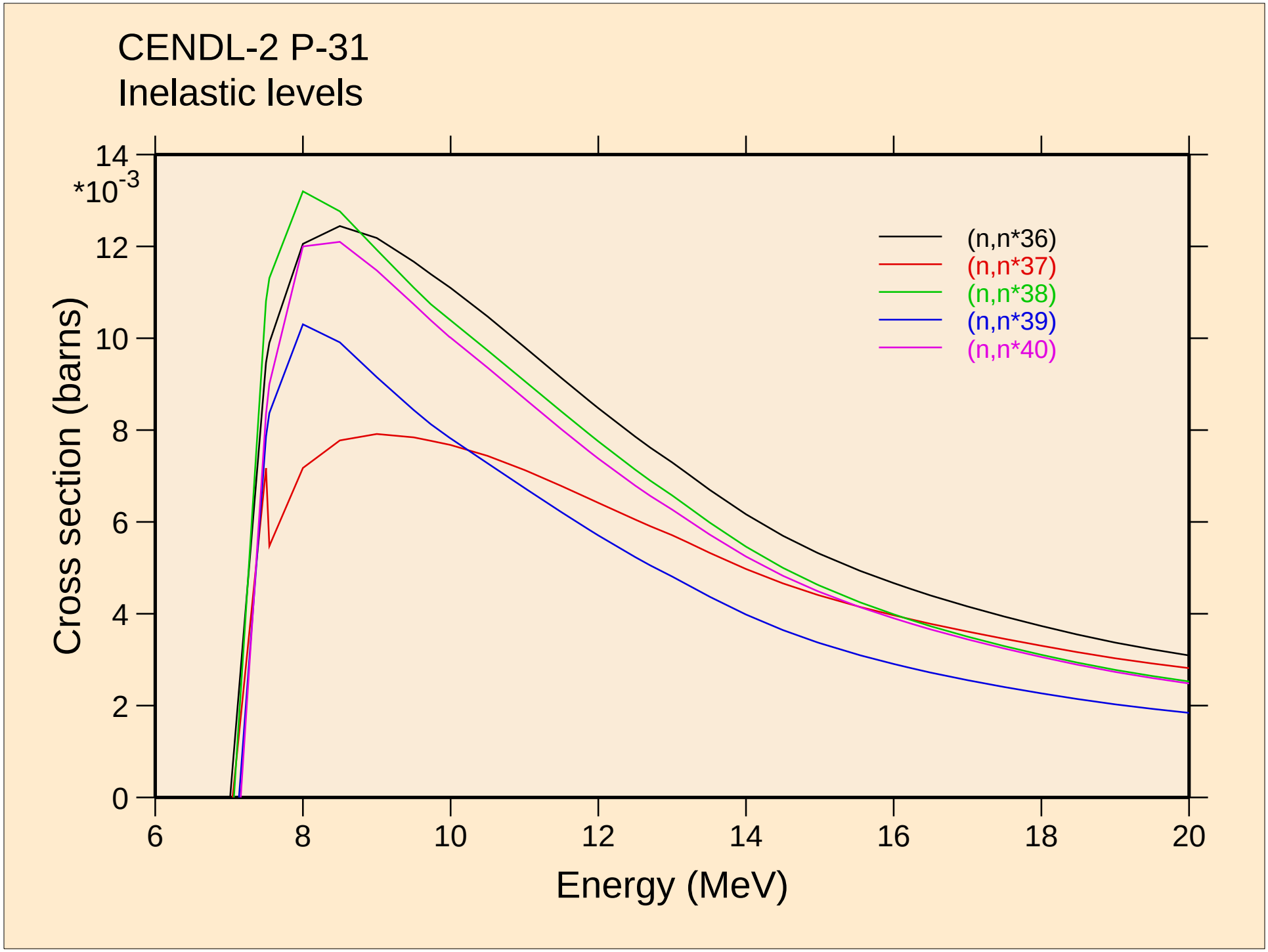
CENDL-2 P-31
Inelastic levels
Cross section (barns)
*10^-3
14
12
10
8
6
4
2
0
6
8
10
12
14
16
18
20
Energy (MeV)
(n,n*36)
(n,n*37)
(n,n*38)
(n,n*39)
(n,n*40)

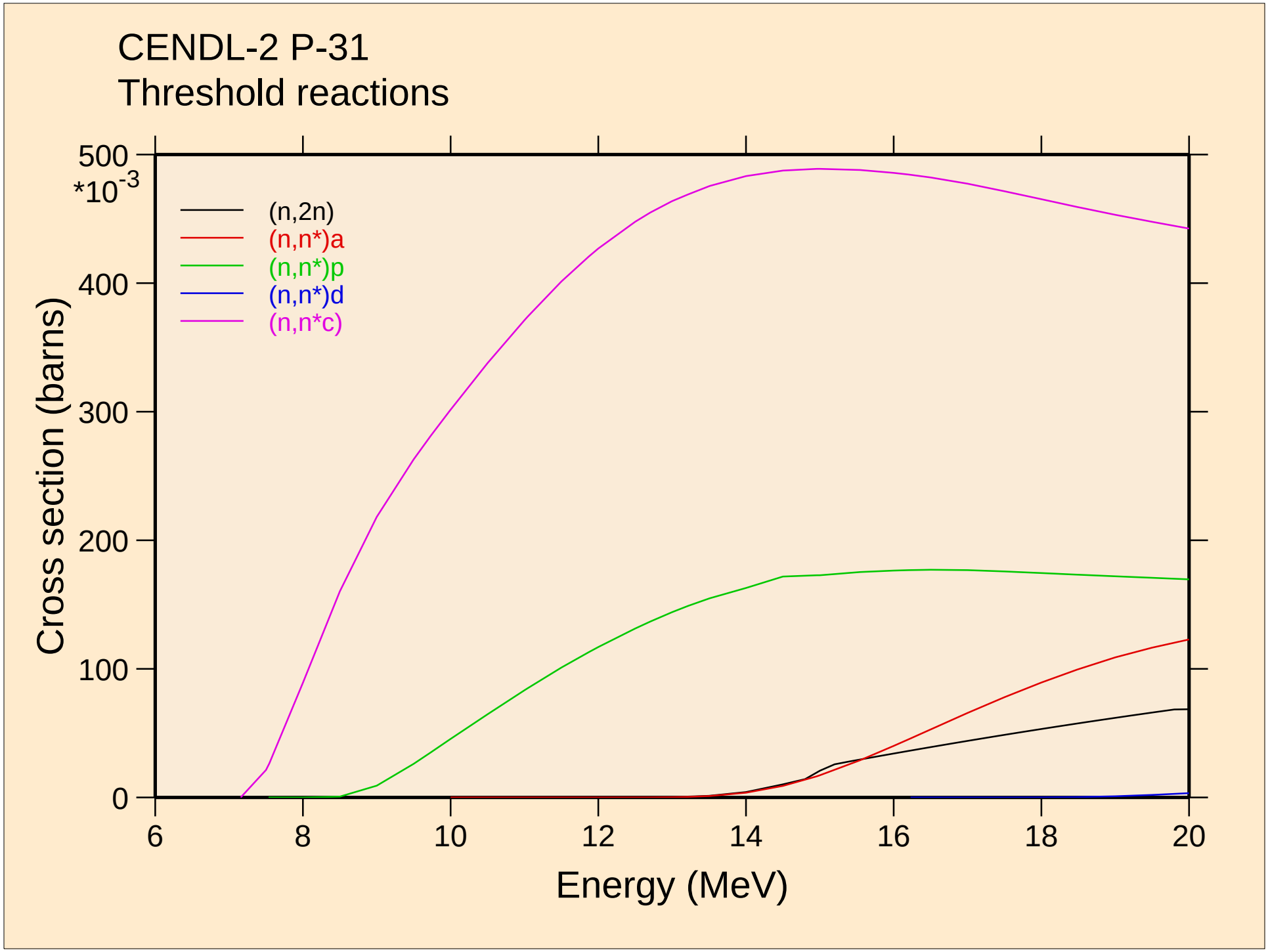
CENDL-2 P-31
Threshold reactions
500
*10-3
400
300
200
100
0
Cross section (barns)
(n,2n)
(n,n*)a
(n,n*)p
(n,n*)d
(n,n*c)
6
8
10
12
14
16
18
20
Energy (MeV)

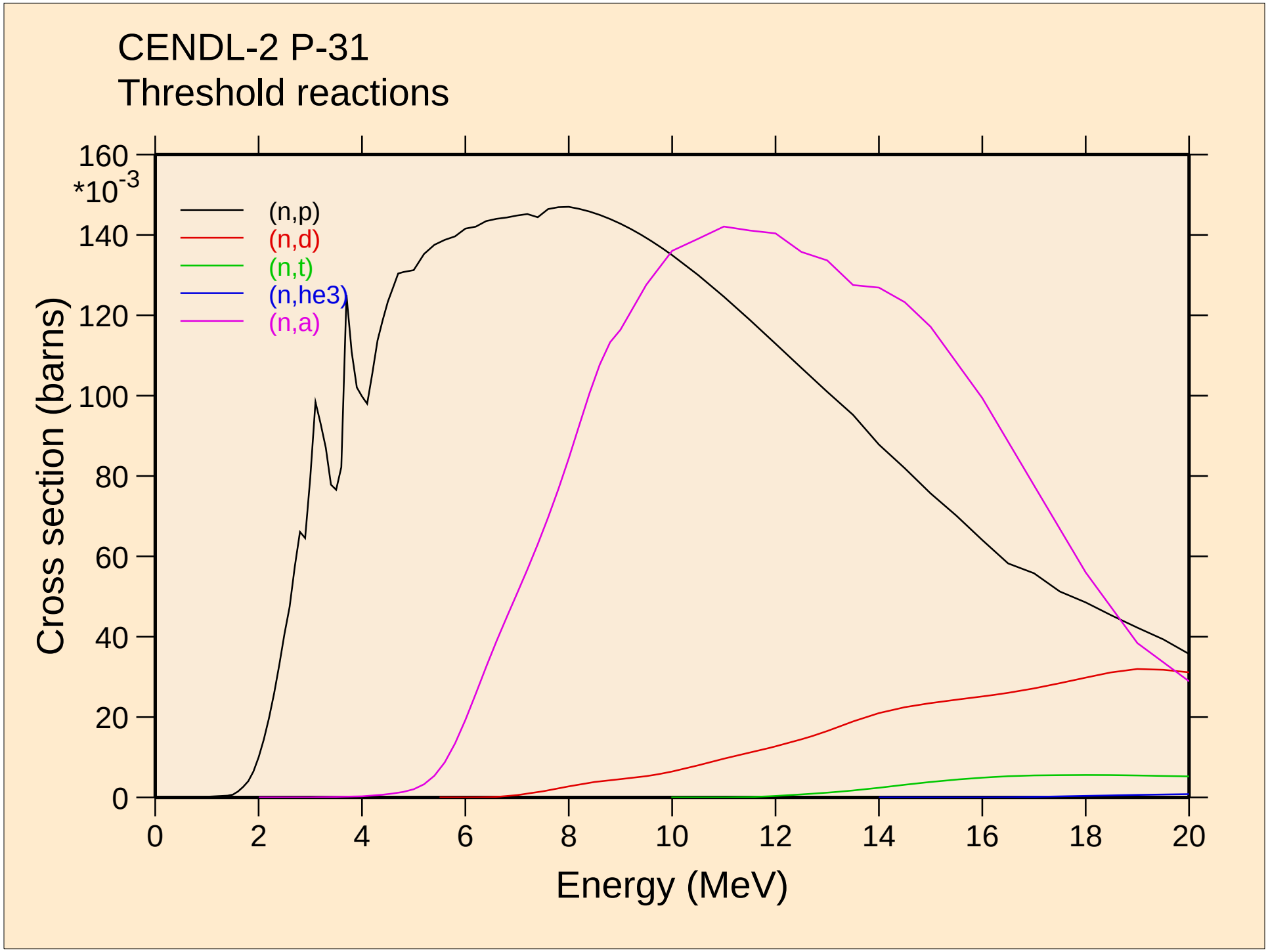
CENDL-2 P-31
Threshold reactions
(n,p)
(n,d)
(n,t)
(n,he3)
(n,a)
Cross section (barns)
*10-3
160
140
120
100
80
60
40
20
0
0
2
4
6
8
10
12
14
16
18
20
Energy (MeV)

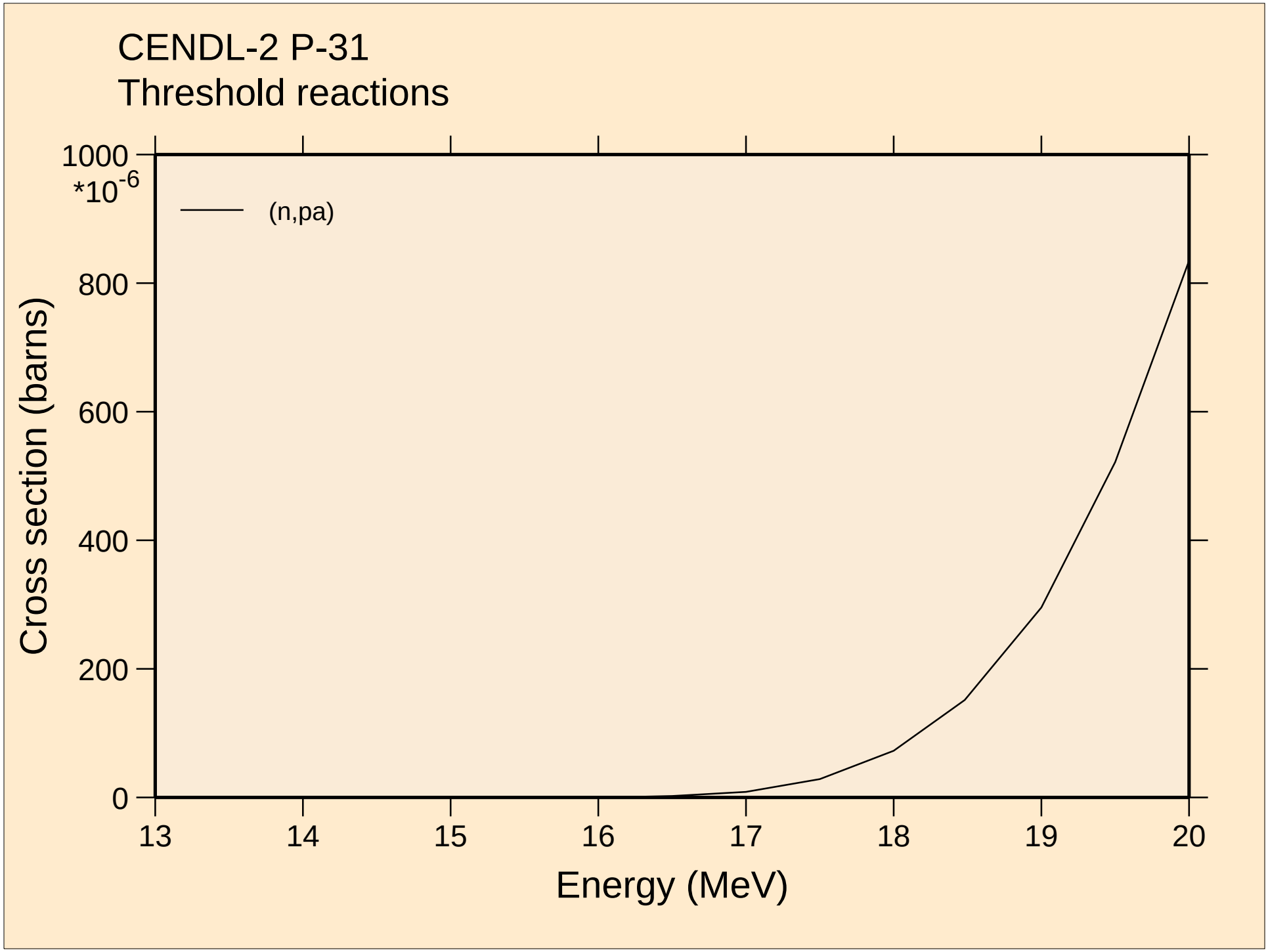
CENDL-2 P-31
Threshold reactions
(n,pa)
Cross section (barns)
*10-6
1000
800
600
400
200
0
13
14
15
16
17
18
19
20
Energy (MeV)

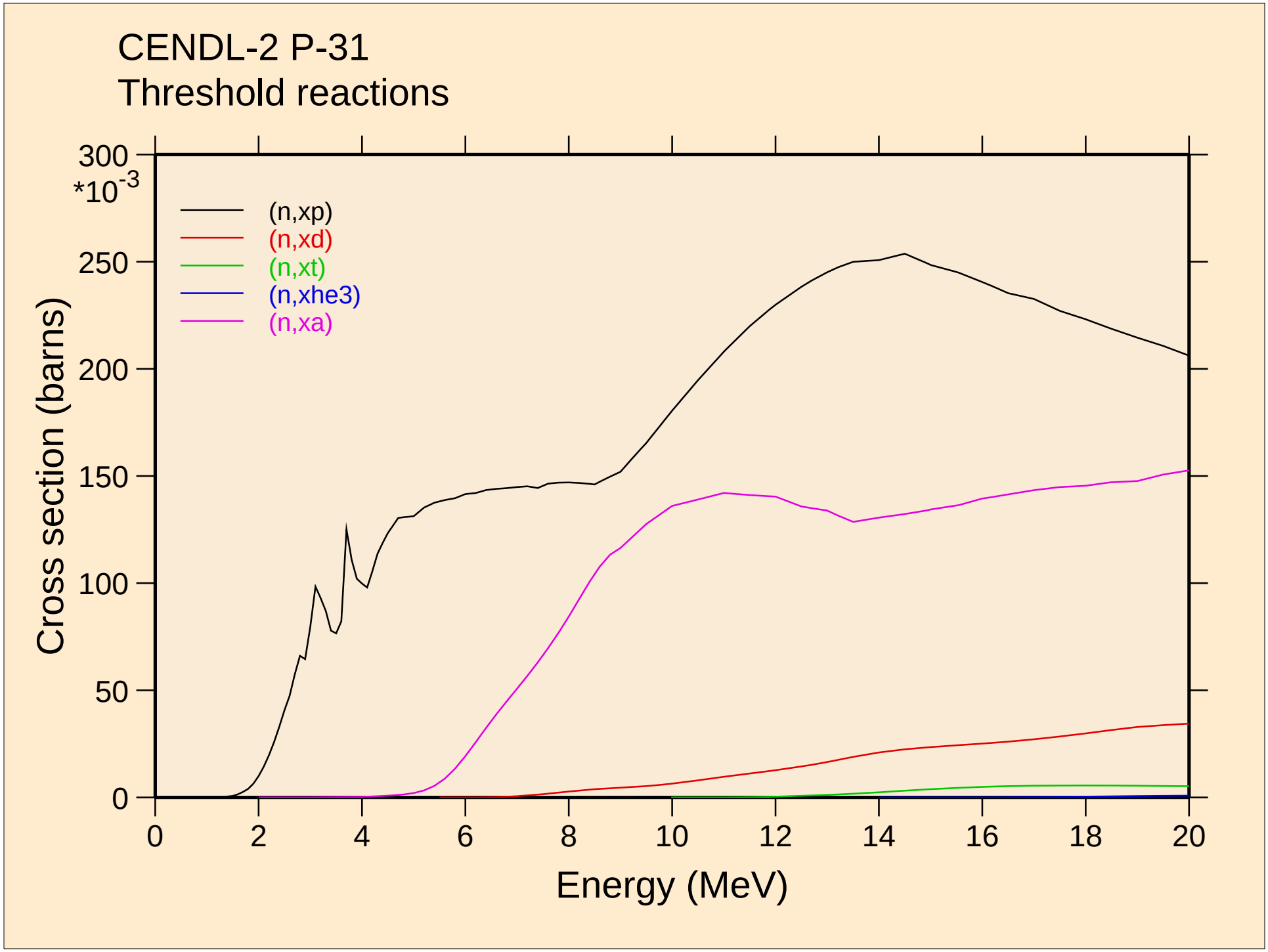
CENDL-2 P-31
Threshold reactions
(n,xp)
(n,xd)
(n,xt)
(n,xhe3)
(n,xa)
Cross section (barns)
*10-3
300
250
200
150
100
50
0
0
2
4
6
8
10
12
14
16
18
20
Energy (MeV)

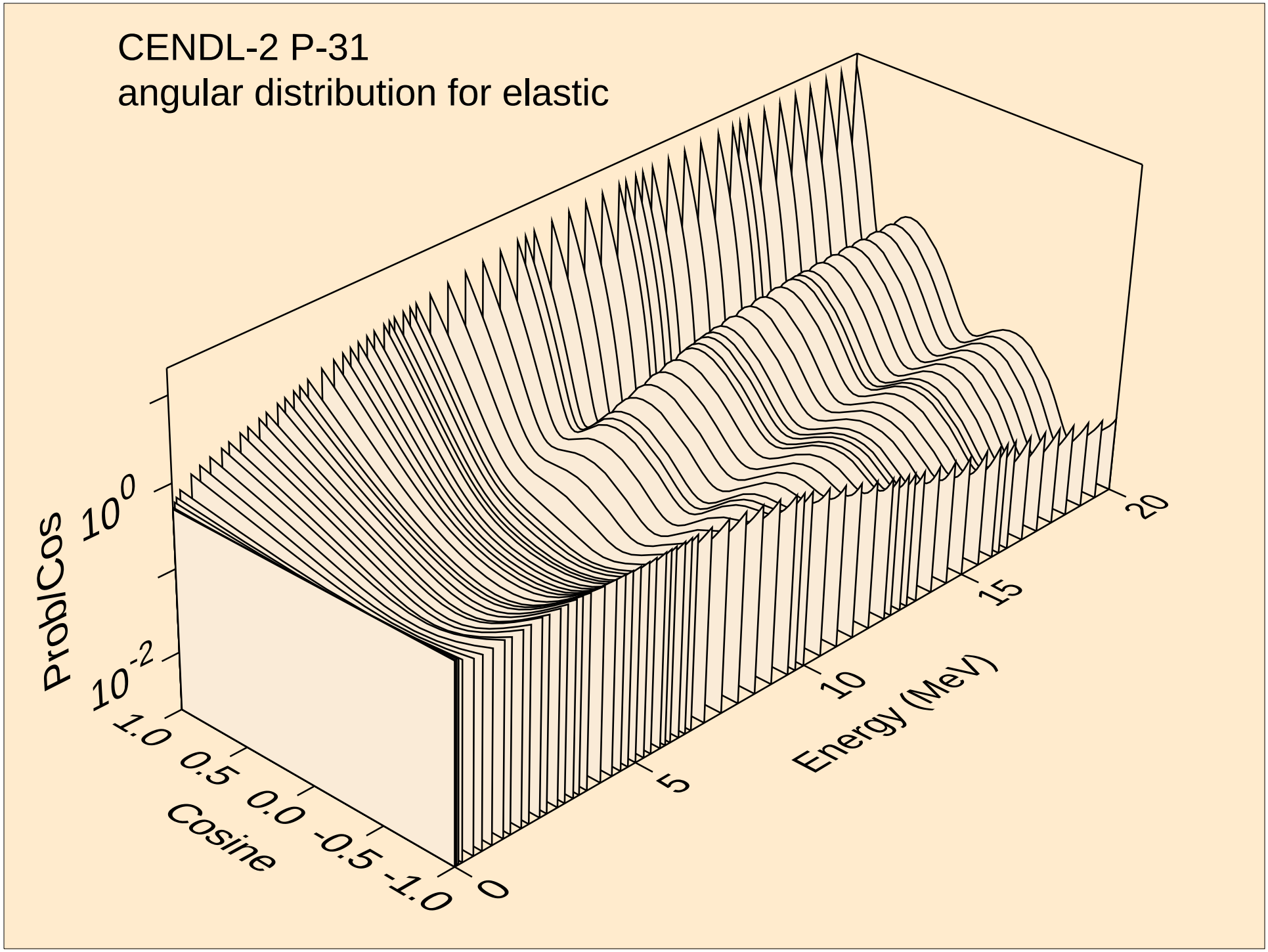
CENDL-2 P-31
angular distribution for elastic
ProblCos
10^0
10^{-2}
1.0
0.5
0.0
-0.5
-1.0
Cosine
0
5
10
15
20
Energy (MeV)

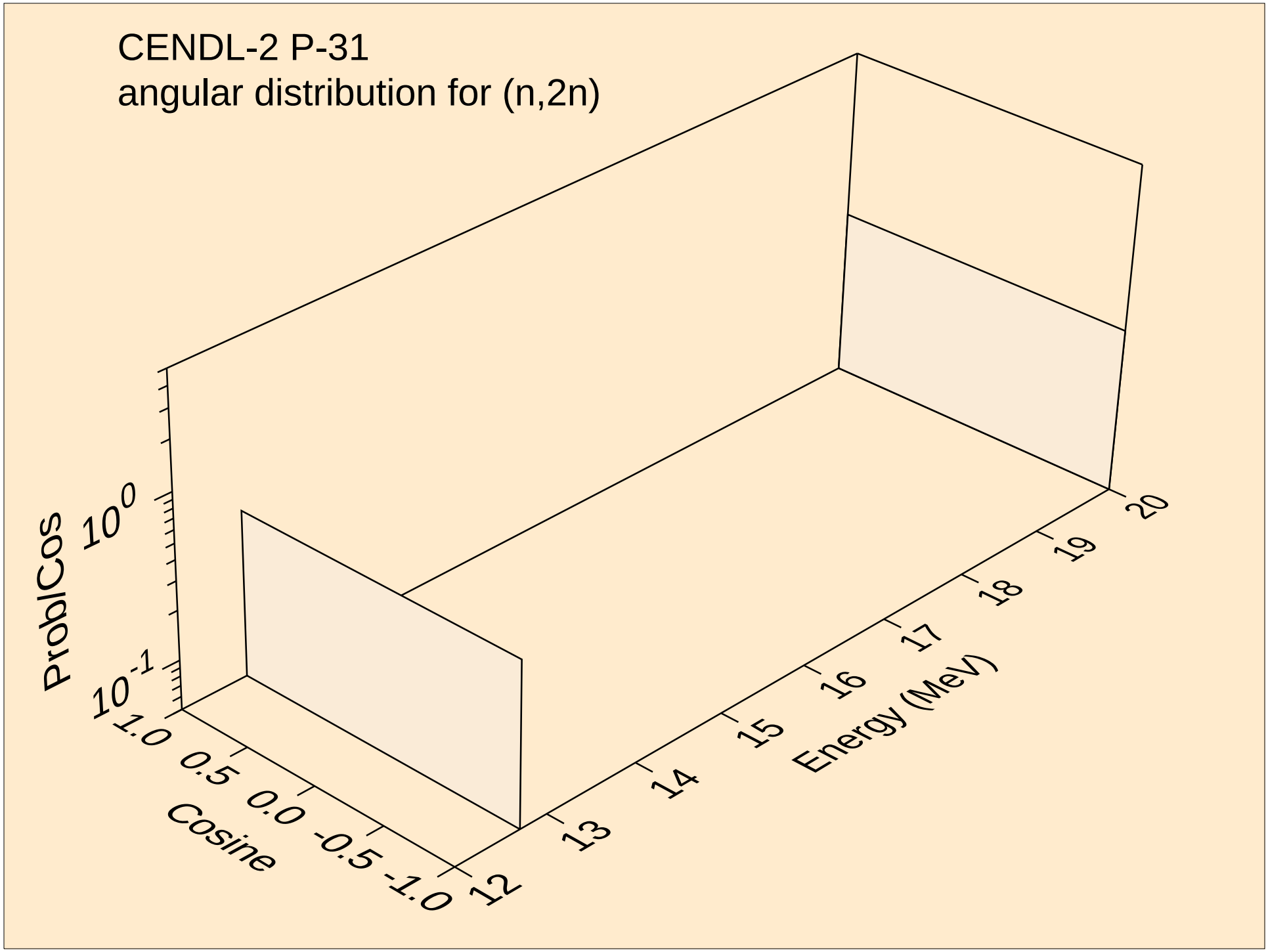
CENDL-2 P-31
angular distribution for (n,2n)
ProbCos
10^{0}
10^{-1}
1.0
0.5
0.0
-0.5
-1.0
Cosine
12
13
14
15
16
17
18
19
20
Energy (MeV)

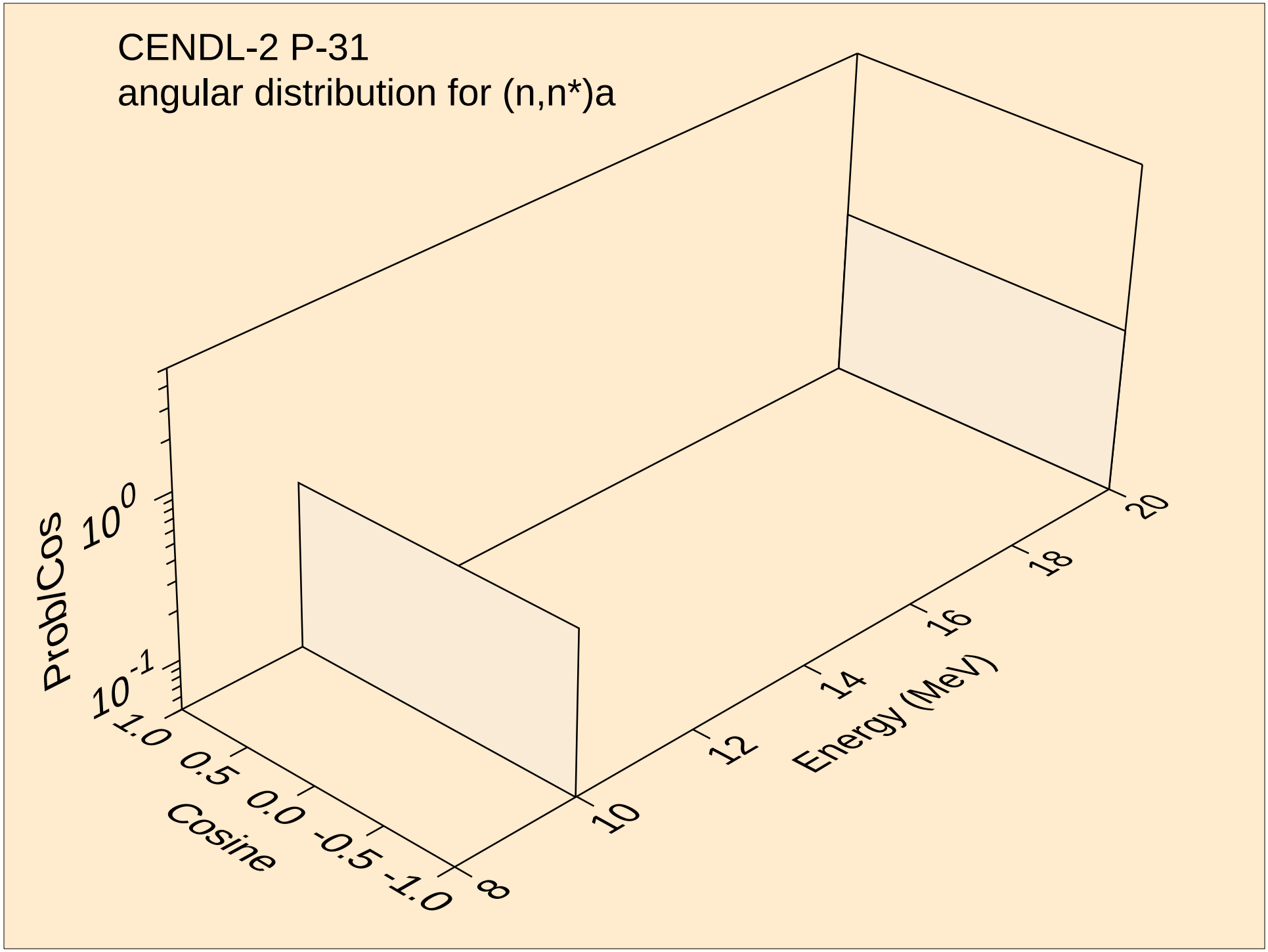
CENDL-2 P-31
angular distribution for (n,n*)a
ProbCos
10^{0}
10^{-1}
1.0
0.5
0.0
-0.5
-1.0
Cosine
8
10
12
14
16
18
20
Energy (MeV)

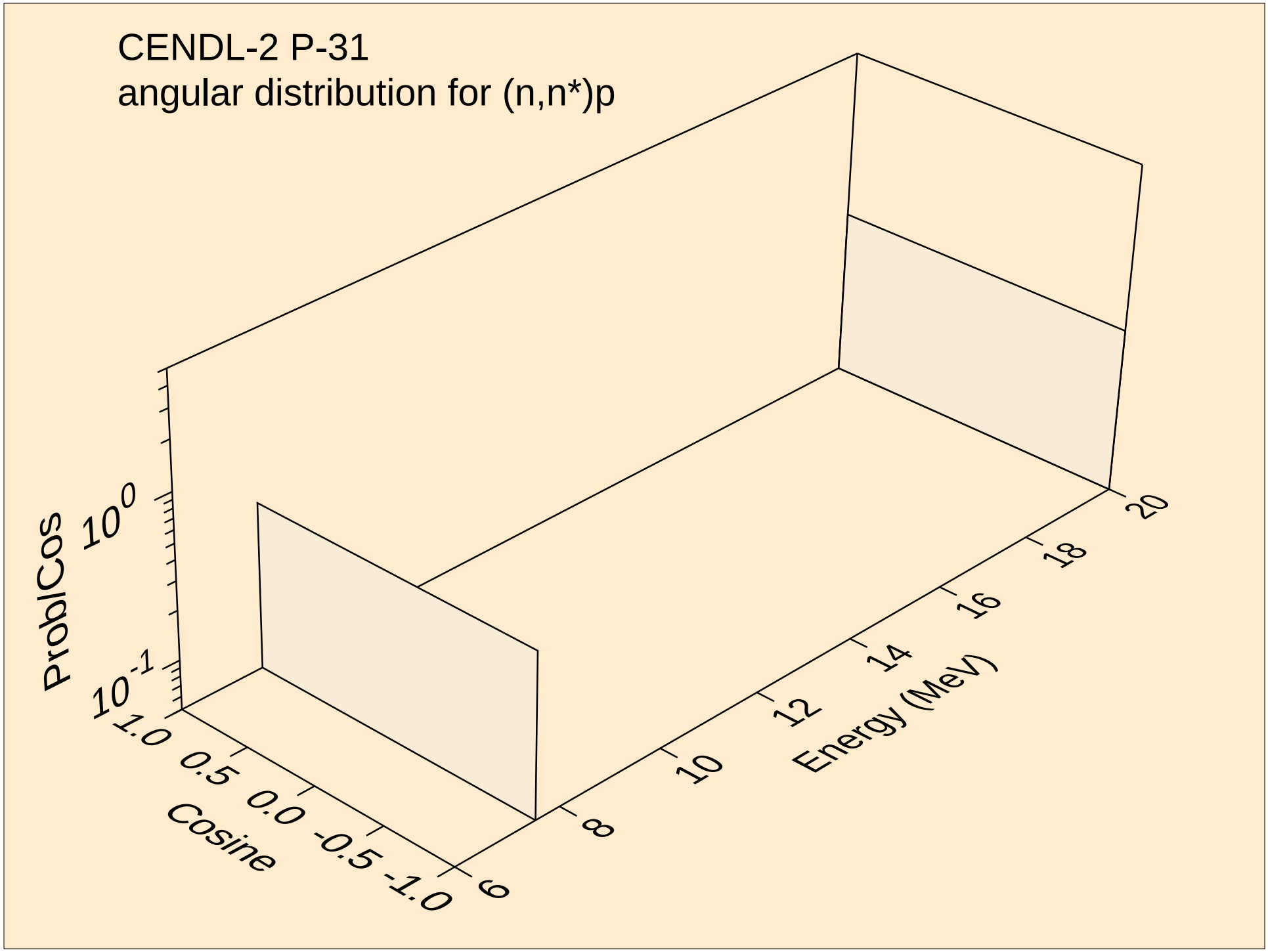
CENDL-2 P-31
angular distribution for (n,n*)p
Prob/Cos
10^{0}
10^{-1}
1.0
0.5
0.0
-0.5
-1.0
Cosine
6
8
10
12
14
16
18
20
Energy (MeV)

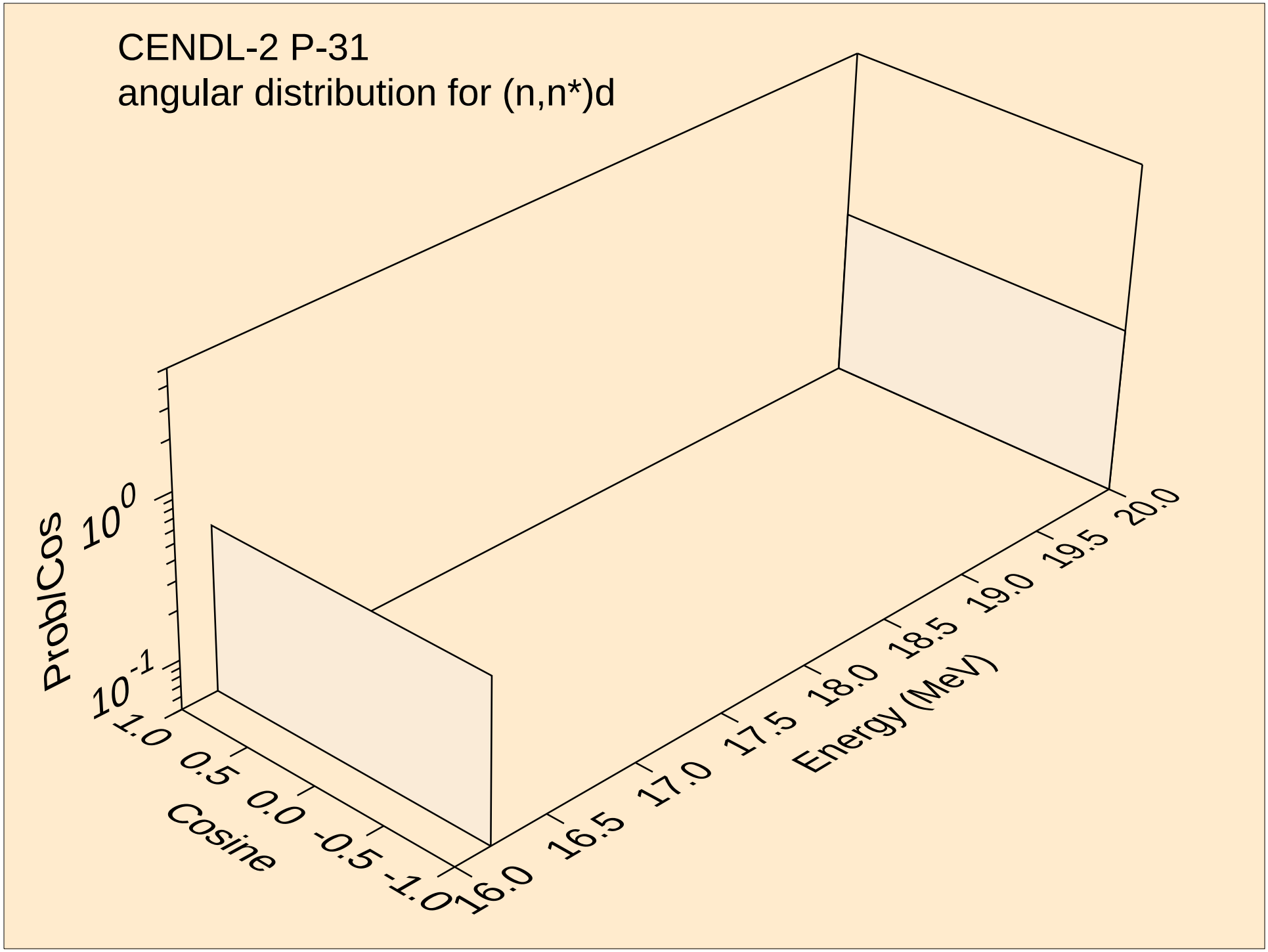
CENDL-2 P-31
angular distribution for (n,n*)d
ProbCos
10^{0}
10^{-1}
1.0
0.5
0.0
-0.5
-1.0
Cosine
16.0
16.5
17.0
17.5
18.0
18.5
19.0
19.5
20.0
Energy (MeV)

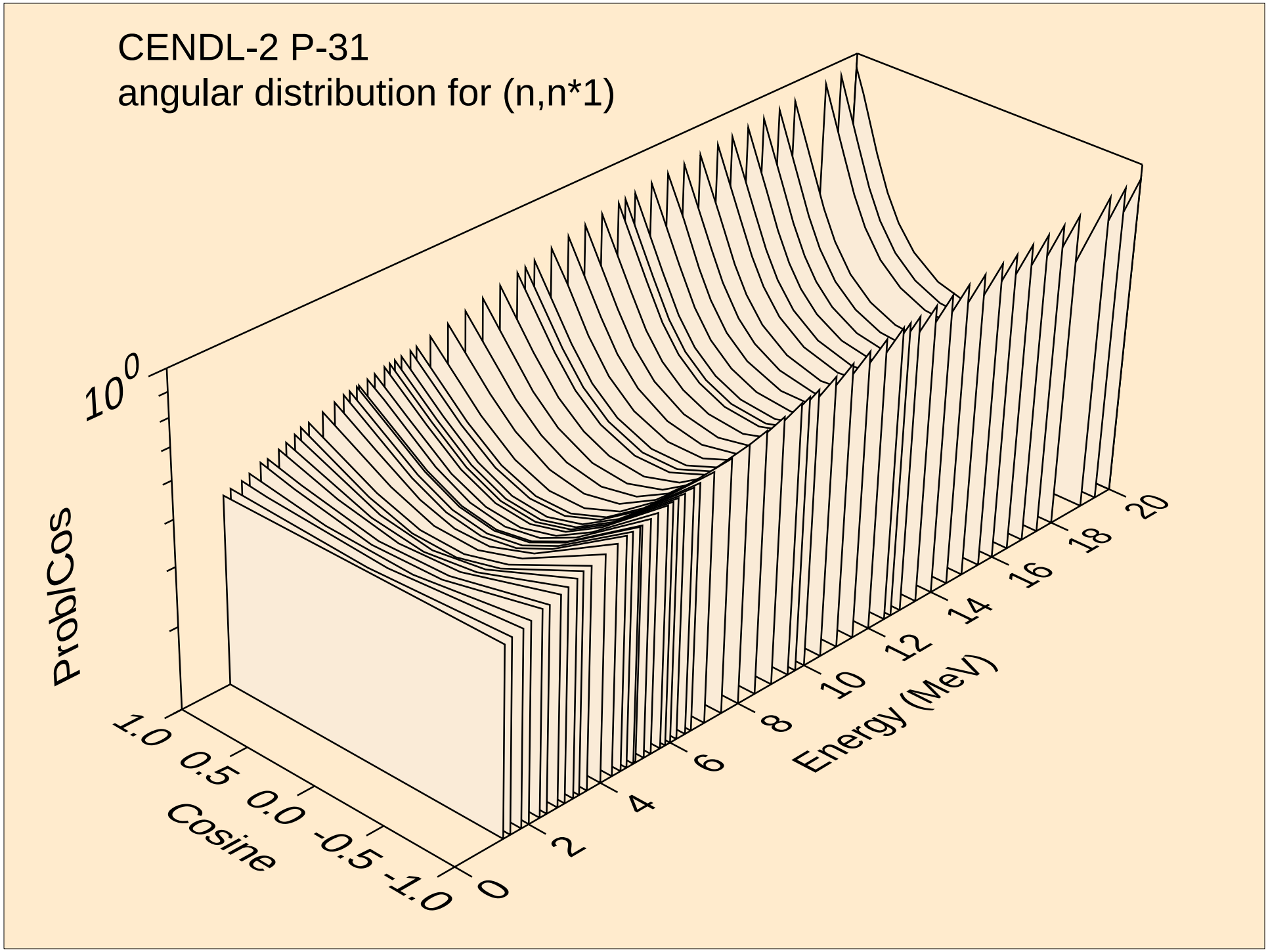
CENDL-2 P-31
angular distribution for (n,n*1)
10^0
ProbCos
1.0
0.5
0.0
-0.5
-1.0
Cosine
0
2
4
6
8
10
12
14
16
18
20
Energy (MeV)

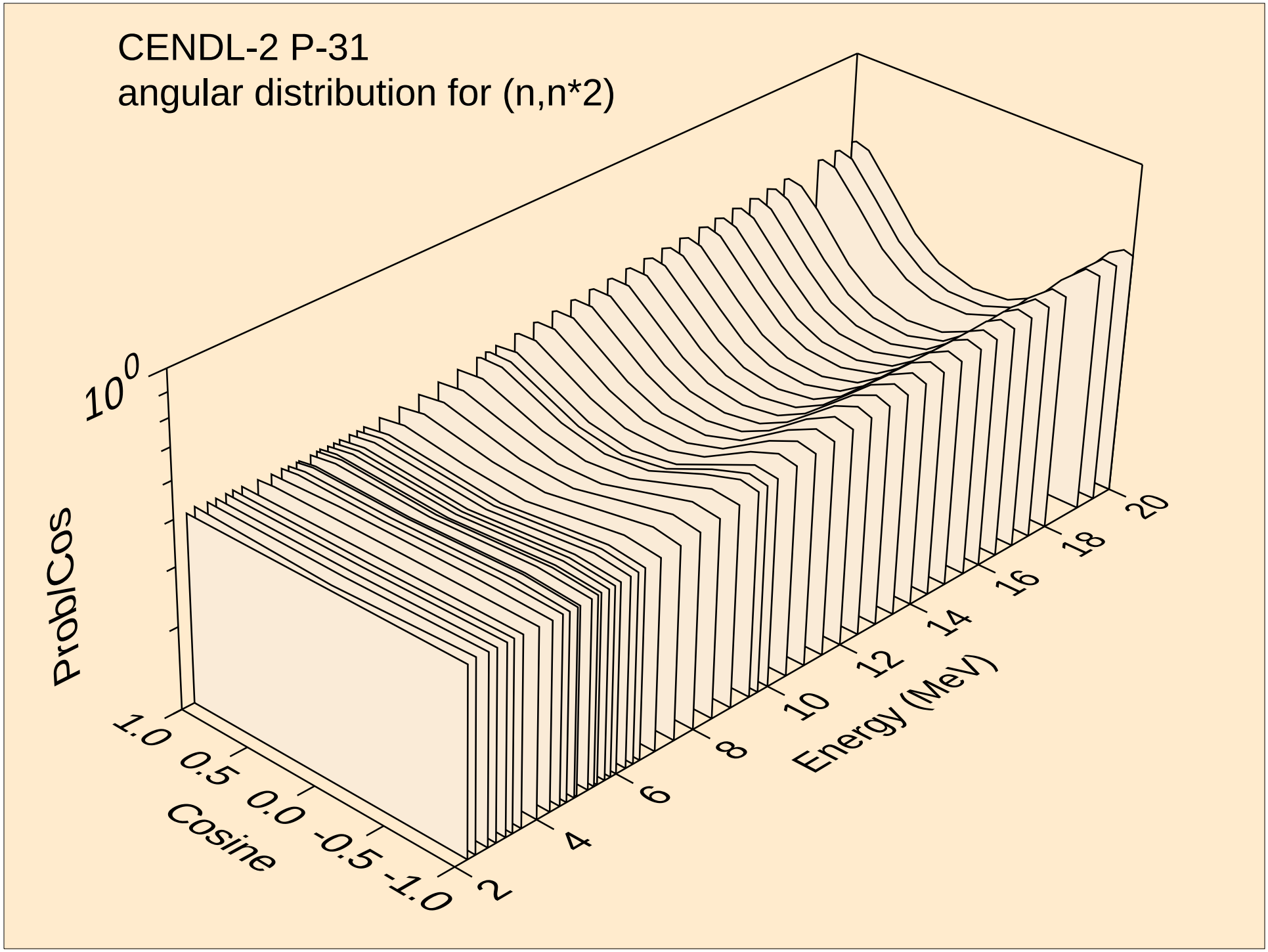
CENDL-2 P-31
angular distribution for (n,n*2)
10^0
ProbCos
1.0
0.5
0.0
-0.5
-1.0
Cosine
2
4
6
8
10
12
14
16
18
20
Energy (MeV)

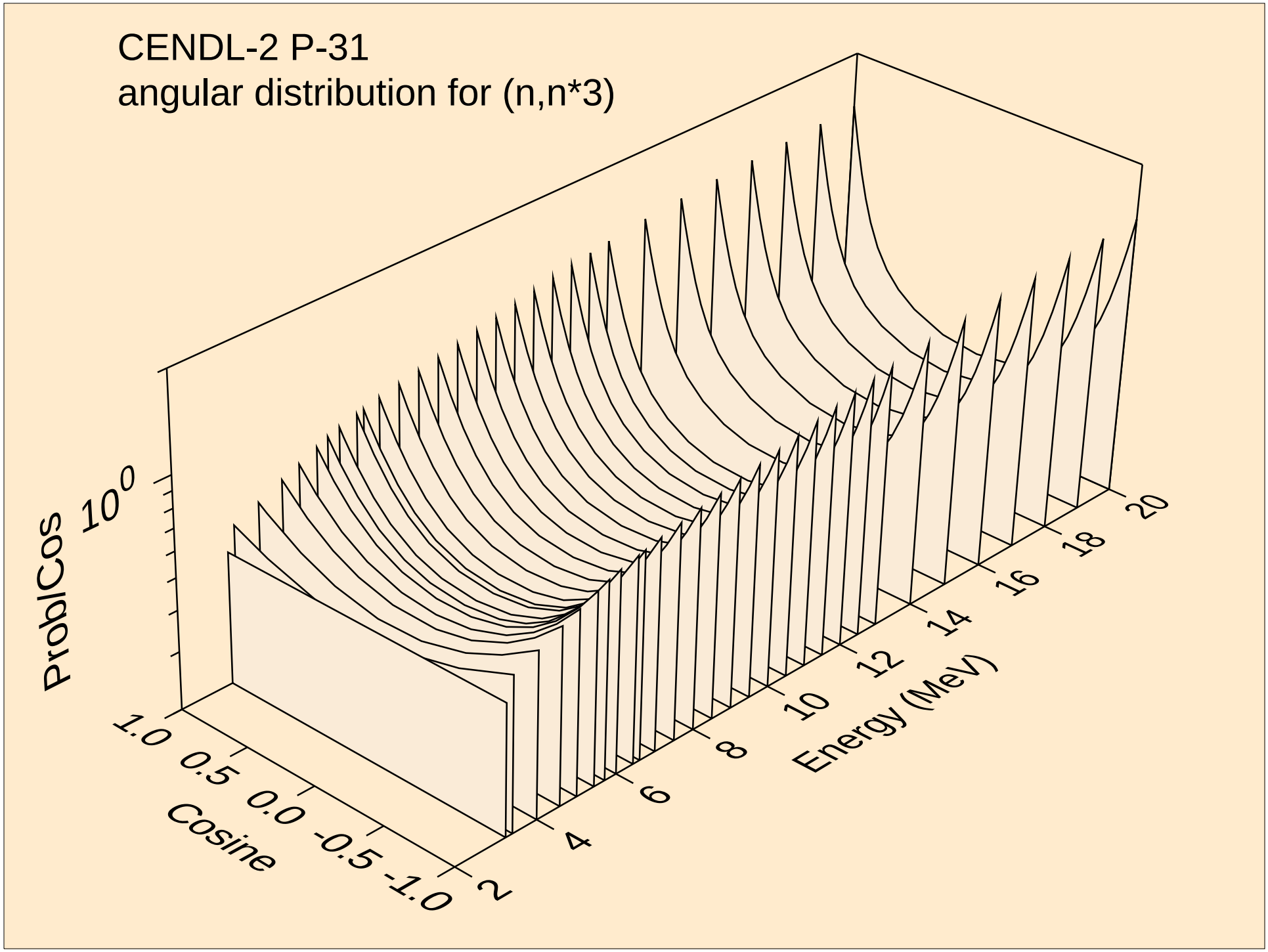
CENDL-2 P-31
angular distribution for (n,n*3)
ProblCos
10^0
1.0
0.5
0.0
-0.5
-1.0
Cosine
2
4
6
8
10
12
14
16
18
20
Energy (MeV)

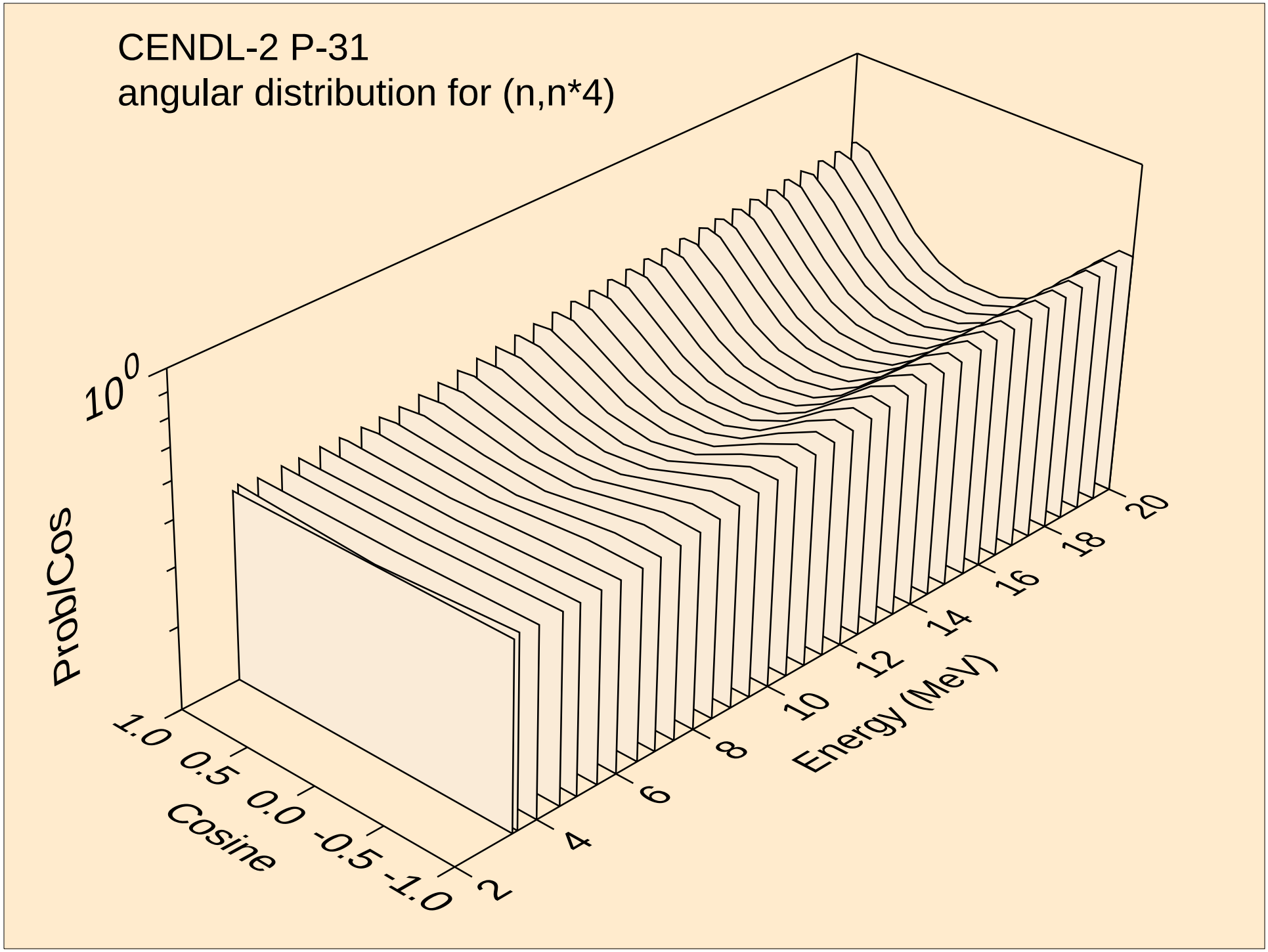
CENDL-2 P-31
angular distribution for (n,n*4)
10^0
ProbCos
1.0
0.5
0.0
-0.5
-1.0
Cosine
2
4
6
8
10
12
14
16
18
20
Energy (MeV)

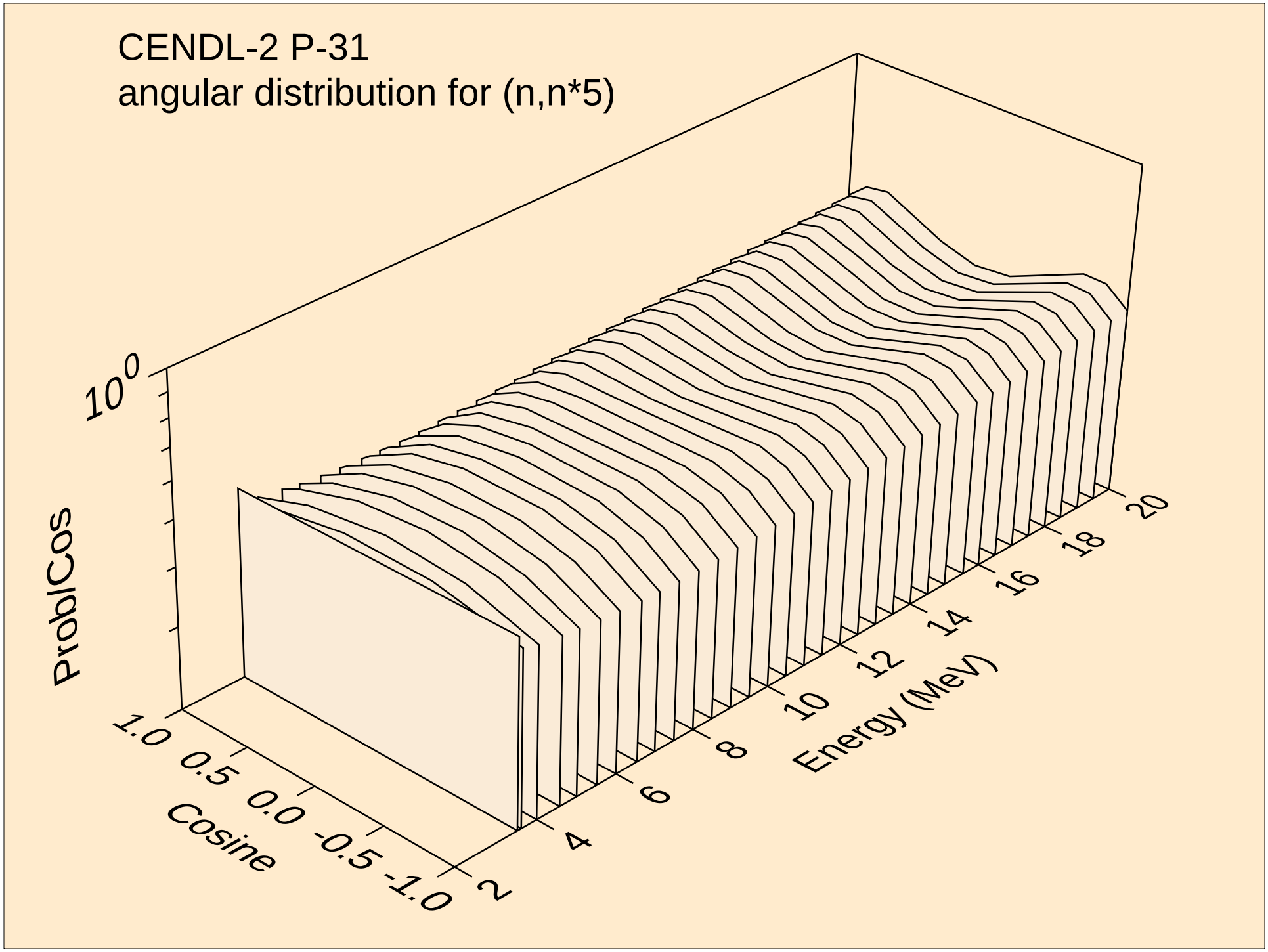
CENDL-2 P-31
angular distribution for (n,n*5)
10^0
ProbCos
1.0
0.5
0.0
-0.5
-1.0
Cosine
2
4
6
8
10
12
14
16
18
20
Energy (MeV)

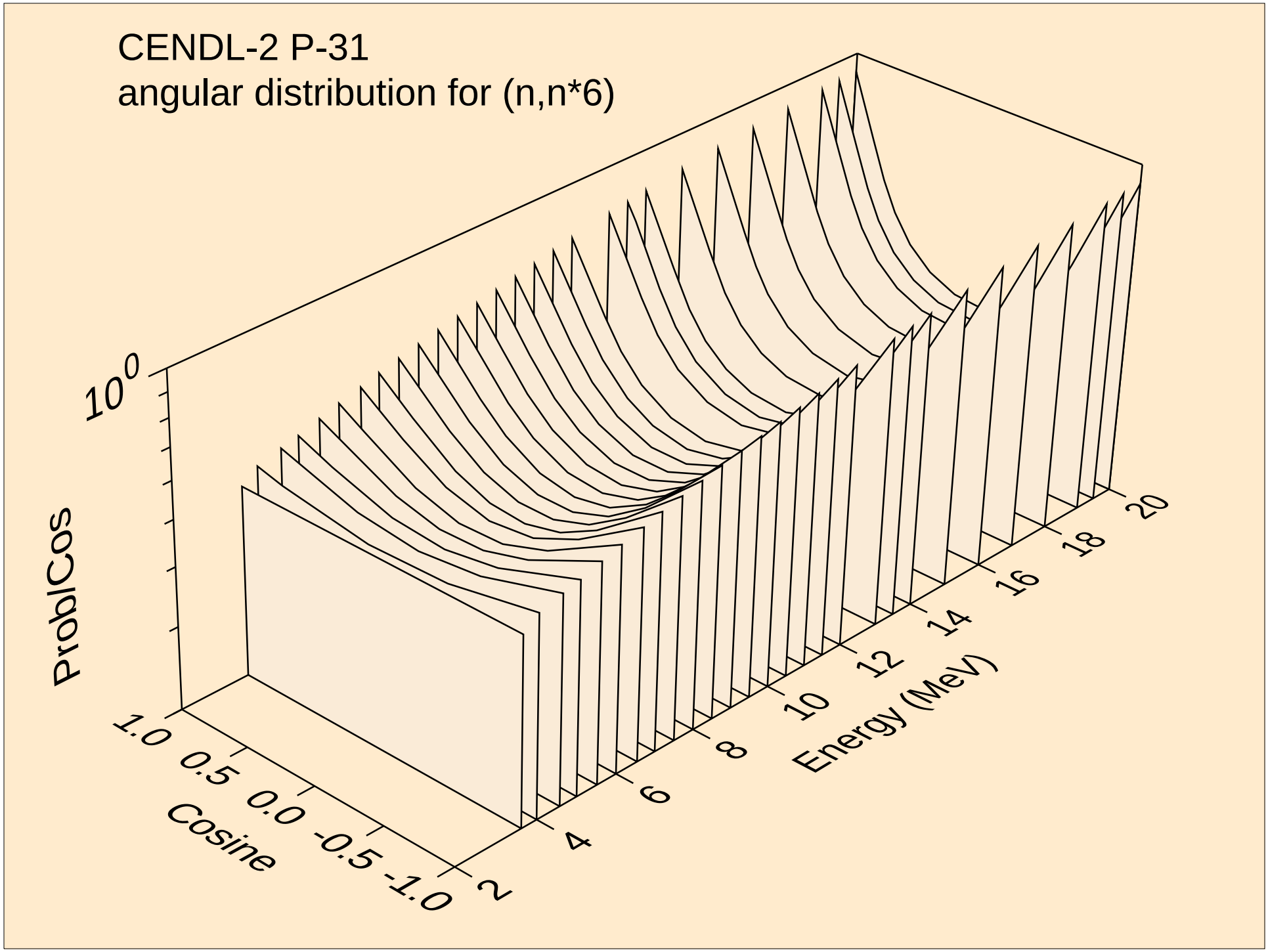
CENDL-2 P-31
angular distribution for (n,n*6)
10^0
ProbCos
1.0
0.5
0.0
-0.5
-1.0
Cosine
2
4
6
8
10
12
14
16
18
20
Energy (MeV)

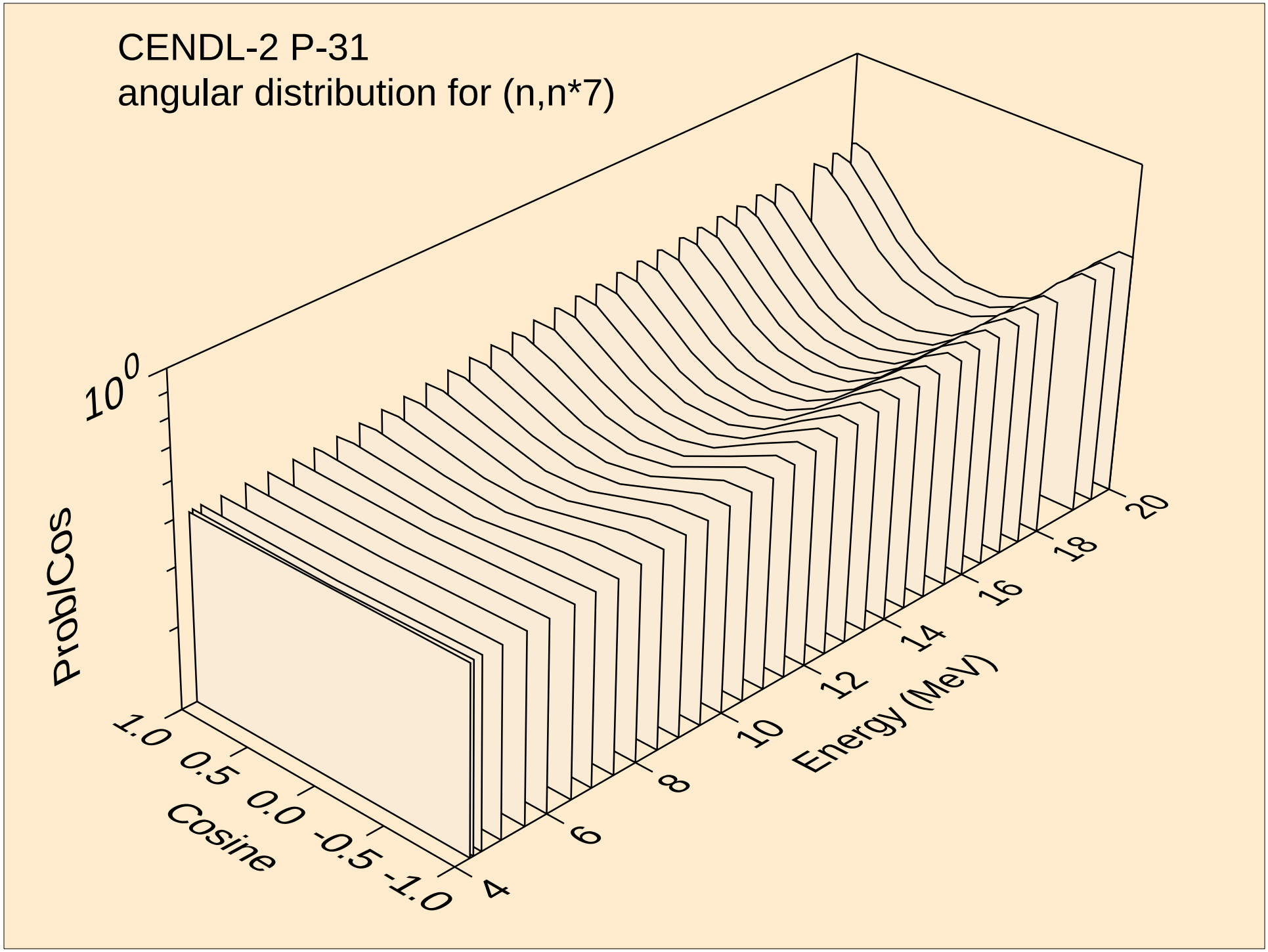
CENDL-2 P-31
angular distribution for (n,n*7)
10^0
ProbCos
1.0
0.5
0.0
-0.5
-1.0
Cosine
4
6
8
10
12
14
16
18
20
Energy (MeV)

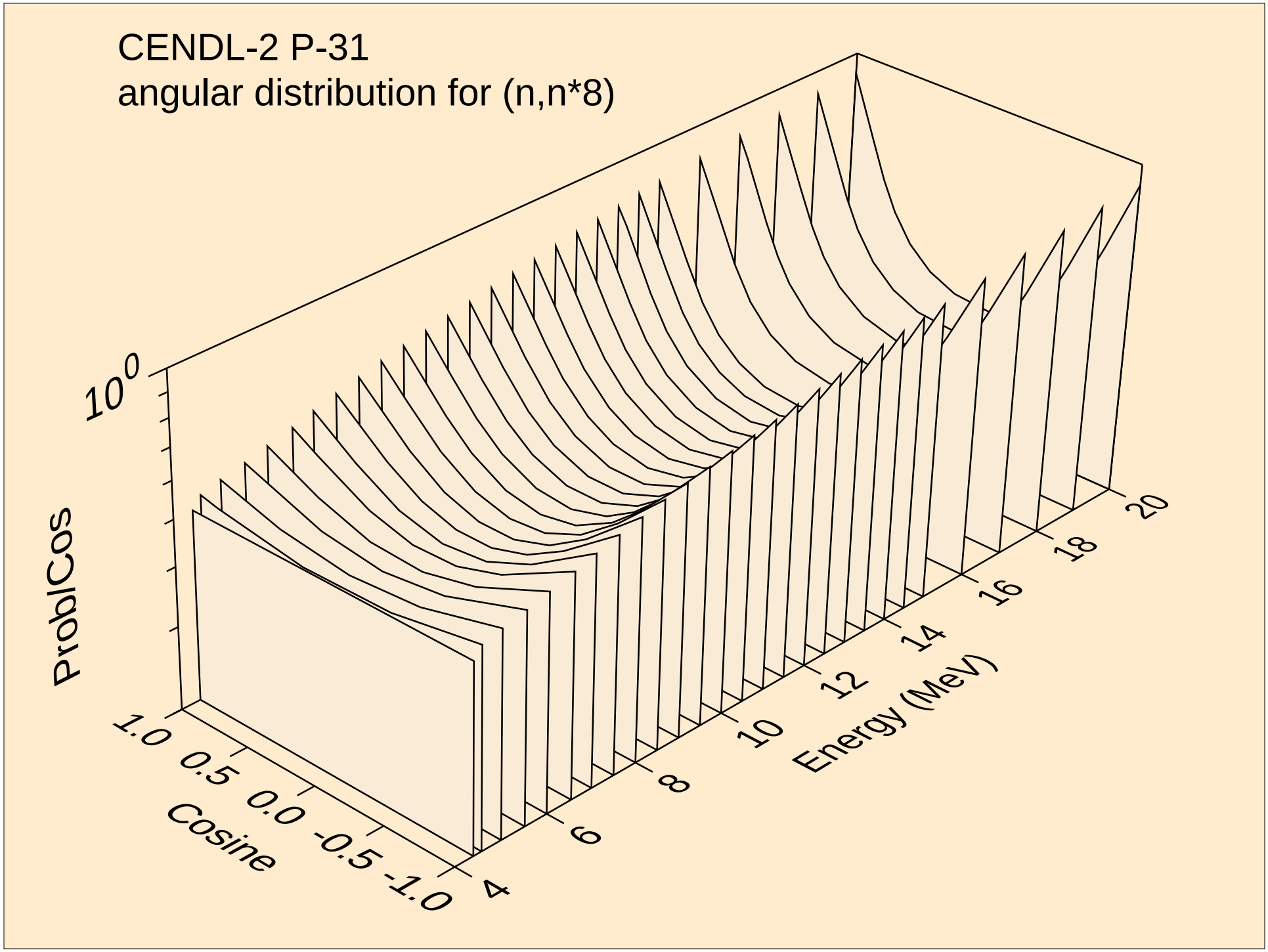
CENDL-2 P-31
angular distribution for (n,n*8)
10^0
ProbCos
1.0
0.5
0.0
-0.5
-1.0
Cosine
4
6
8
10
12
14
16
18
20
Energy (MeV)

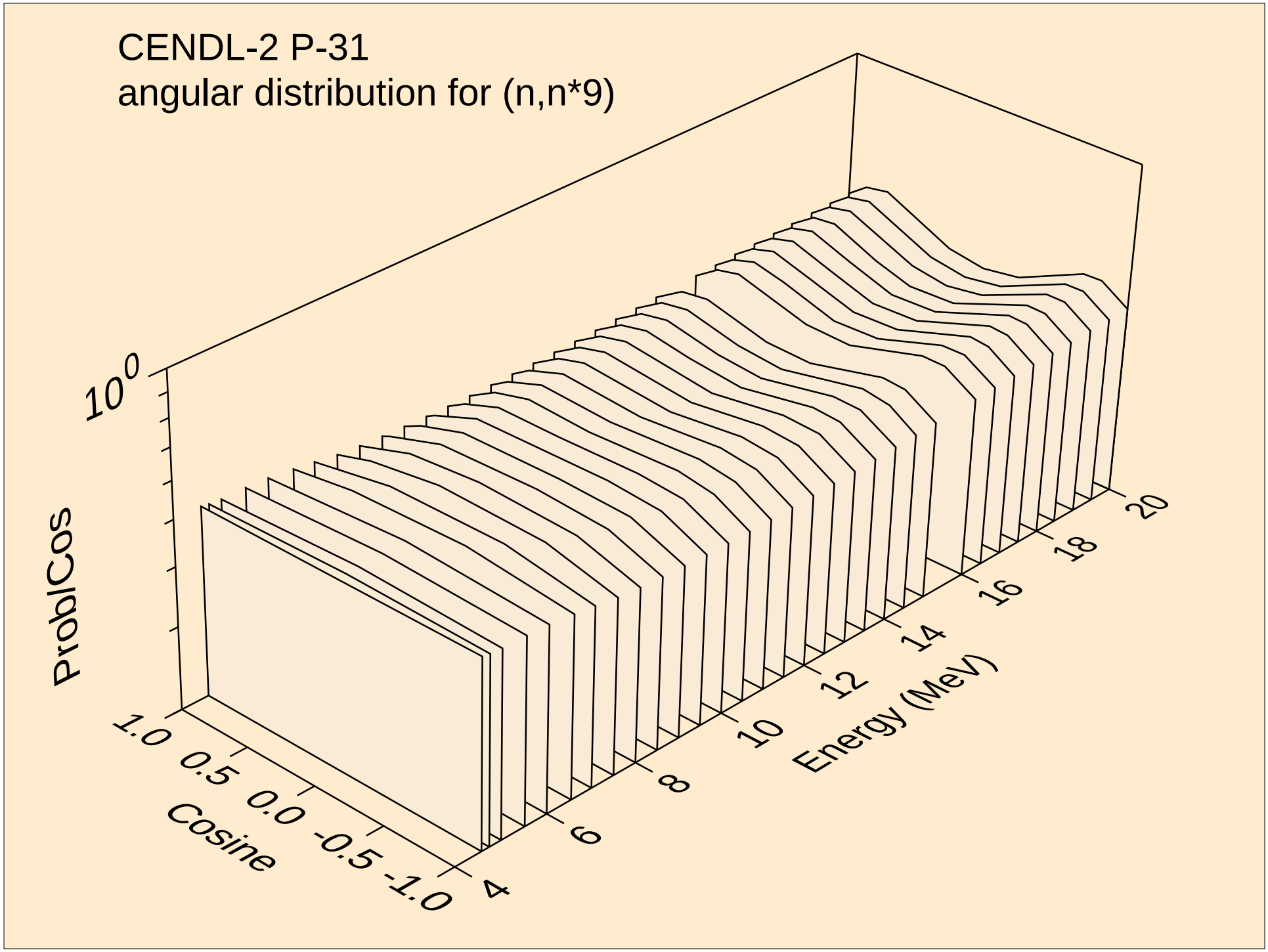
CENDL-2 P-31
angular distribution for (n,n*9)
10^0
ProbCos
1.0
0.5
0.0
-0.5
-1.0
Cosine
4
6
8
10
12
14
16
18
20
Energy (MeV)

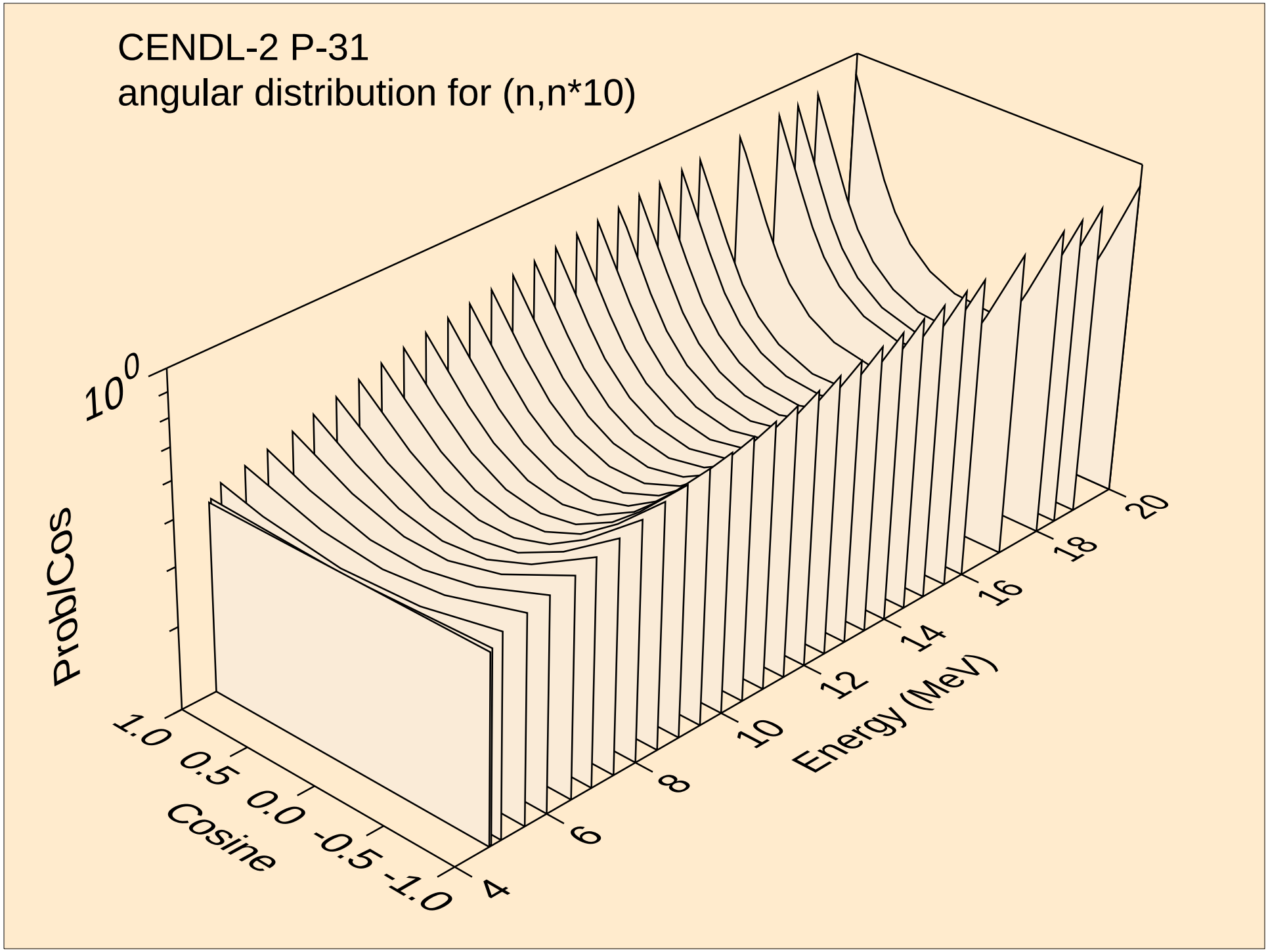
CENDL-2 P-31
angular distribution for (n,n*10)
10^0
ProbCos
1.0
0.5
0.0
-0.5
-1.0
Cosine
4
6
8
10
12
14
16
18
20
Energy (MeV)

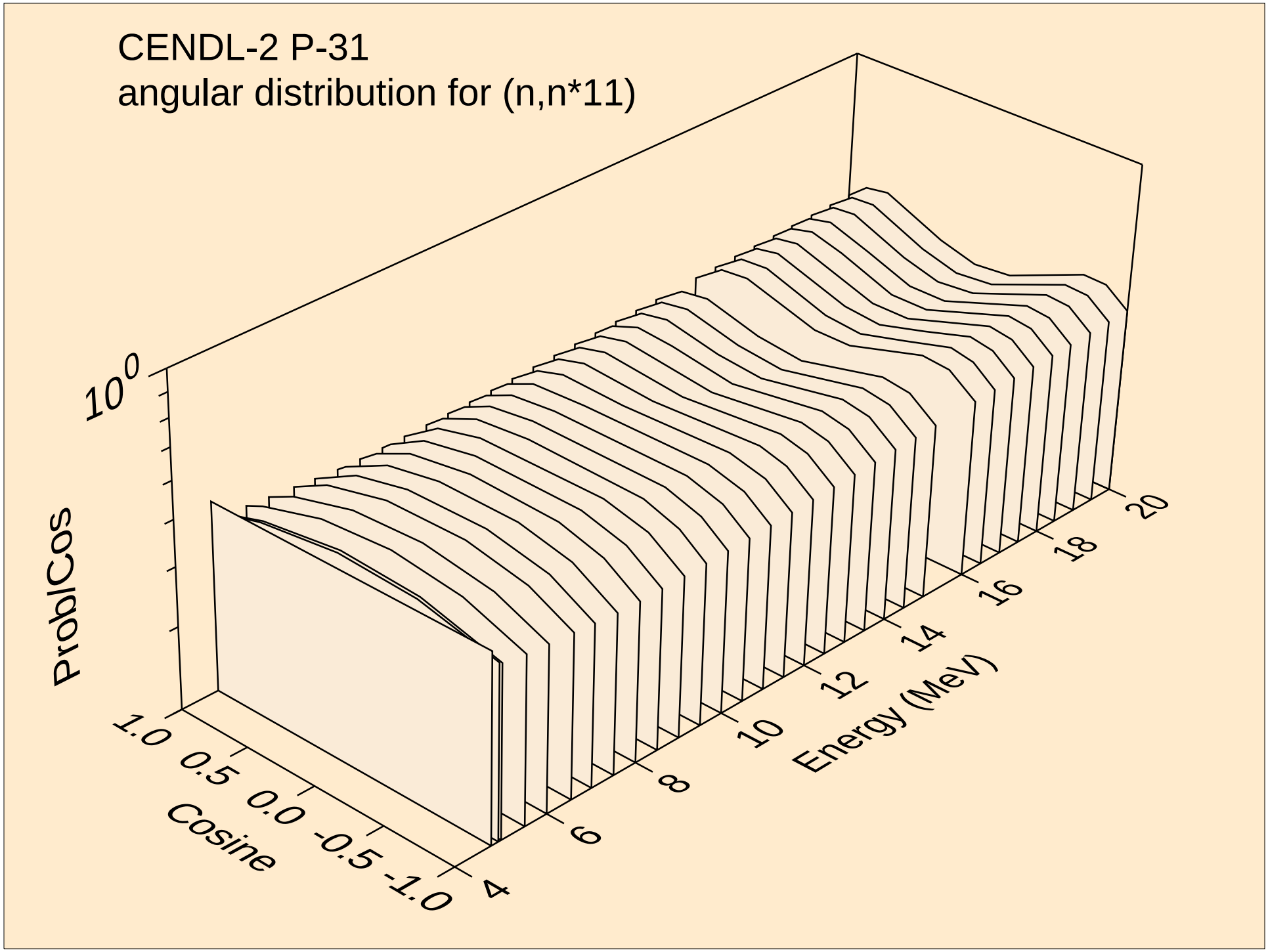
CENDL-2 P-31
angular distribution for (n,n*11)
10^0
ProbCos
1.0
0.5
0.0
-0.5
-1.0
Cosine
4
6
8
10
12
14
16
18
20
Energy (MeV)

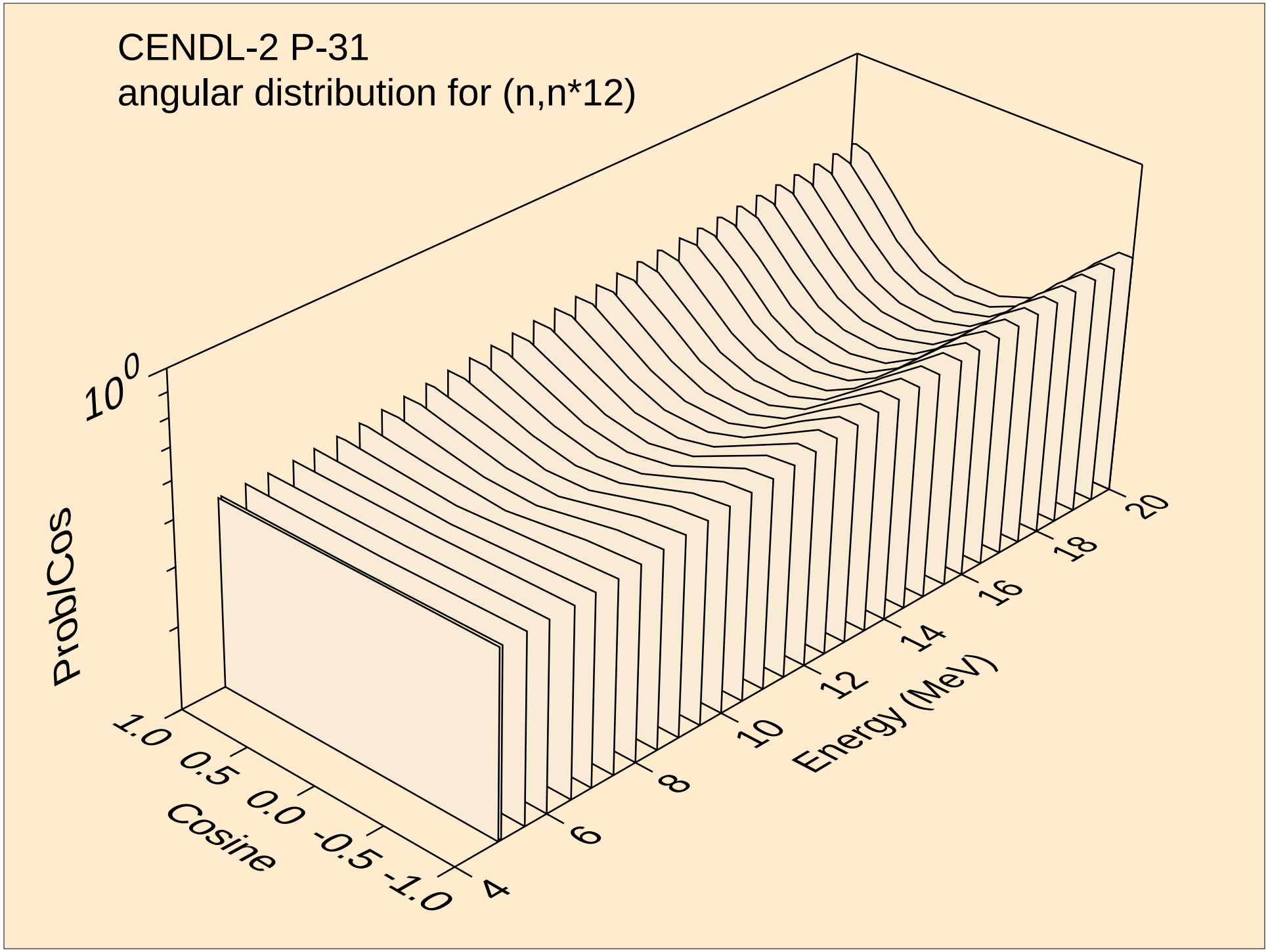
CENDL-2 P-31
angular distribution for (n,n*12)
10^0
ProbCos
1.0
0.5
0.0
-0.5
-1.0
Cosine
4
6
8
10
12
14
16
18
20
Energy (MeV)

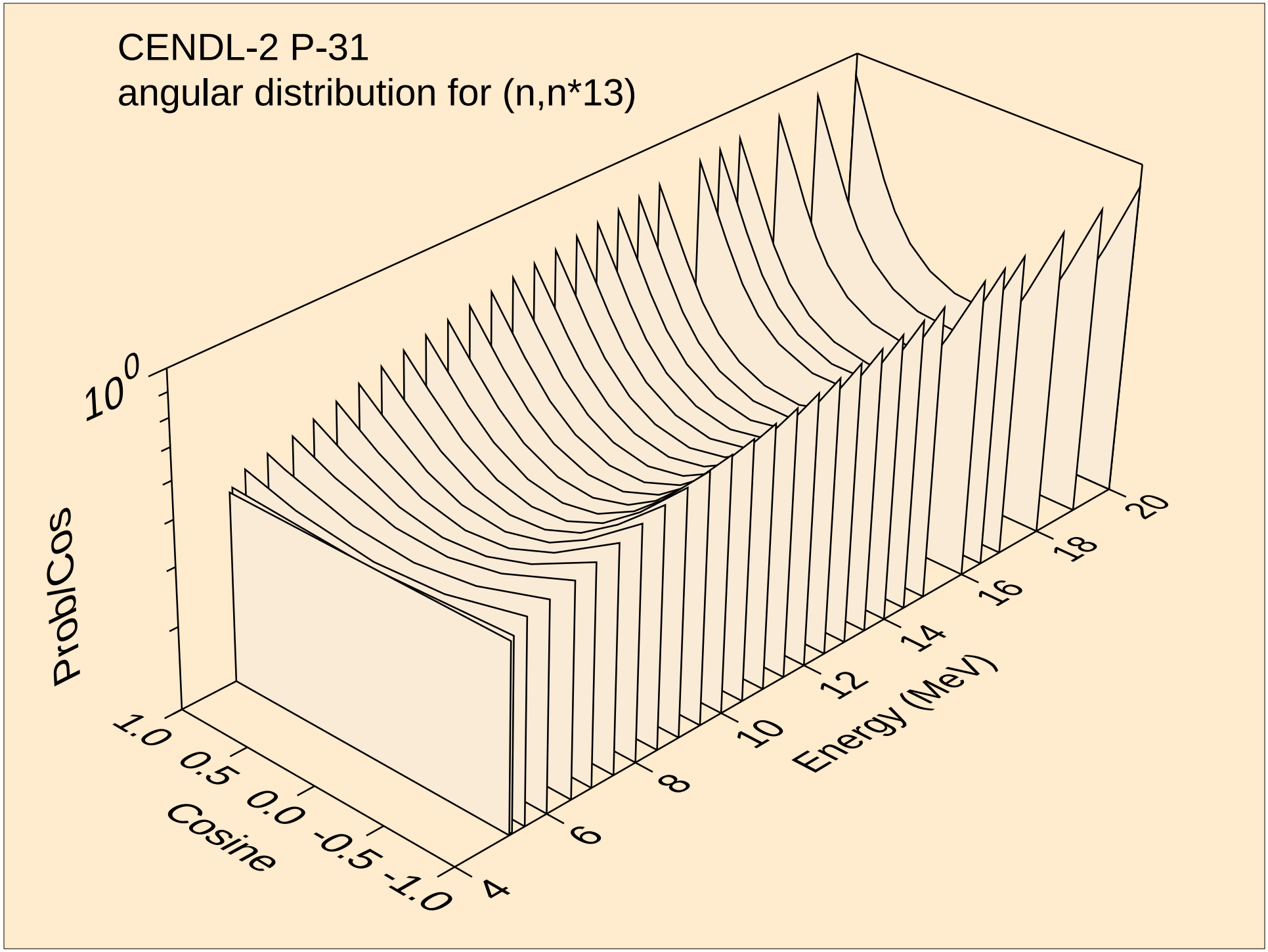
CENDL-2 P-31
angular distribution for (n,n*13)
10^0
ProbCos
1.0
0.5
0.0
-0.5
-1.0
Cosine
4
6
8
10
12
14
16
18
20
Energy (MeV)

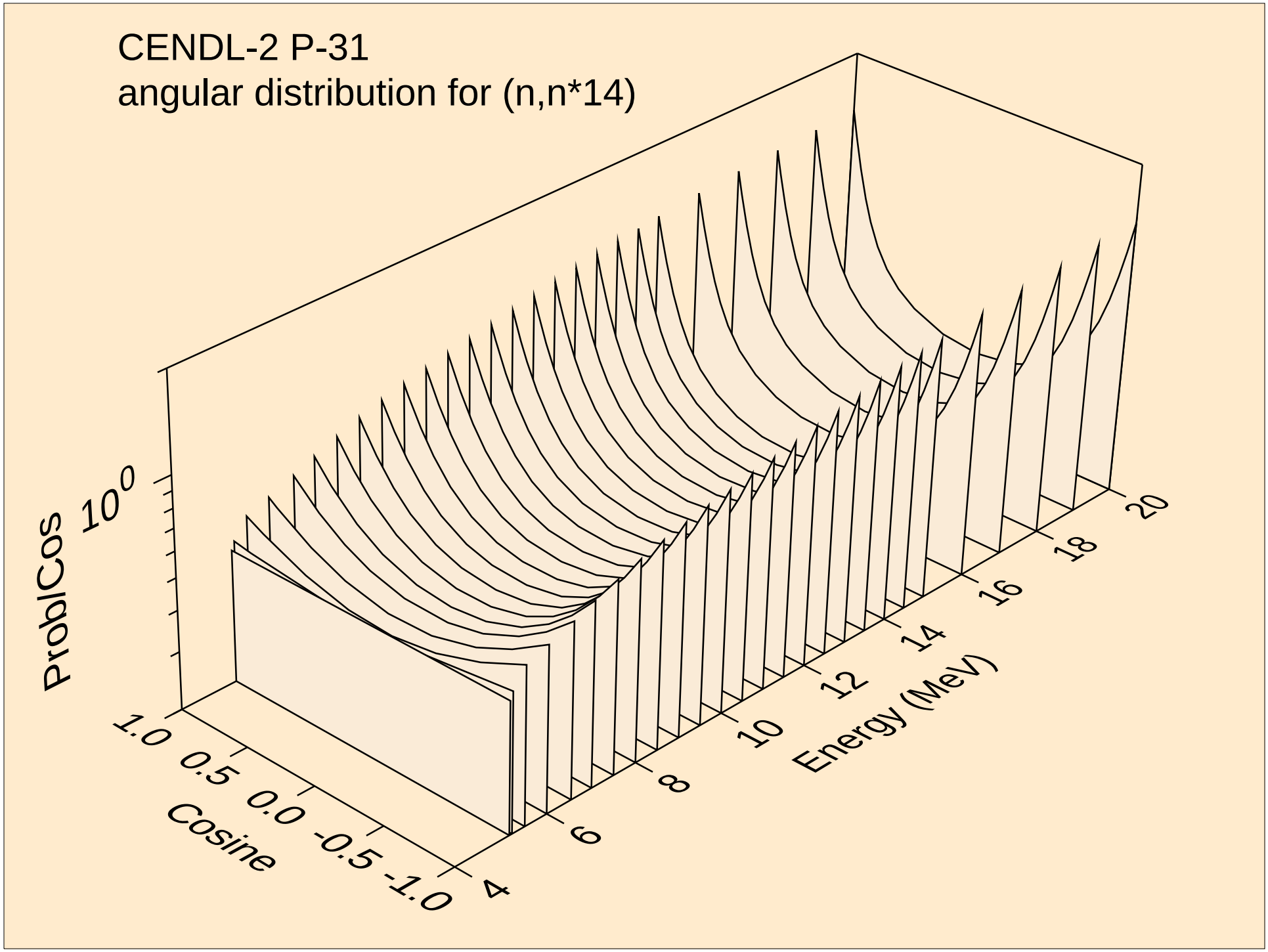
CENDL-2 P-31
angular distribution for (n,n*14)
ProblCos
10^0
1.0
0.5
0.0
-0.5
-1.0
Cosine
4
6
8
10
12
14
16
18
20
Energy (MeV)

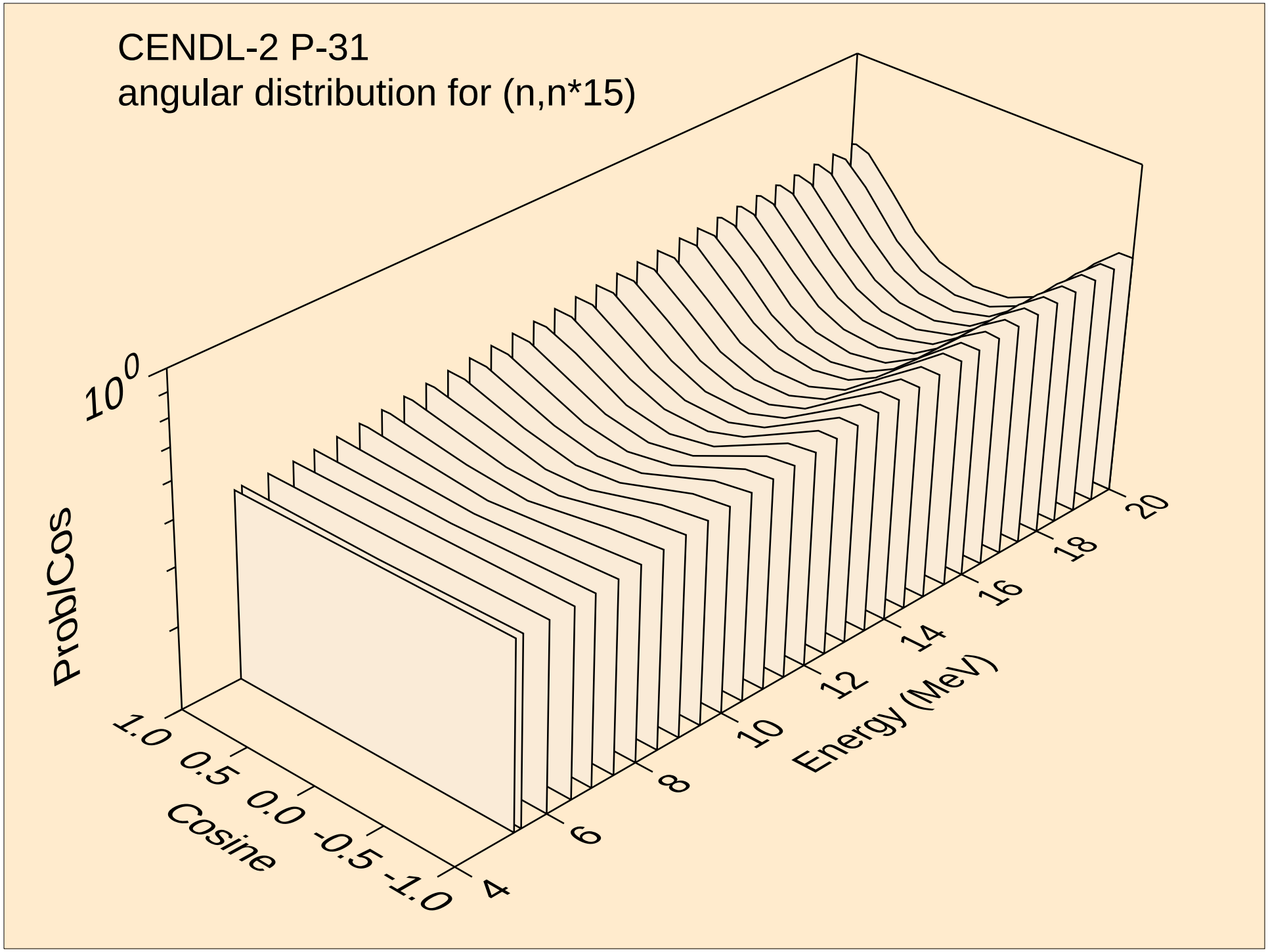
CENDL-2 P-31
angular distribution for (n,n*15)
10^0
ProbCos
1.0
0.5
0.0
-0.5
-1.0
Cosine
4
6
8
10
12
14
16
18
20
Energy (MeV)

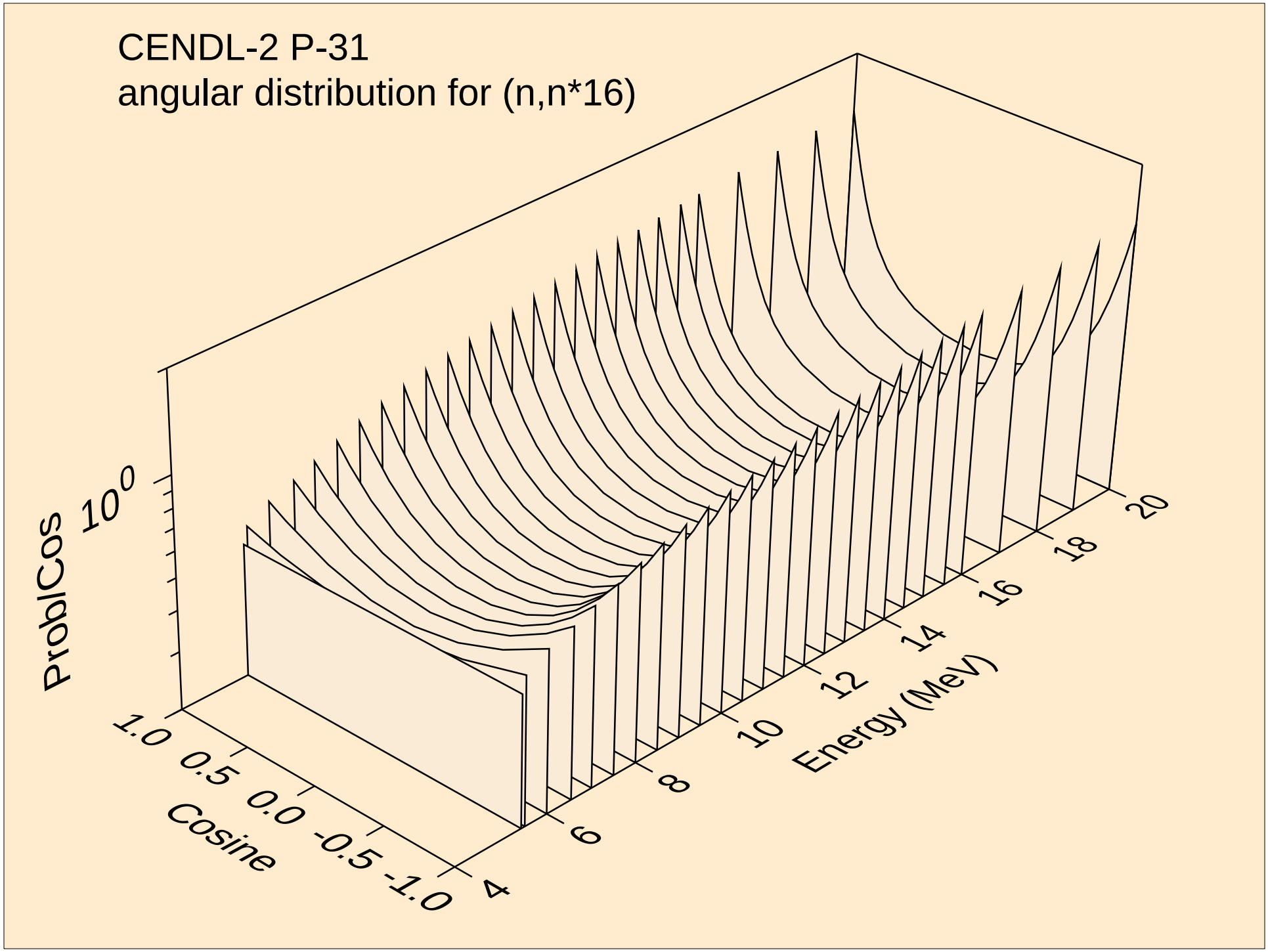
CENDL-2 P-31
angular distribution for (n,n*16)
ProblCos
10^0
1.0
0.5
0.0
-0.5
-1.0
Cosine
4
6
8
10
12
14
16
18
20
Energy (MeV)

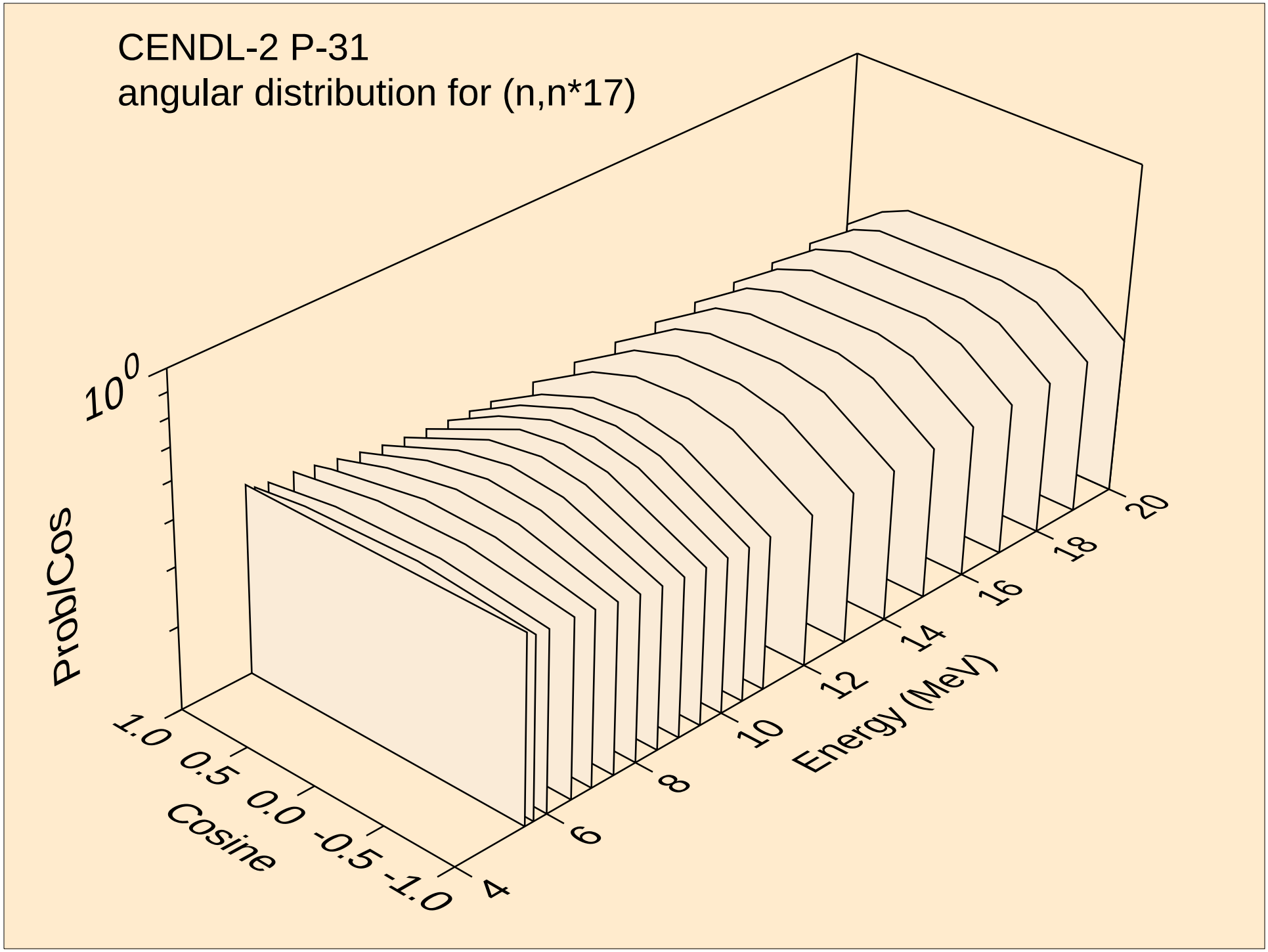
CENDL-2 P-31
angular distribution for (n,n*17)
10^0
ProbCos
1.0
0.5
0.0
-0.5
-1.0
Cosine
4
6
8
10
12
14
16
18
20
Energy (MeV)

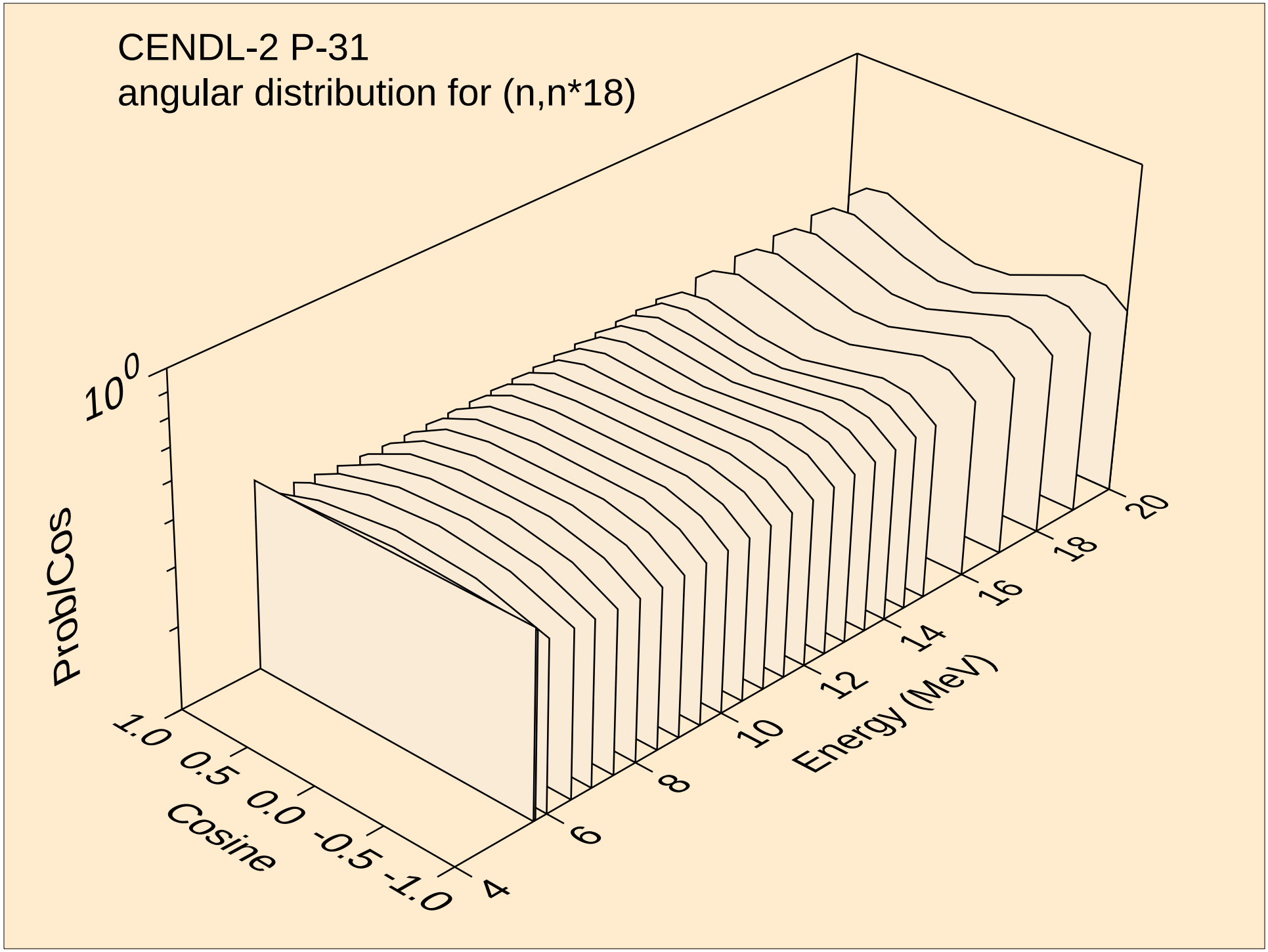
CENDL-2 P-31
angular distribution for (n,n*18)
10^0
ProbCos
1.0
0.5
0.0
-0.5
-1.0
Cosine
4
6
8
10
12
14
16
18
20
Energy (MeV)

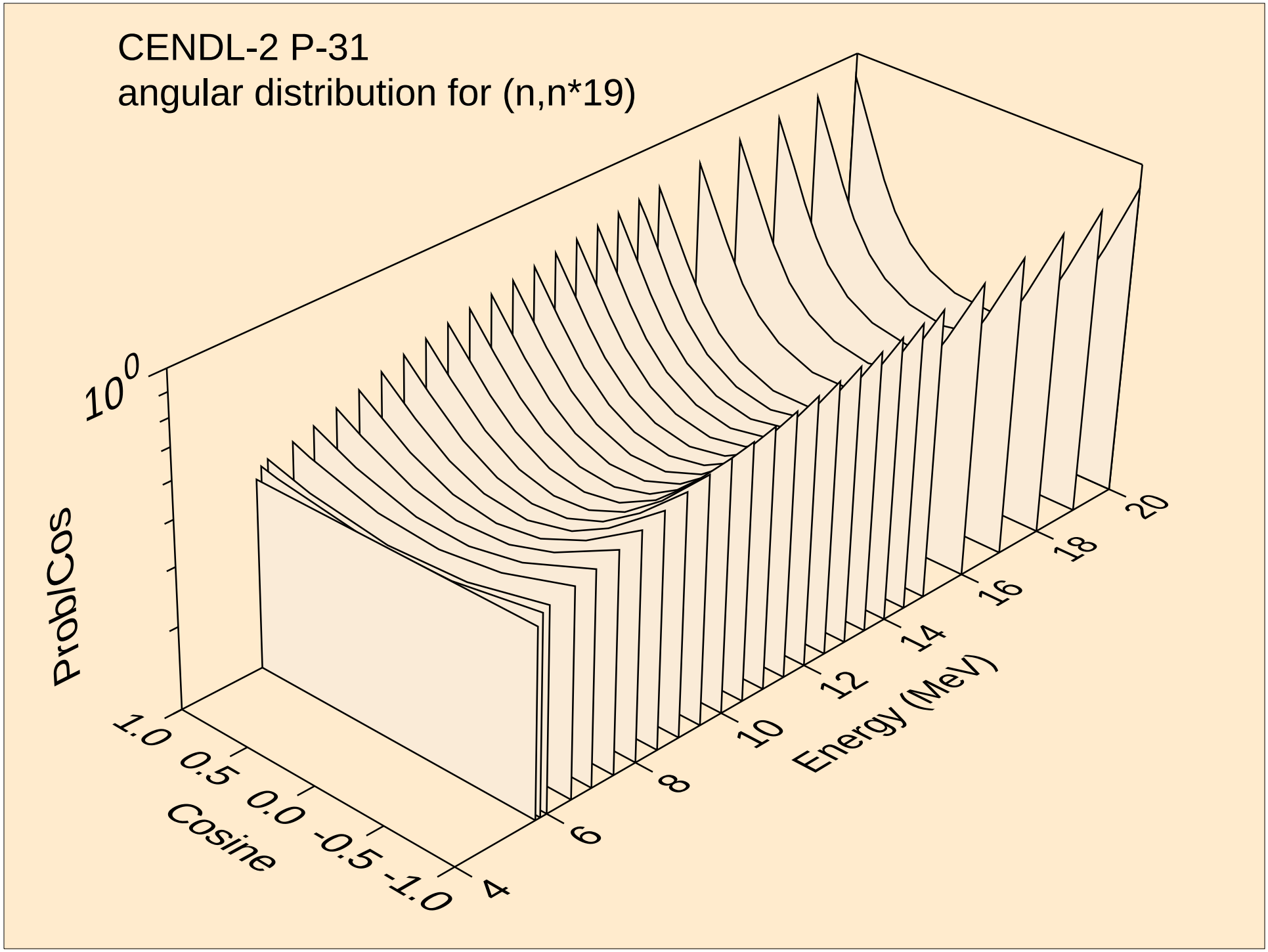
CENDL-2 P-31
angular distribution for (n,n*19)
10^0
ProbCos
1.0
0.5
0.0
-0.5
-1.0
Cosine
4
6
8
10
12
14
16
18
20
Energy (MeV)

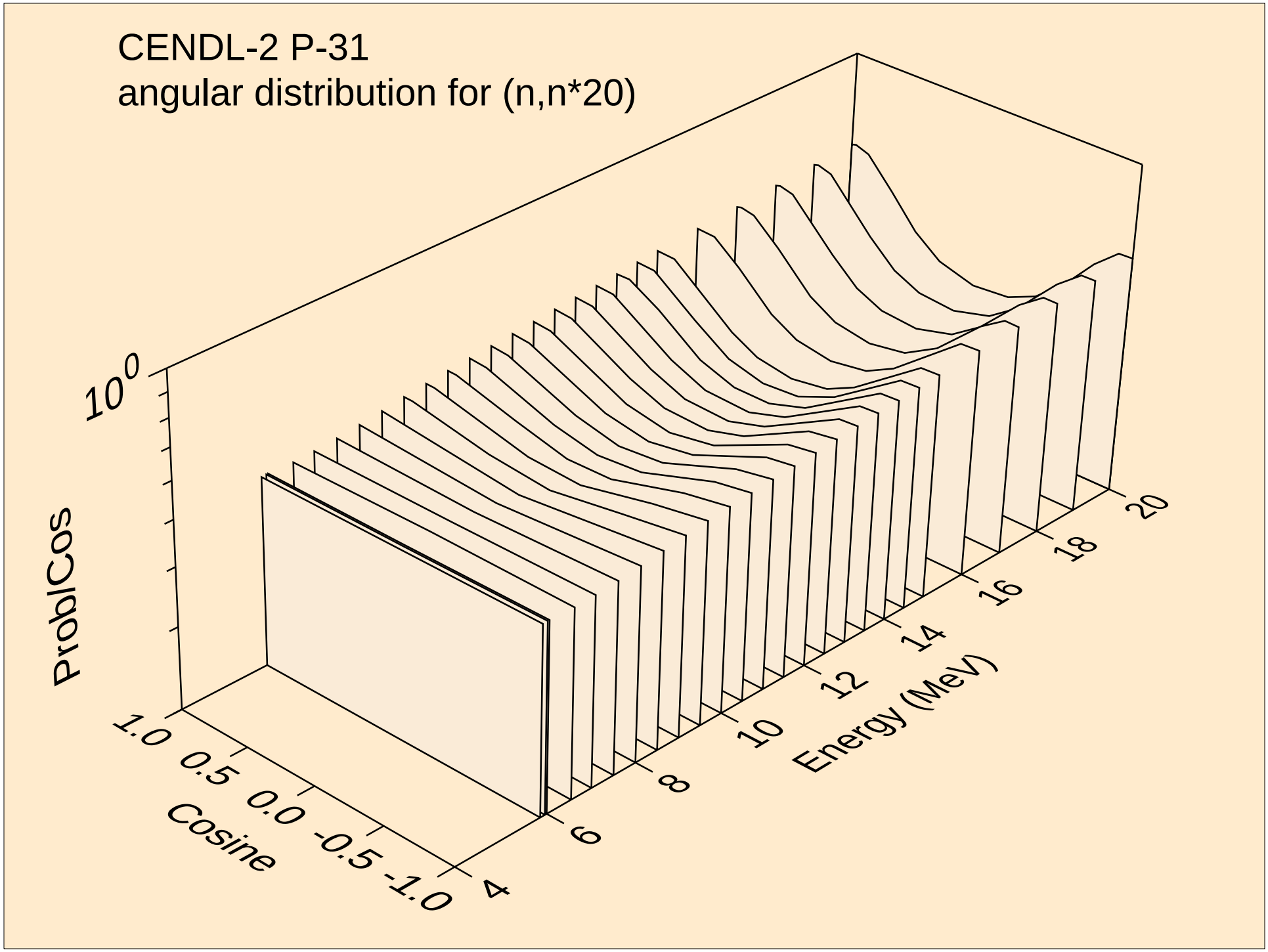
CENDL-2 P-31
angular distribution for (n,n*20)
10^0
ProbCos
1.0
0.5
0.0
-0.5
-1.0
Cosine
4
6
8
10
12
14
16
18
20
Energy (MeV)

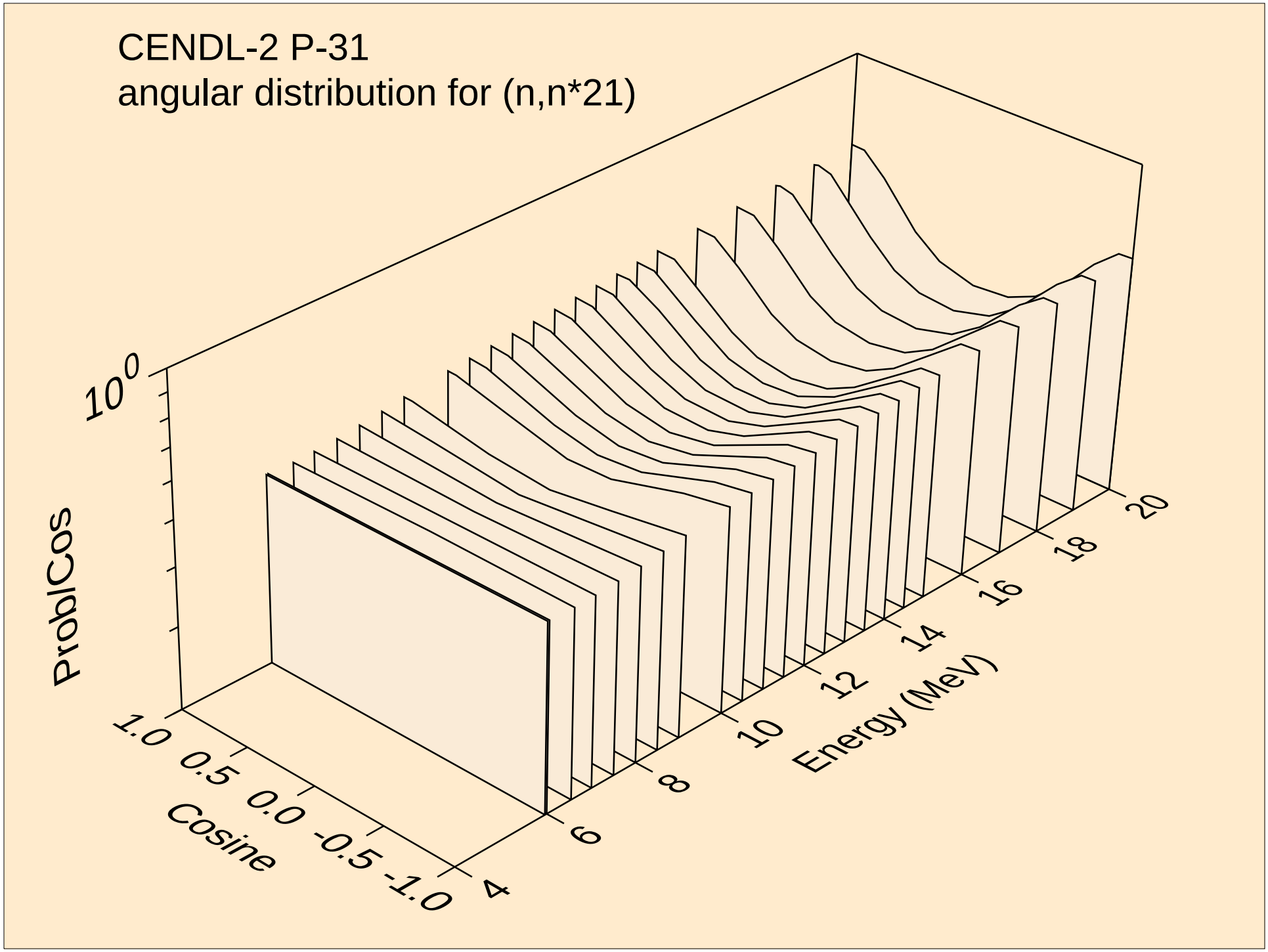
CENDL-2 P-31
angular distribution for (n,n*21)
10^0
ProbCos
1.0
0.5
0.0
-0.5
-1.0
Cosine
4
6
8
10
12
14
16
18
20
Energy (MeV)

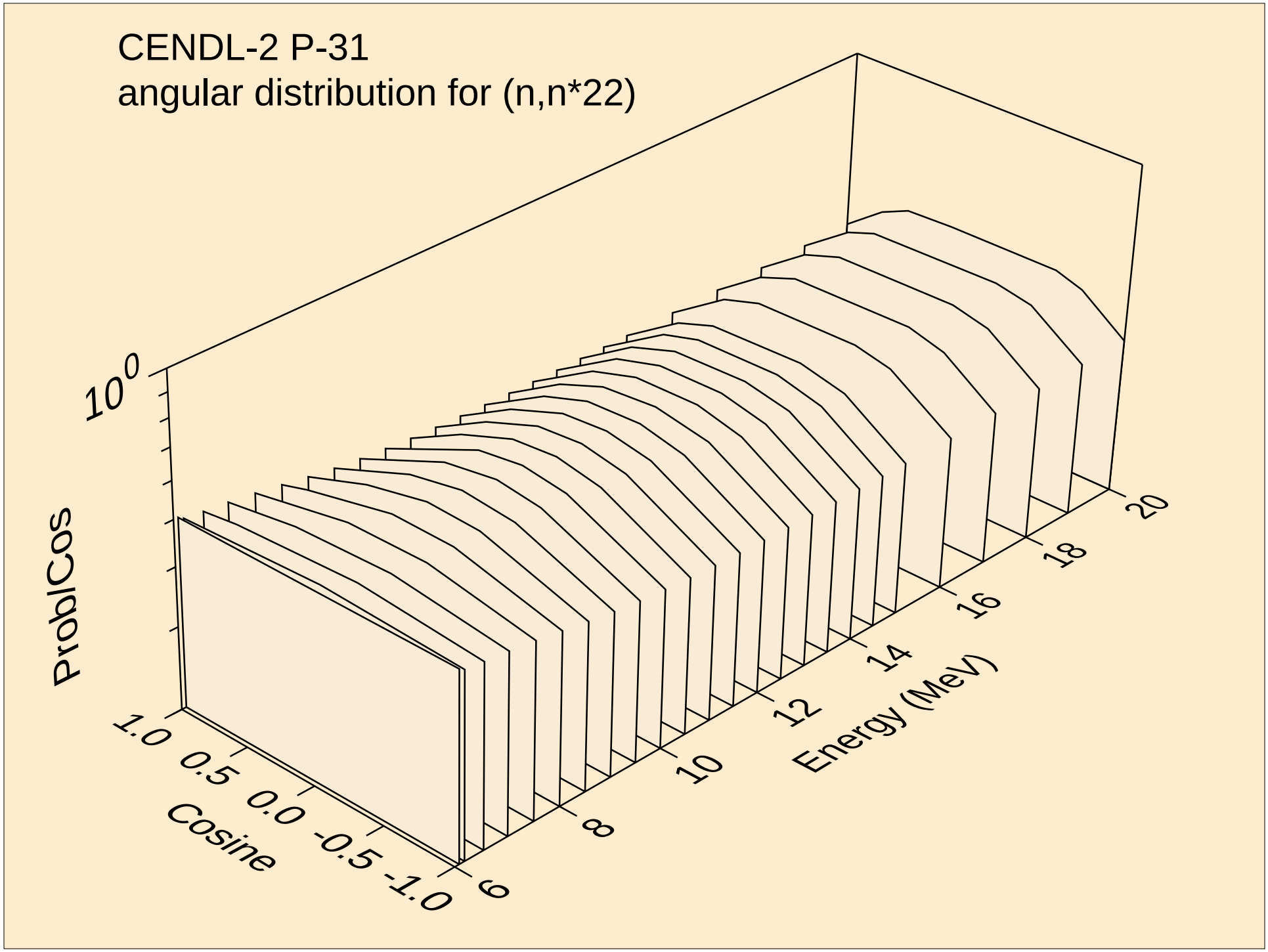
CENDL-2 P-31
angular distribution for (n,n*22)
10^0
ProbCos
1.0
0.5
0.0
-0.5
-1.0
Cosine
6
8
10
12
14
16
18
20
Energy (MeV)

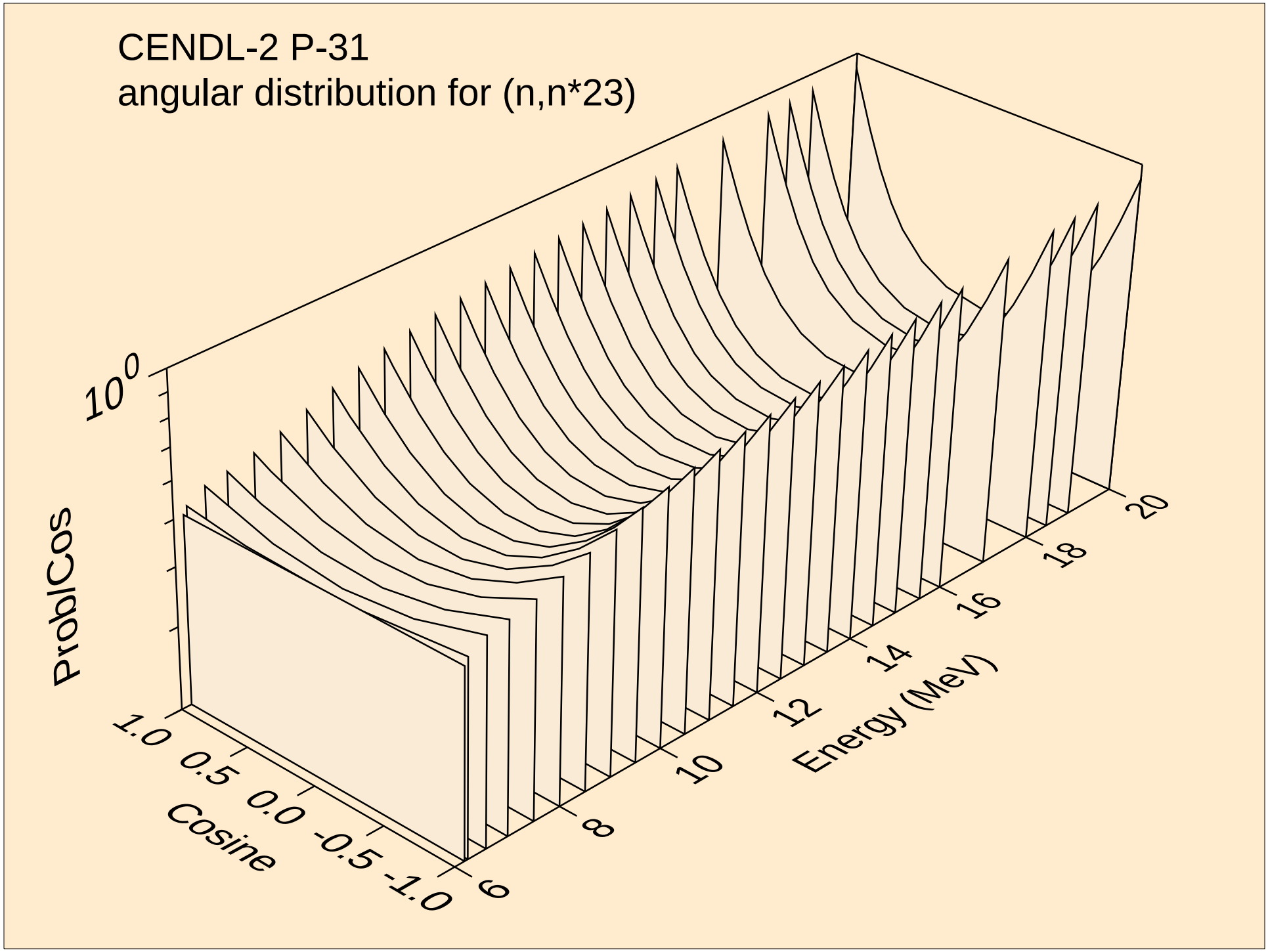
CENDL-2 P-31
angular distribution for (n,n*23)
10^0
ProbCos
1.0
0.5
0.0
-0.5
-1.0
Cosine
6
8
10
12
14
16
18
20
Energy (MeV)

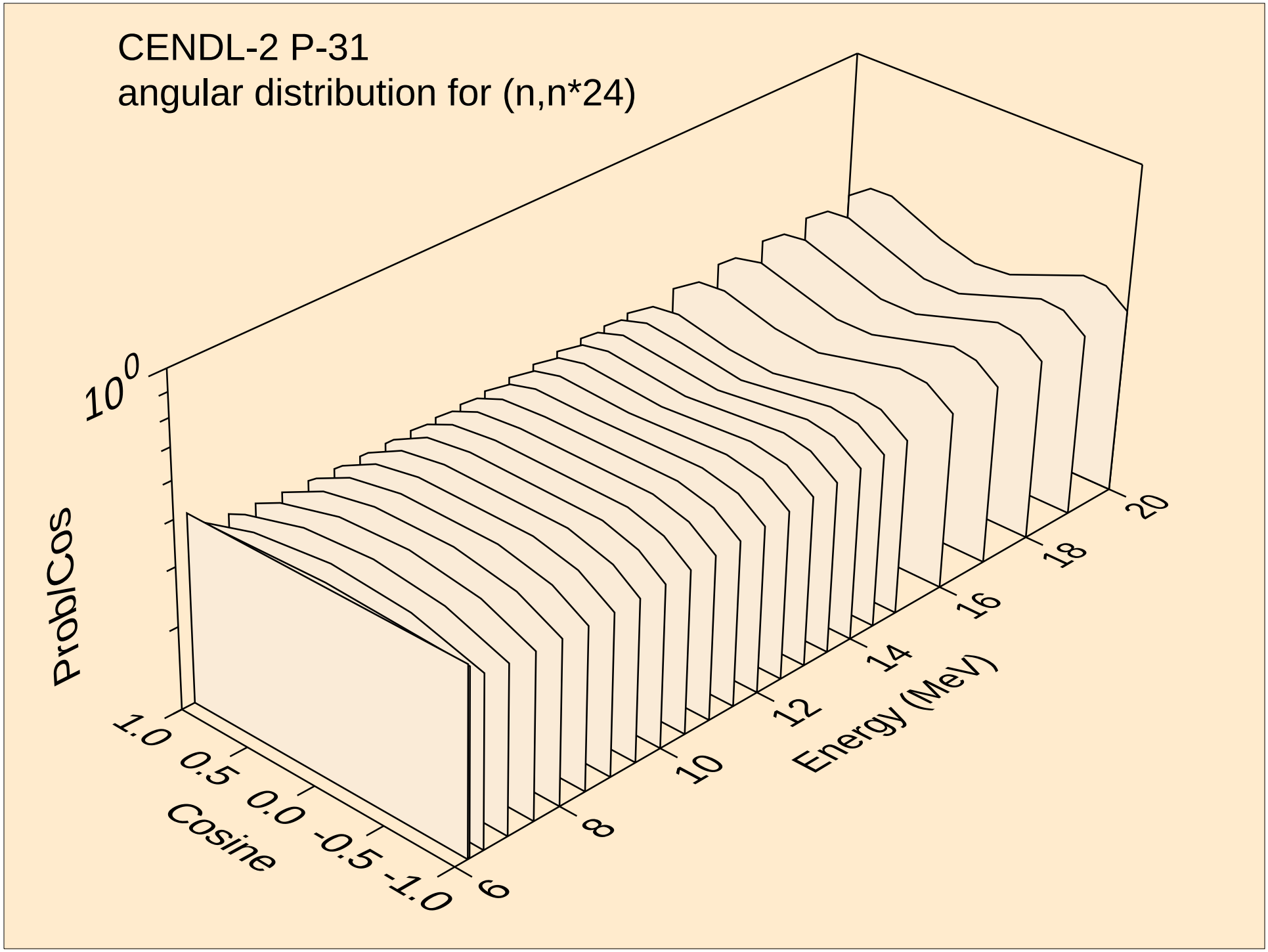
CENDL-2 P-31
angular distribution for (n,n*24)
10^0
ProbCos
1.0
0.5
0.0
-0.5
-1.0
Cosine
6
8
10
12
14
16
18
20
Energy (MeV)

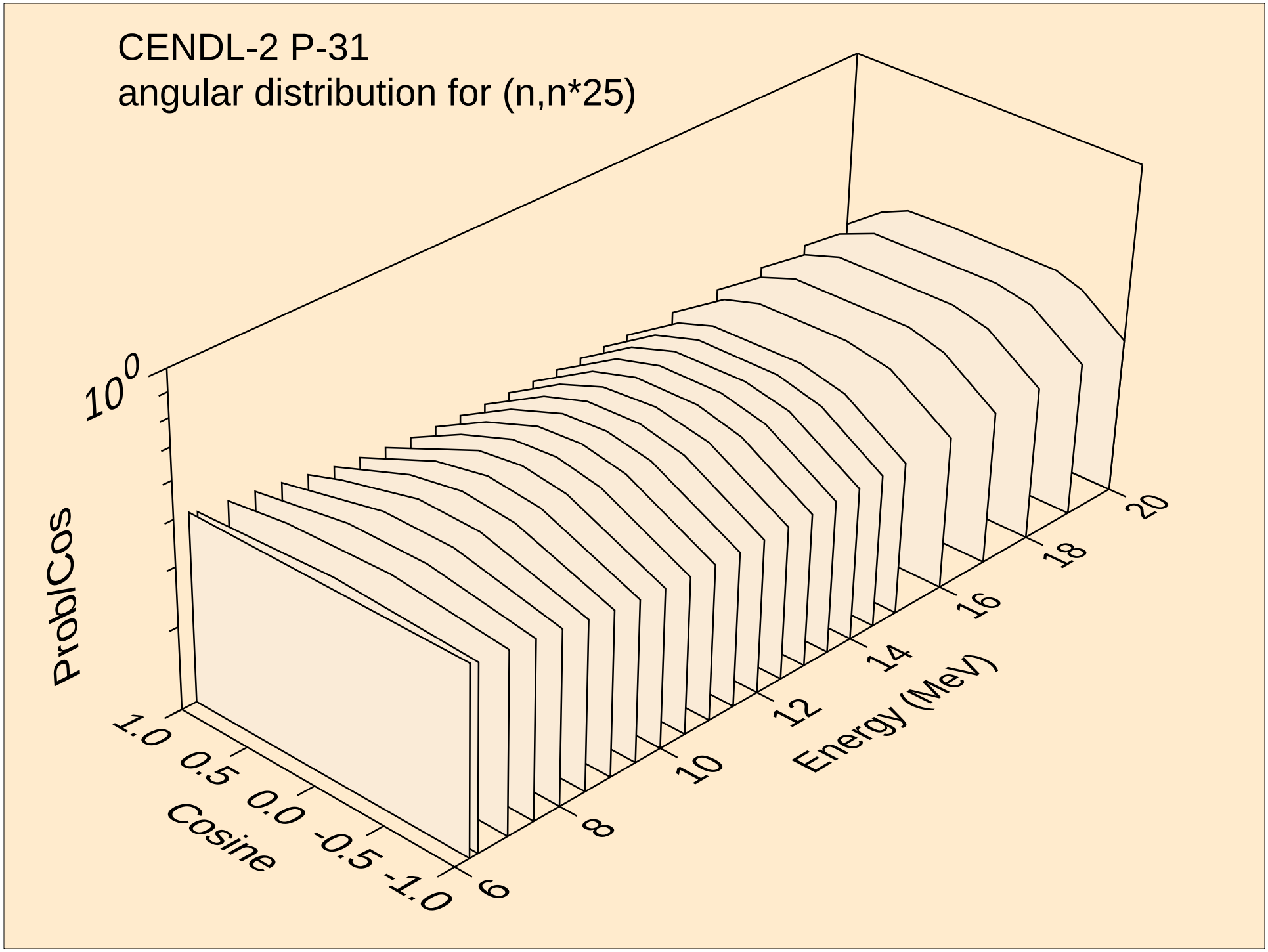
CENDL-2 P-31
angular distribution for (n,n*25)
10^0
ProbCos
1.0
0.5
0.0
-0.5
-1.0
Cosine
6
8
10
12
14
16
18
20
Energy (MeV)

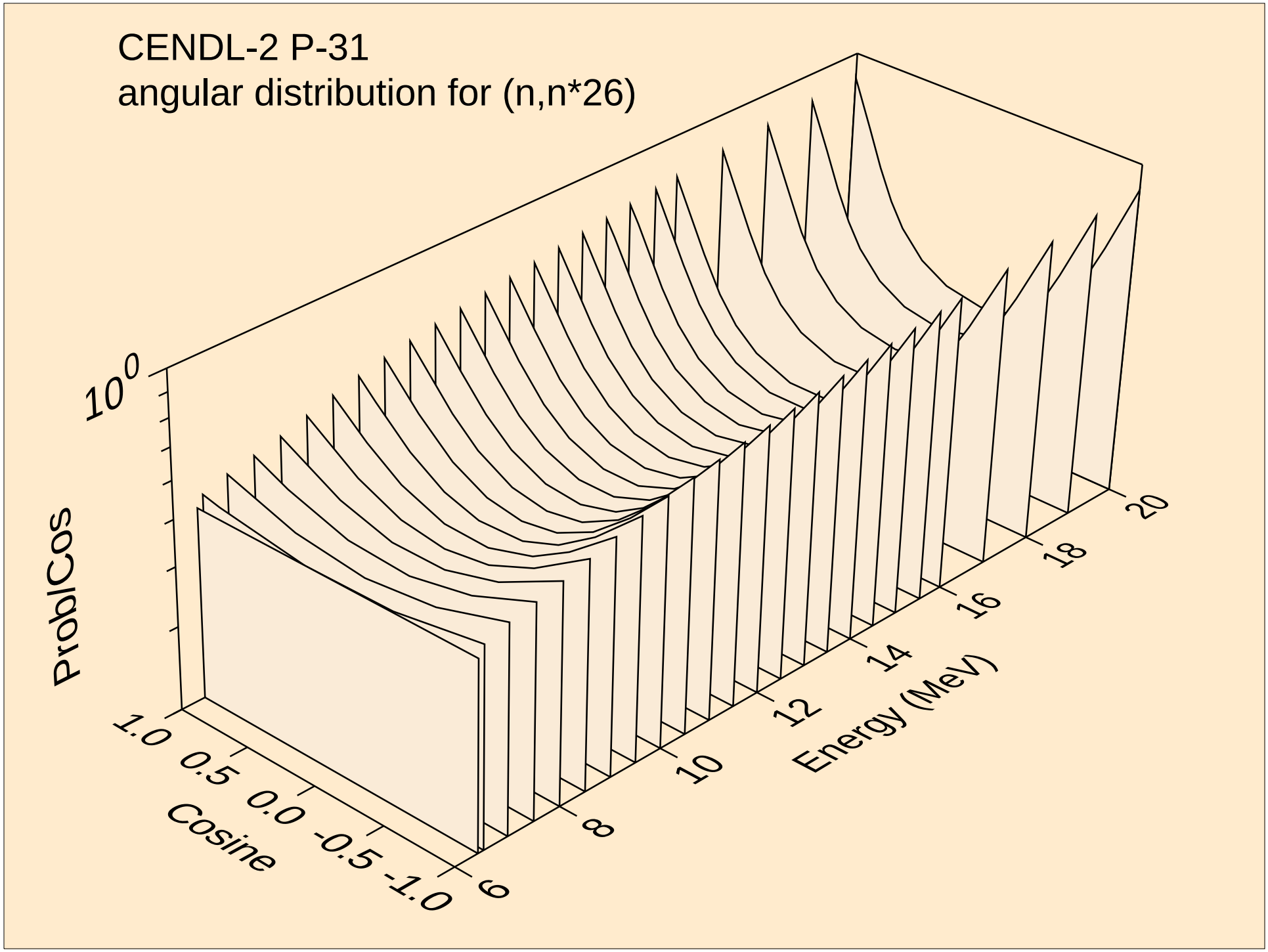
CENDL-2 P-31
angular distribution for (n,n*26)
10^0
ProbCos
1.0
0.5
0.0
-0.5
-1.0
Cosine
6
8
10
12
14
16
18
20
Energy (MeV)

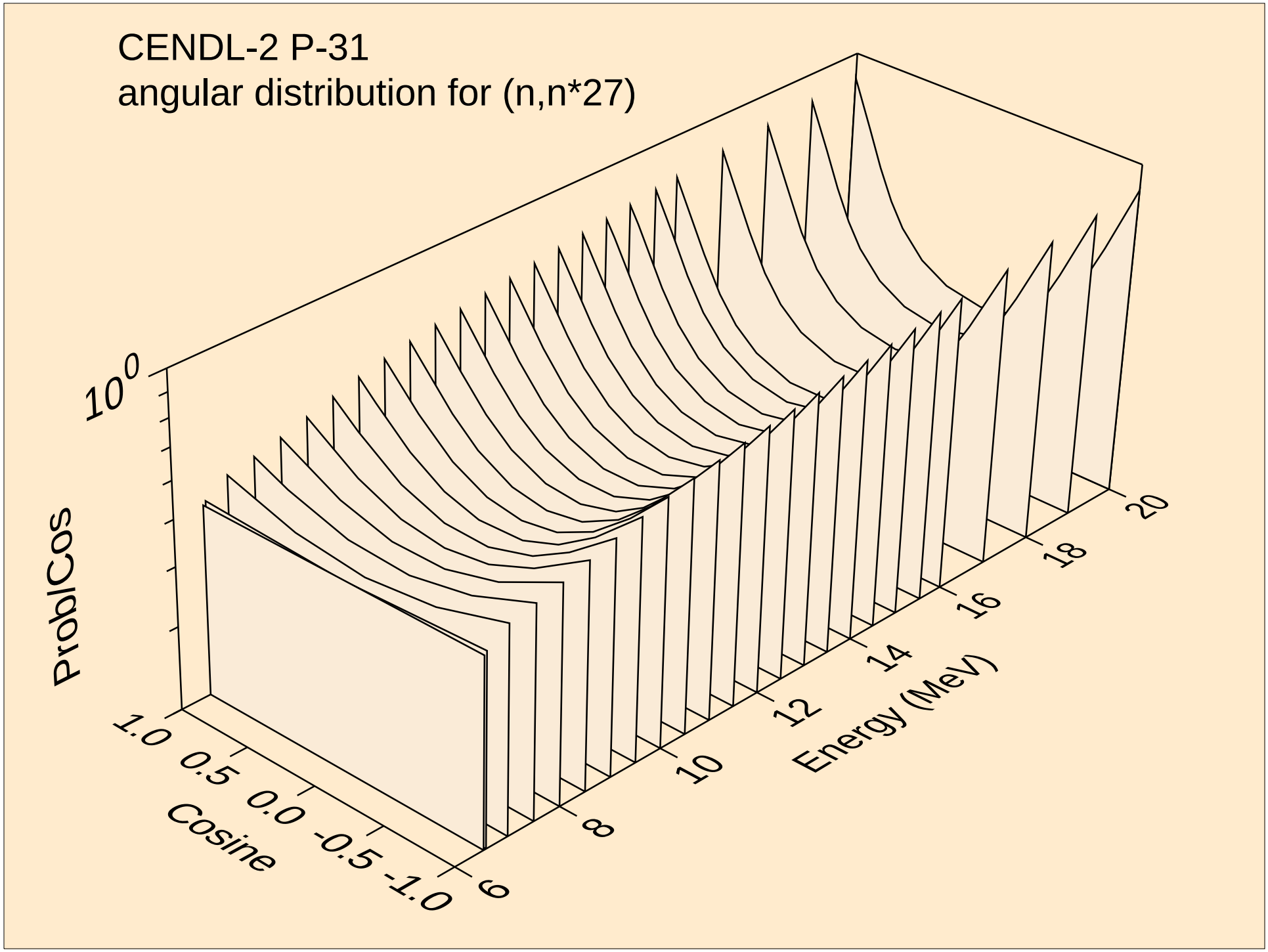
CENDL-2 P-31
angular distribution for (n,n*27)
10^0
ProbCos
1.0
0.5
0.0
-0.5
-1.0
Cosine
6
8
10
12
14
16
18
20
Energy (MeV)

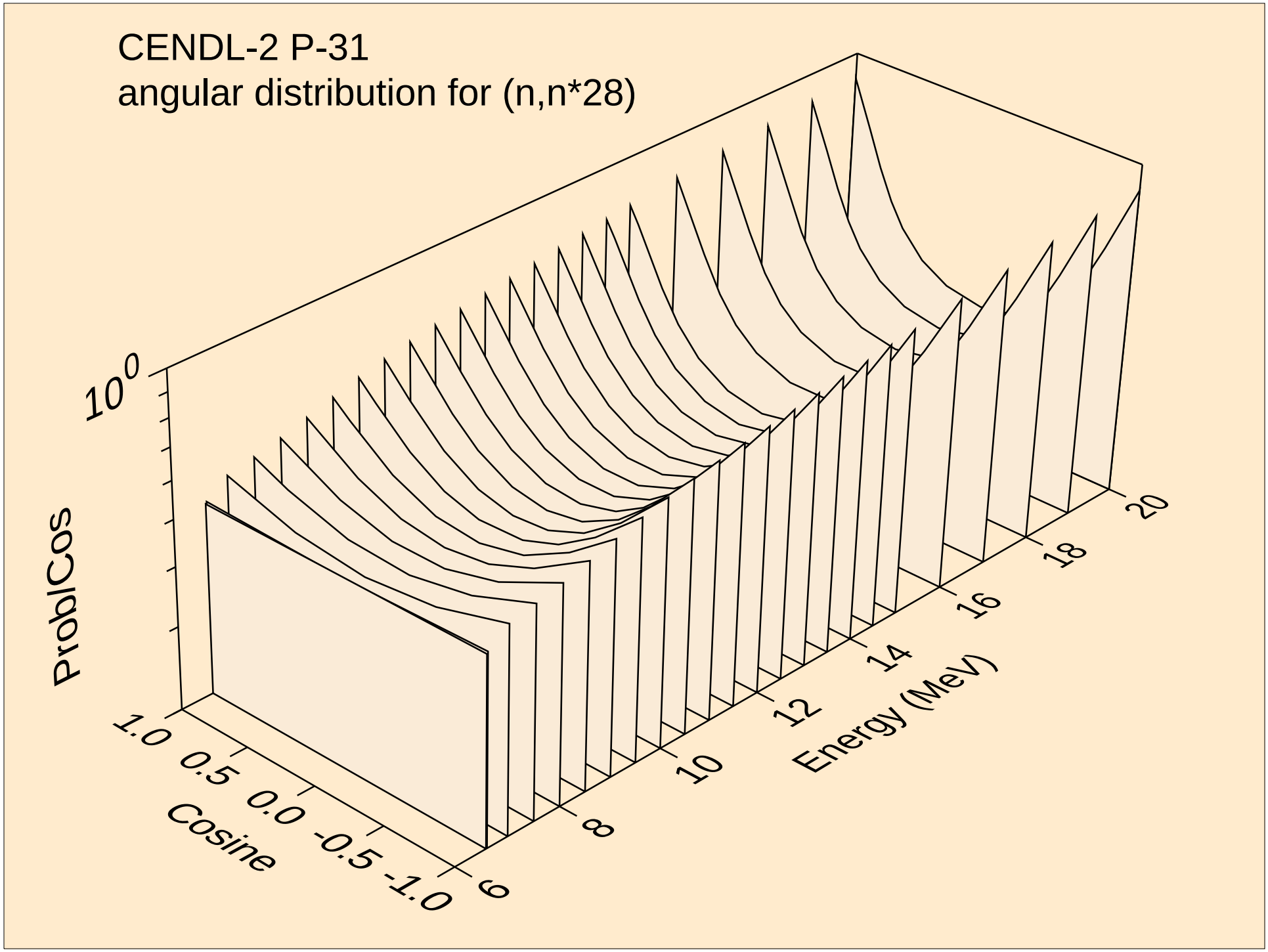
CENDL-2 P-31
angular distribution for (n,n*28)
10^0
ProbCos
1.0
0.5
0.0
-0.5
-1.0
Cosine
6
8
10
12
14
16
18
20
Energy (MeV)

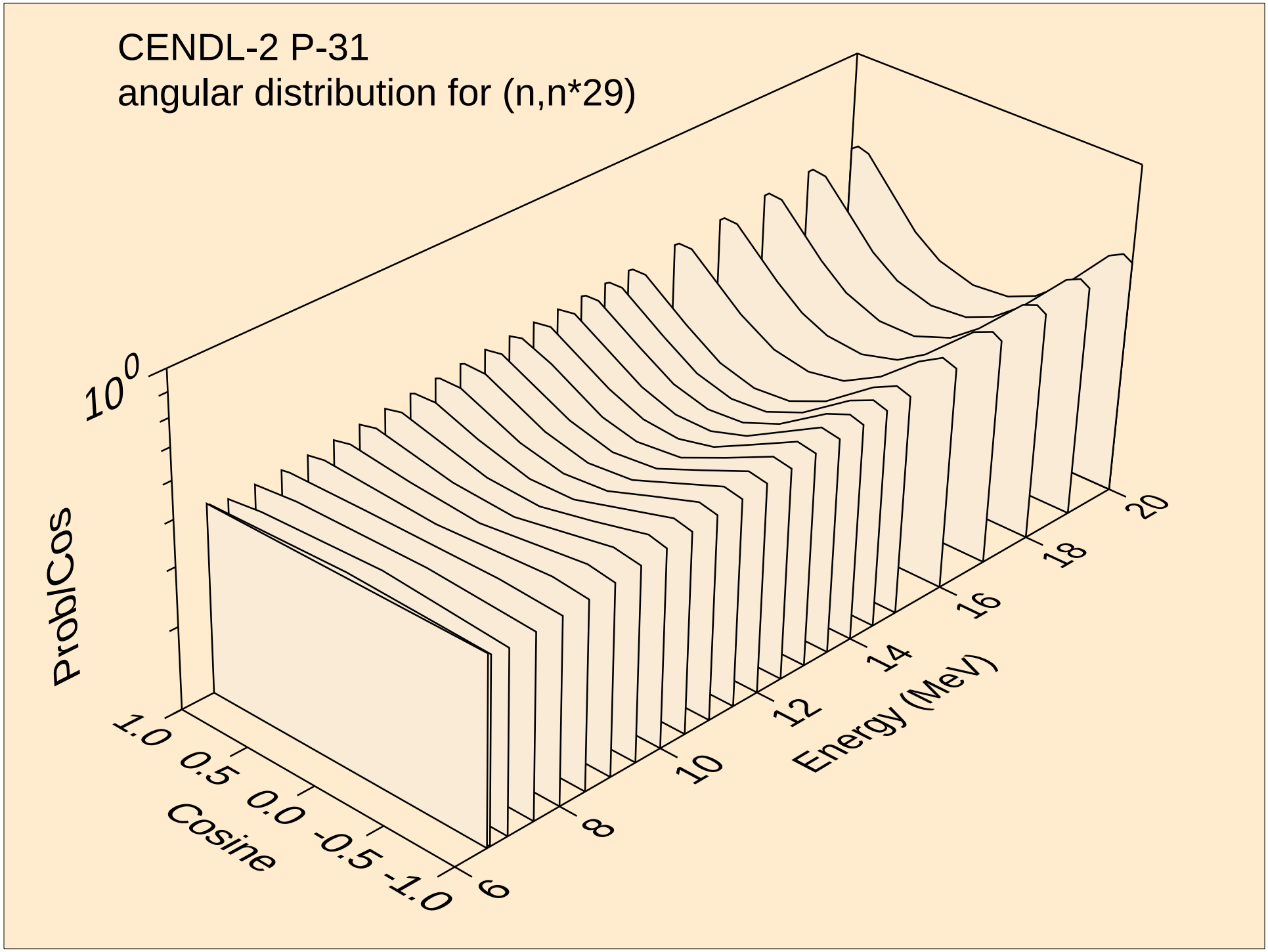
CENDL-2 P-31
angular distribution for (n,n*29)
10^0
ProbCos
1.0
0.5
0.0
-0.5
-1.0
Cosine
6
8
10
12
14
16
18
20
Energy (MeV)

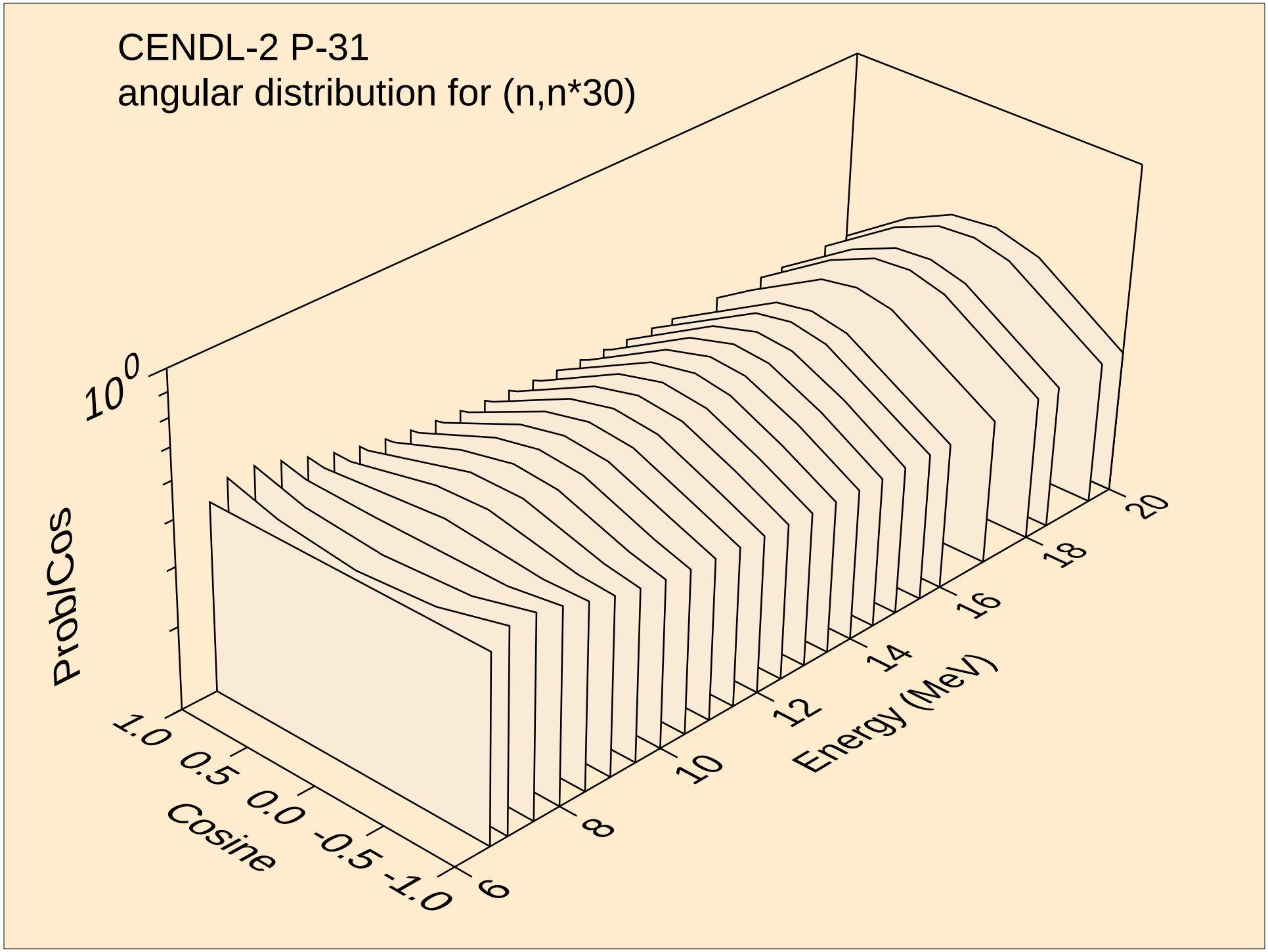
CENDL-2 P-31
angular distribution for (n,n*30)
10^0
ProbCos
1.0
0.5
0.0
-0.5
-1.0
Cosine
6
8
10
12
14
16
18
20
Energy (MeV)

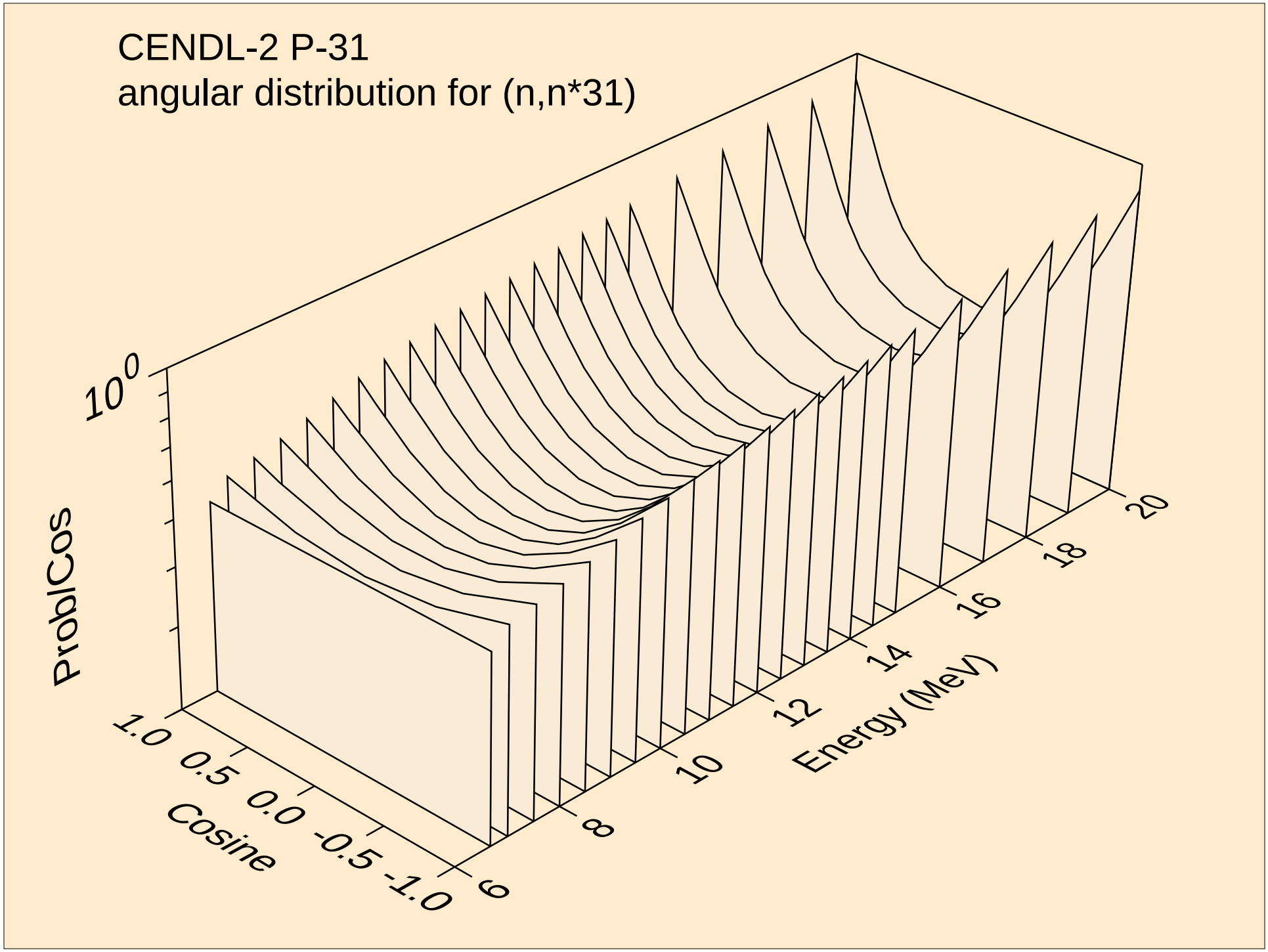
CENDL-2 P-31
angular distribution for (n,n*31)
10^0
ProblCos
1.0
0.5
0.0
-0.5
-1.0
Cosine
6
8
10
12
14
16
18
20
Energy (MeV)

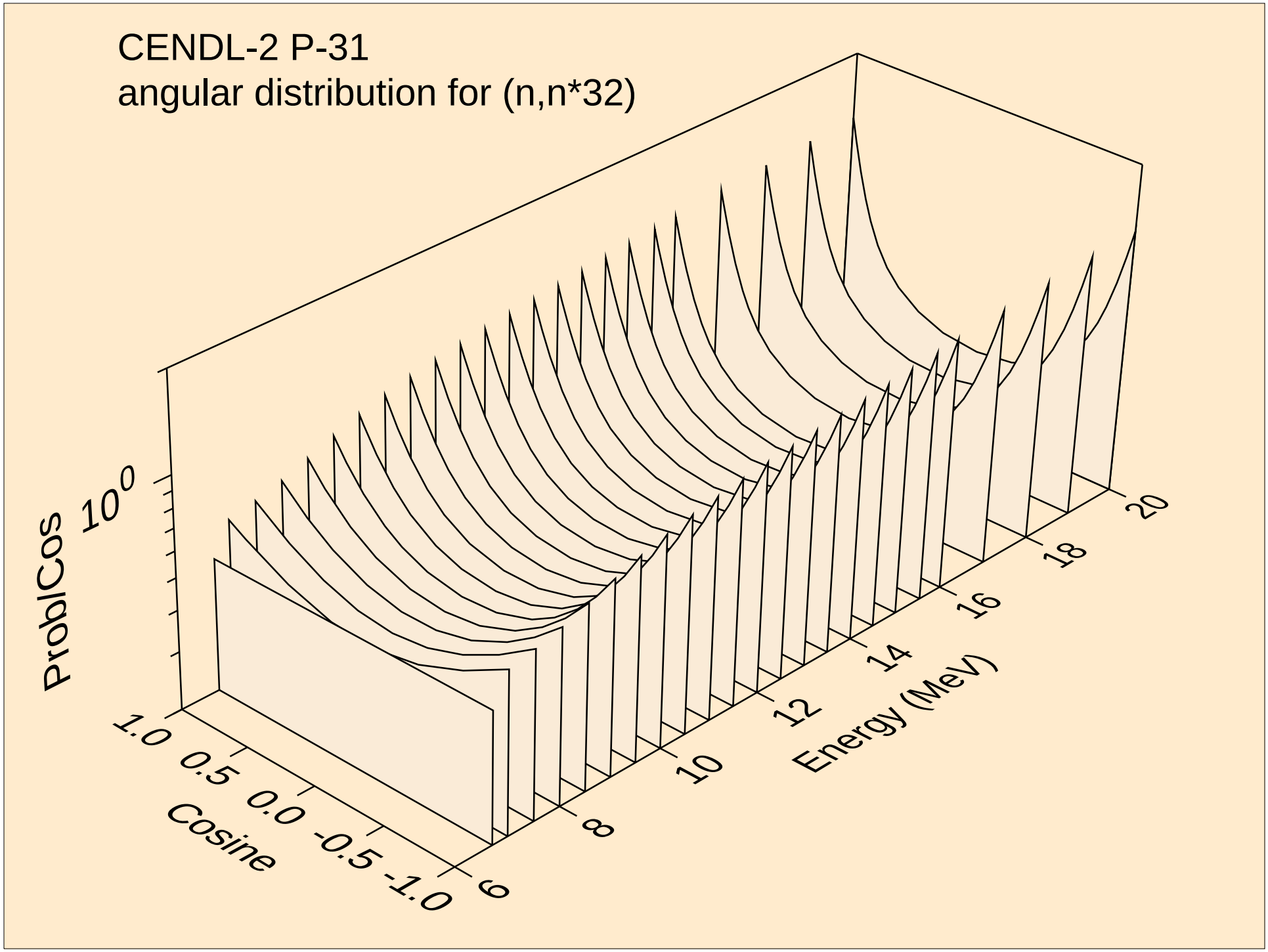
CENDL-2 P-31
angular distribution for (n,n*32)
ProblCos
10^0
1.0
0.5
0.0
-0.5
-1.0
Cosine
6
8
10
12
14
16
18
20
Energy (MeV)

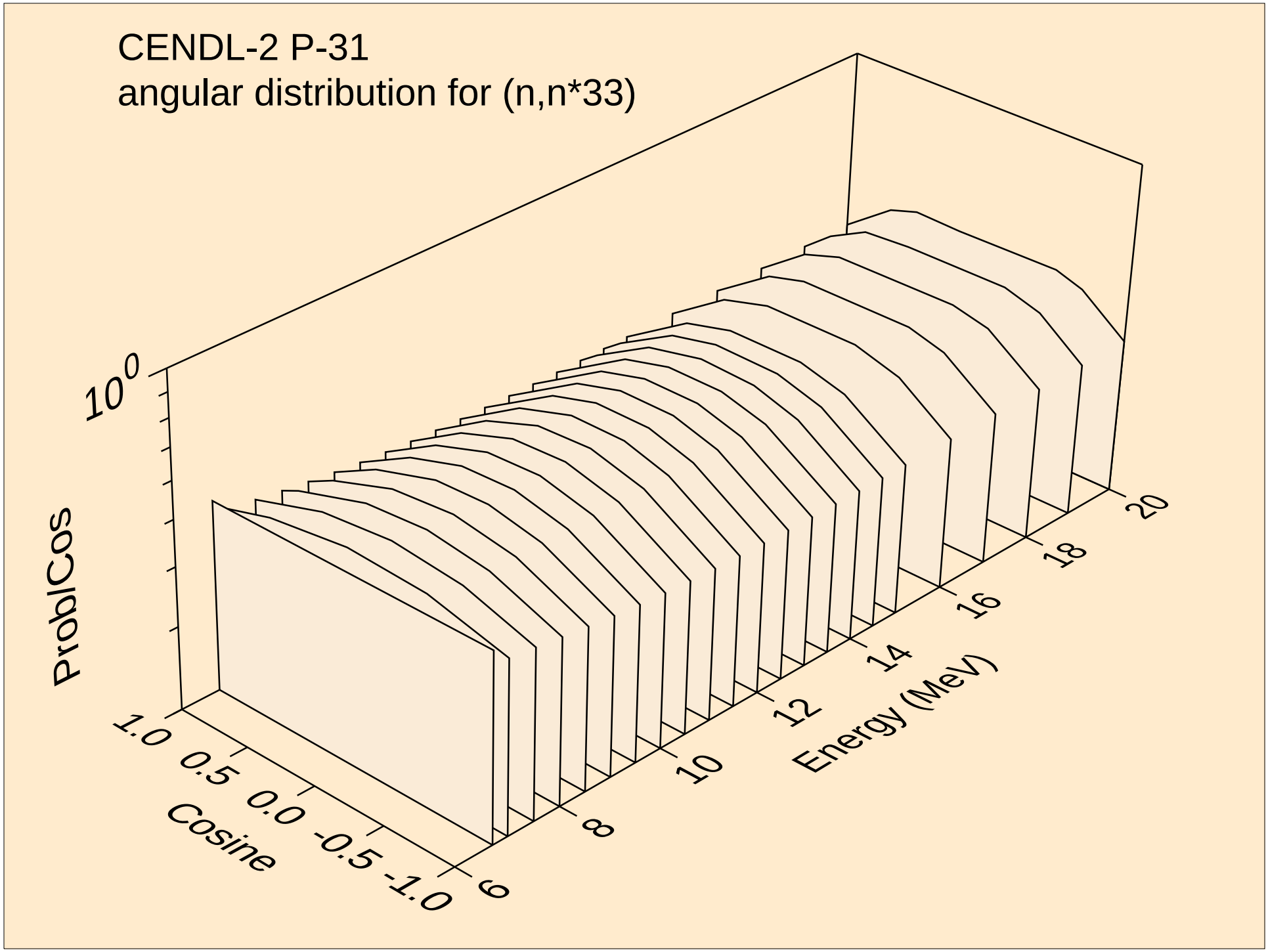
CENDL-2 P-31
angular distribution for (n,n*33)
10^0
ProbCos
1.0
0.5
0.0
-0.5
-1.0
Cosine
6
8
10
12
14
16
18
20
Energy (MeV)

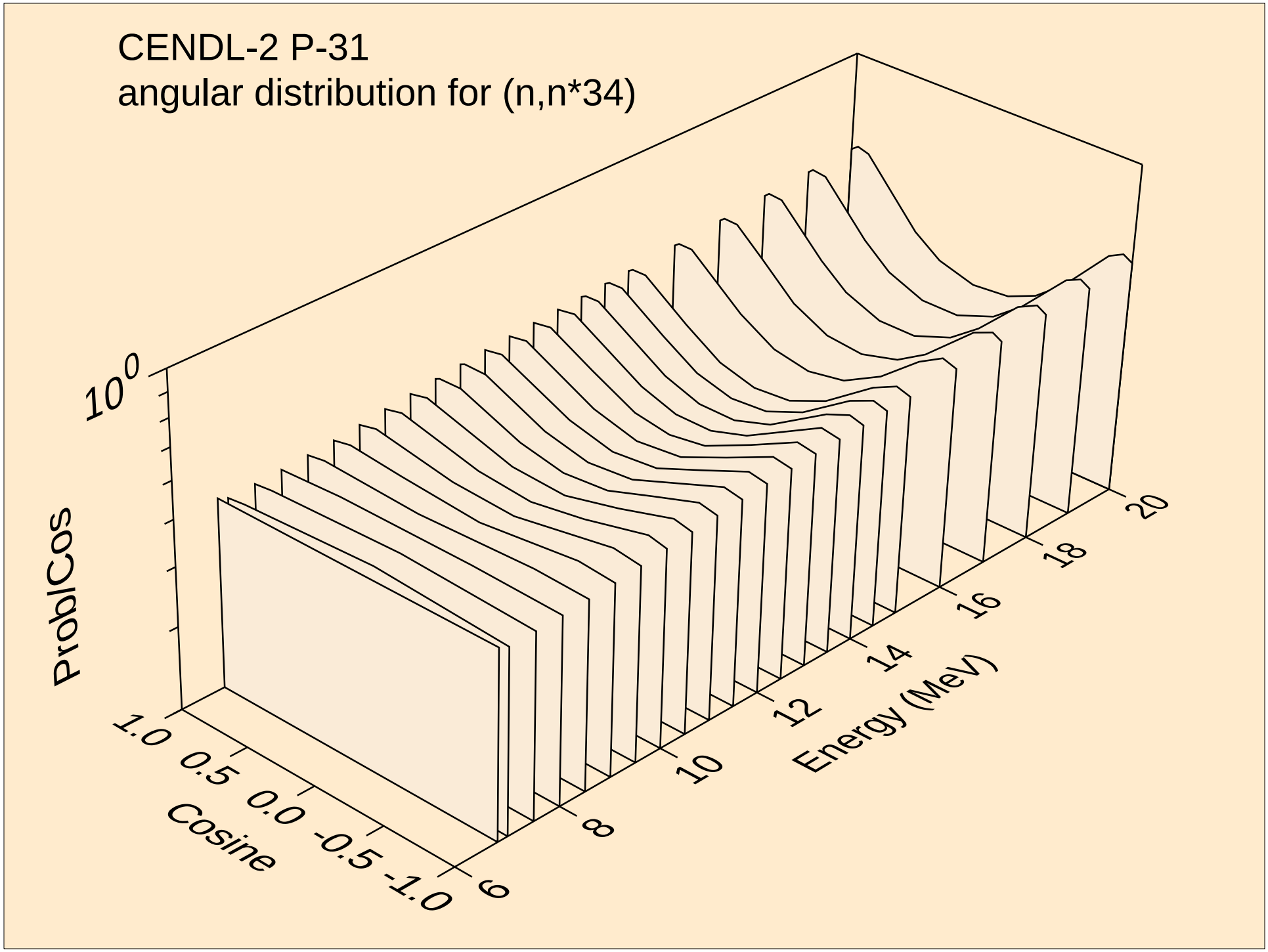
CENDL-2 P-31
angular distribution for (n,n*34)
10^0
ProbCos
1.0
0.5
0.0
-0.5
-1.0
Cosine
6
8
10
12
14
16
18
20
Energy (MeV)

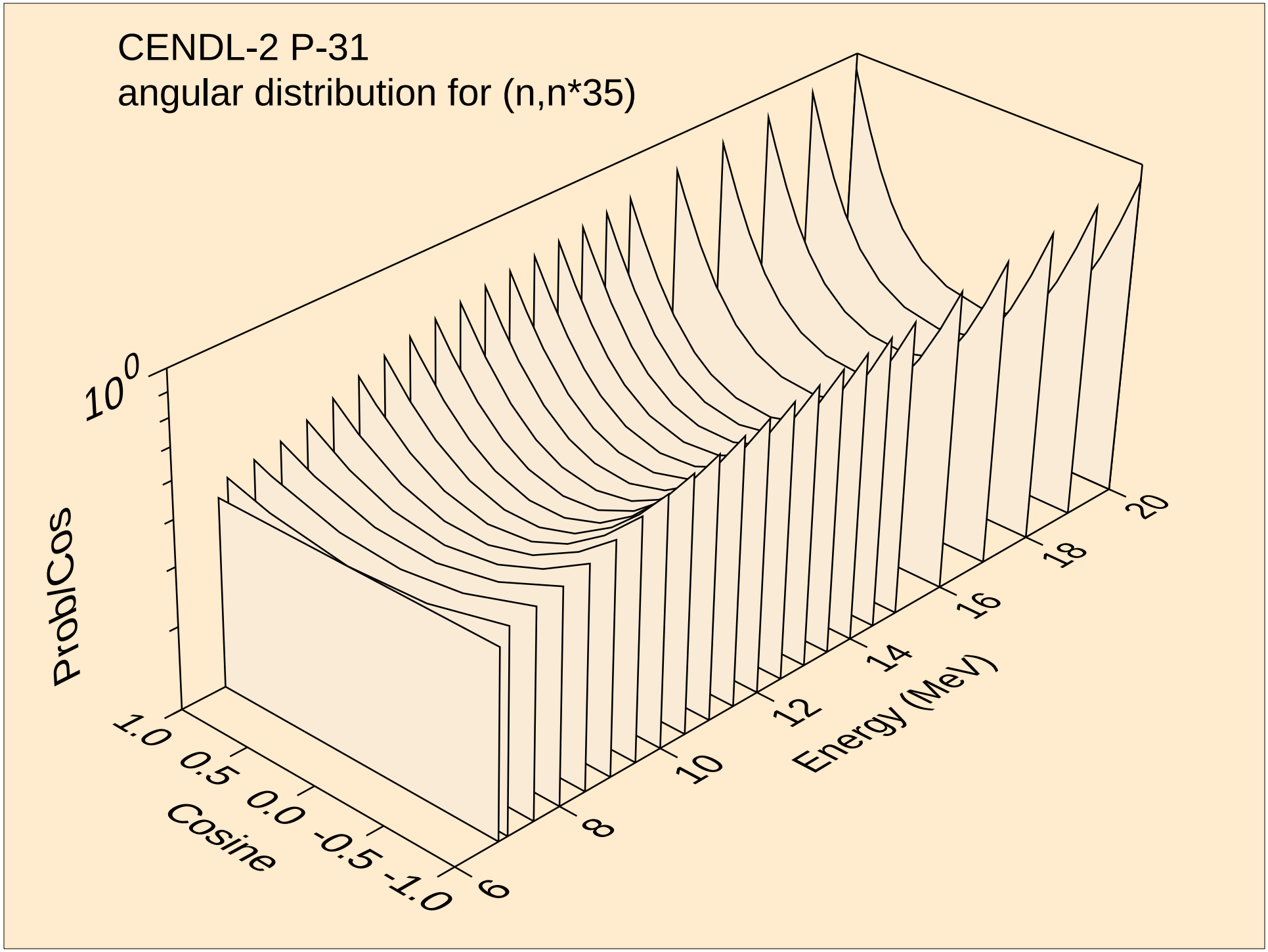
CENDL-2 P-31
angular distribution for (n,n*35)
ProbCos
10^0
Cosine
1.0
0.5
0.0
-0.5
-1.0
Energy (MeV)
6
8
10
12
14
16
18
20

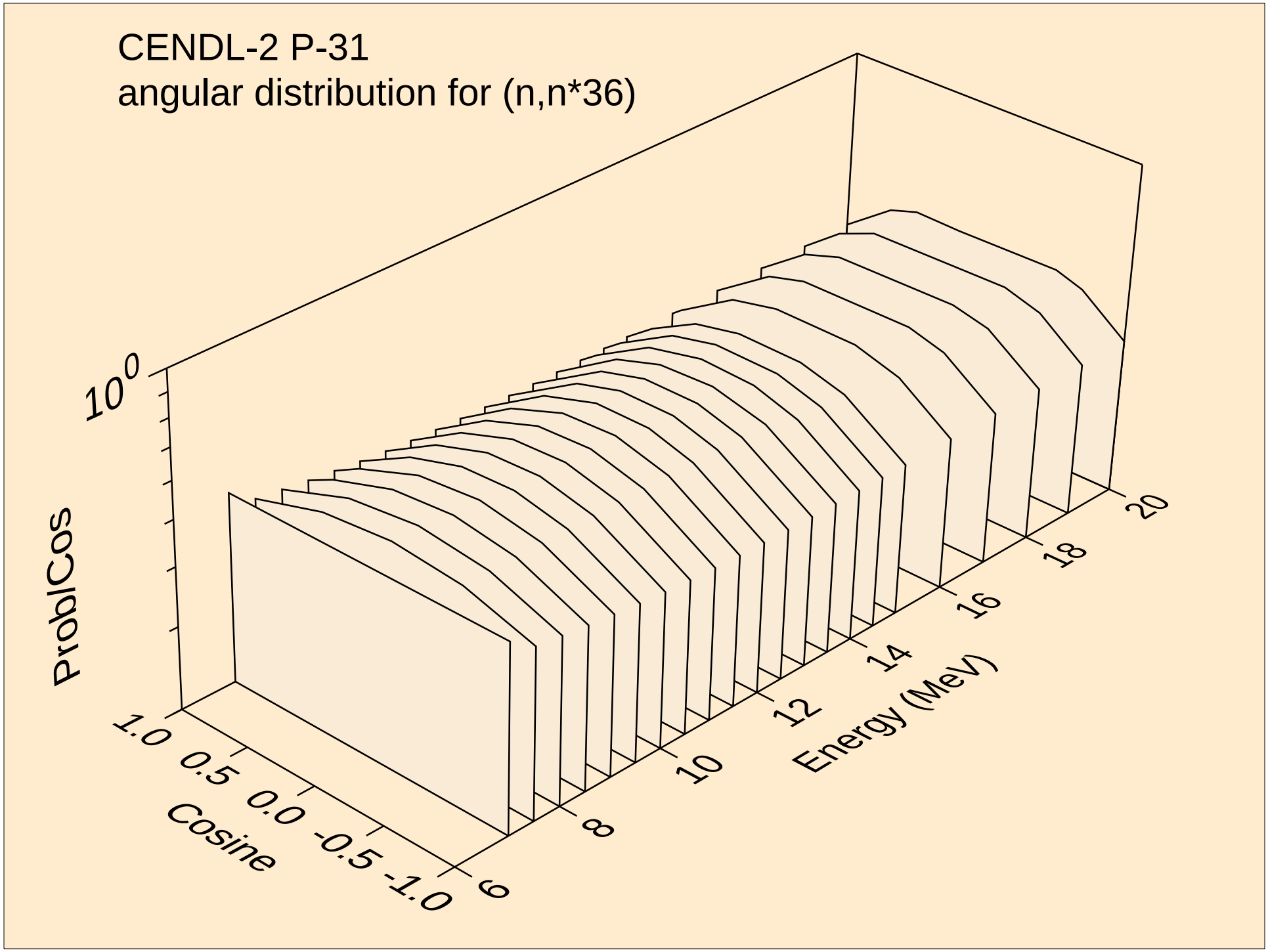
CENDL-2 P-31
angular distribution for (n,n*36)
10^0
ProbCos
1.0
0.5
0.0
-0.5
-1.0
Cosine
6
8
10
12
14
16
18
20
Energy (MeV)

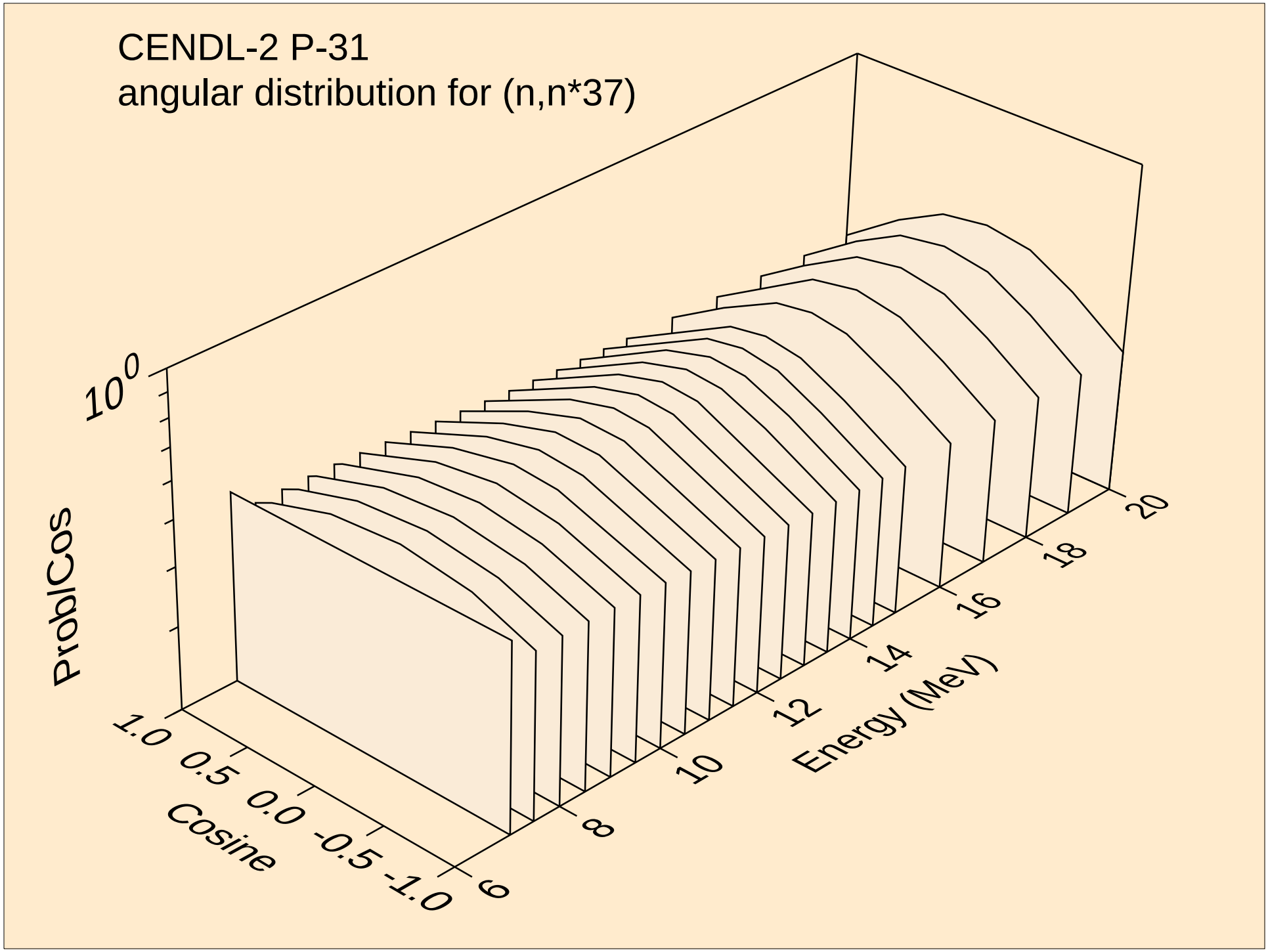
CENDL-2 P-31
angular distribution for (n,n*37)
10^0
ProbCos
1.0
0.5
0.0
-0.5
-1.0
Cosine
6
8
10
12
14
16
18
20
Energy (MeV)

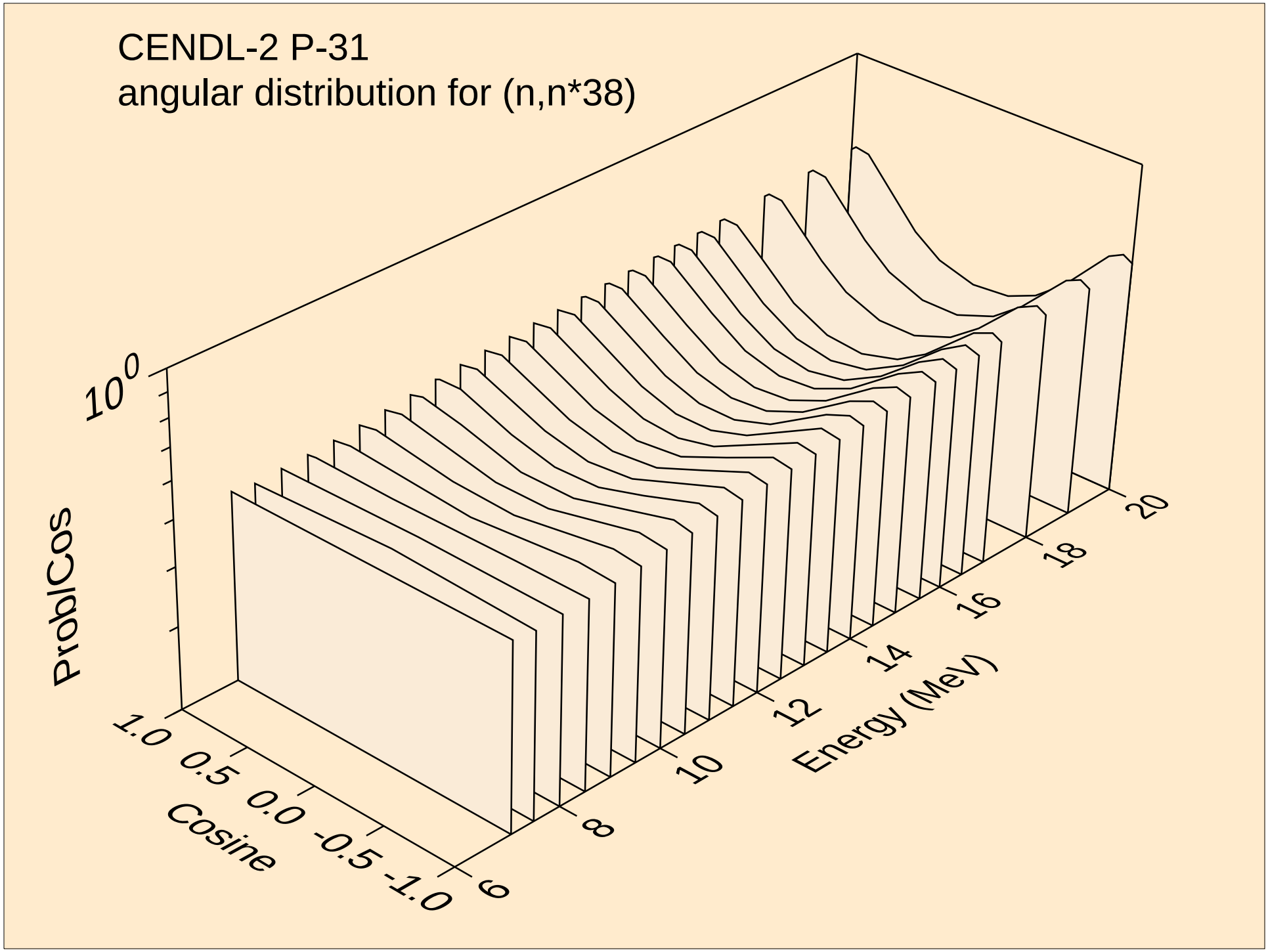
CENDL-2 P-31
angular distribution for (n,n*38)
10^0
ProbCos
1.0
0.5
0.0
-0.5
-1.0
Cosine
6
8
10
12
14
16
18
20
Energy (MeV)

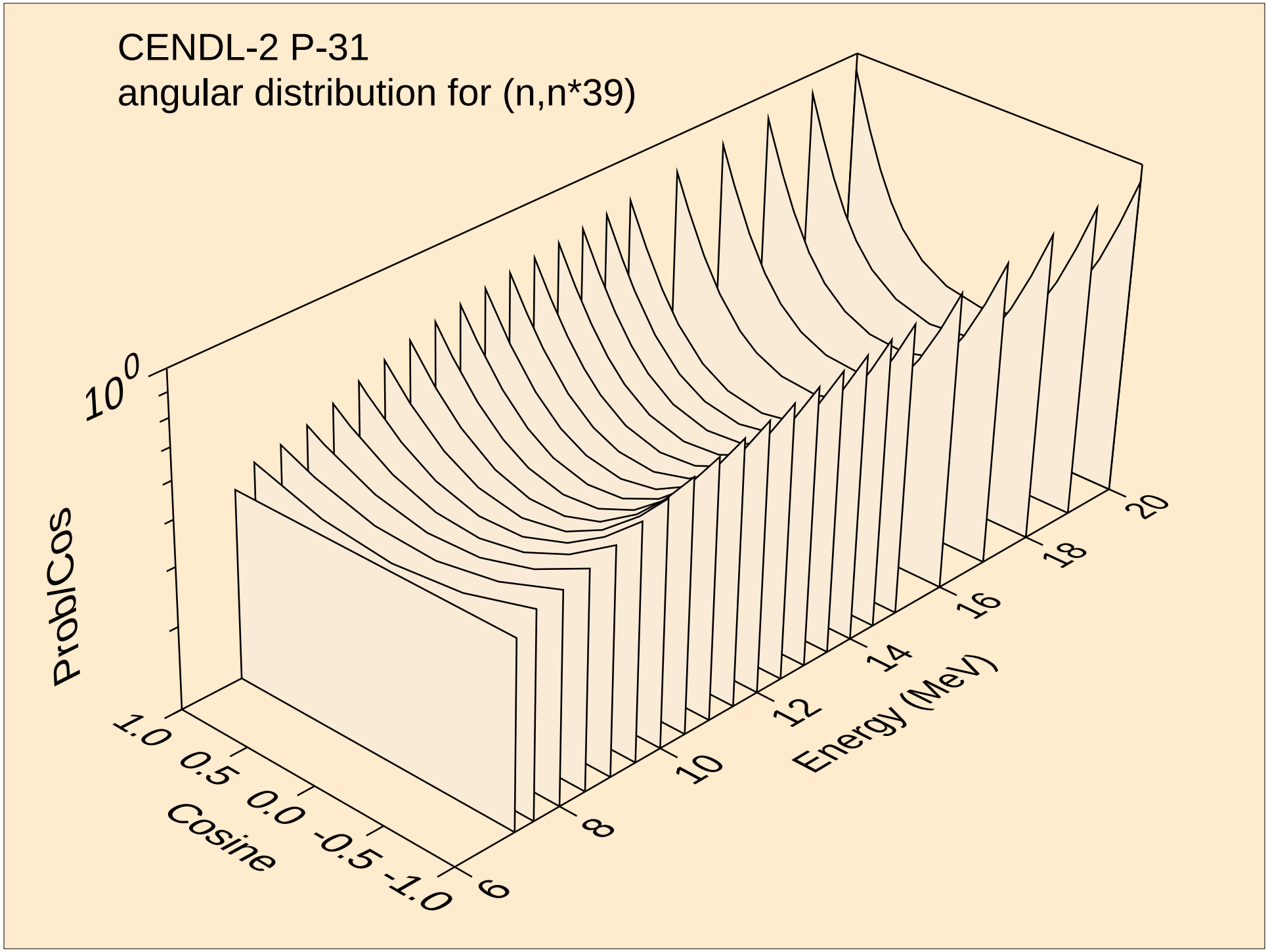
CENDL-2 P-31
angular distribution for (n,n*39)
10^0
ProbCos
1.0
0.5
0.0
-0.5
-1.0
Cosine
6
8
10
12
14
16
18
20
Energy (MeV)

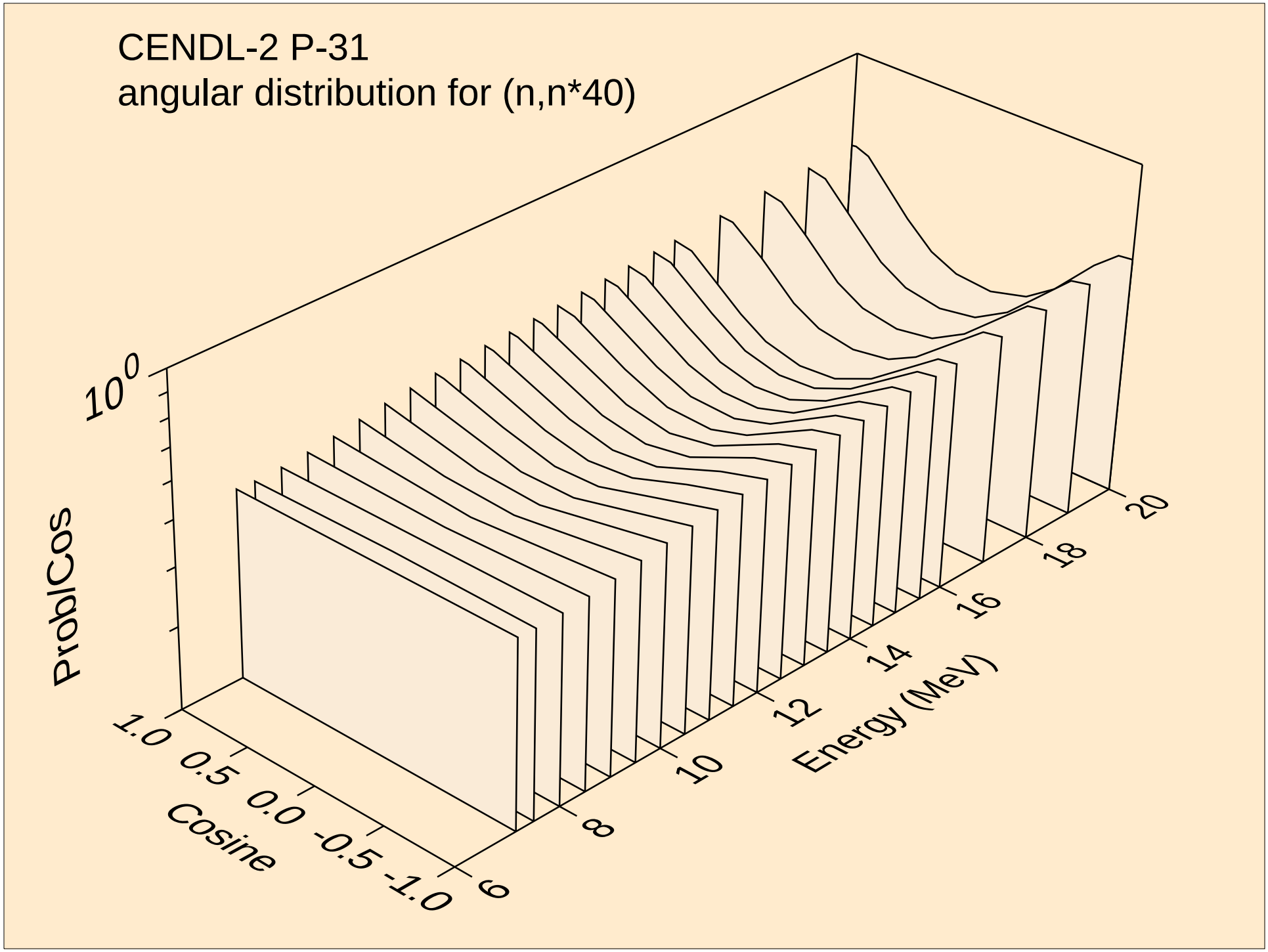
CENDL-2 P-31
angular distribution for (n,n*40)
10^0
ProbCos
1.0
0.5
0.0
-0.5
-1.0
Cosine
6
8
10
12
14
16
18
20
Energy (MeV)

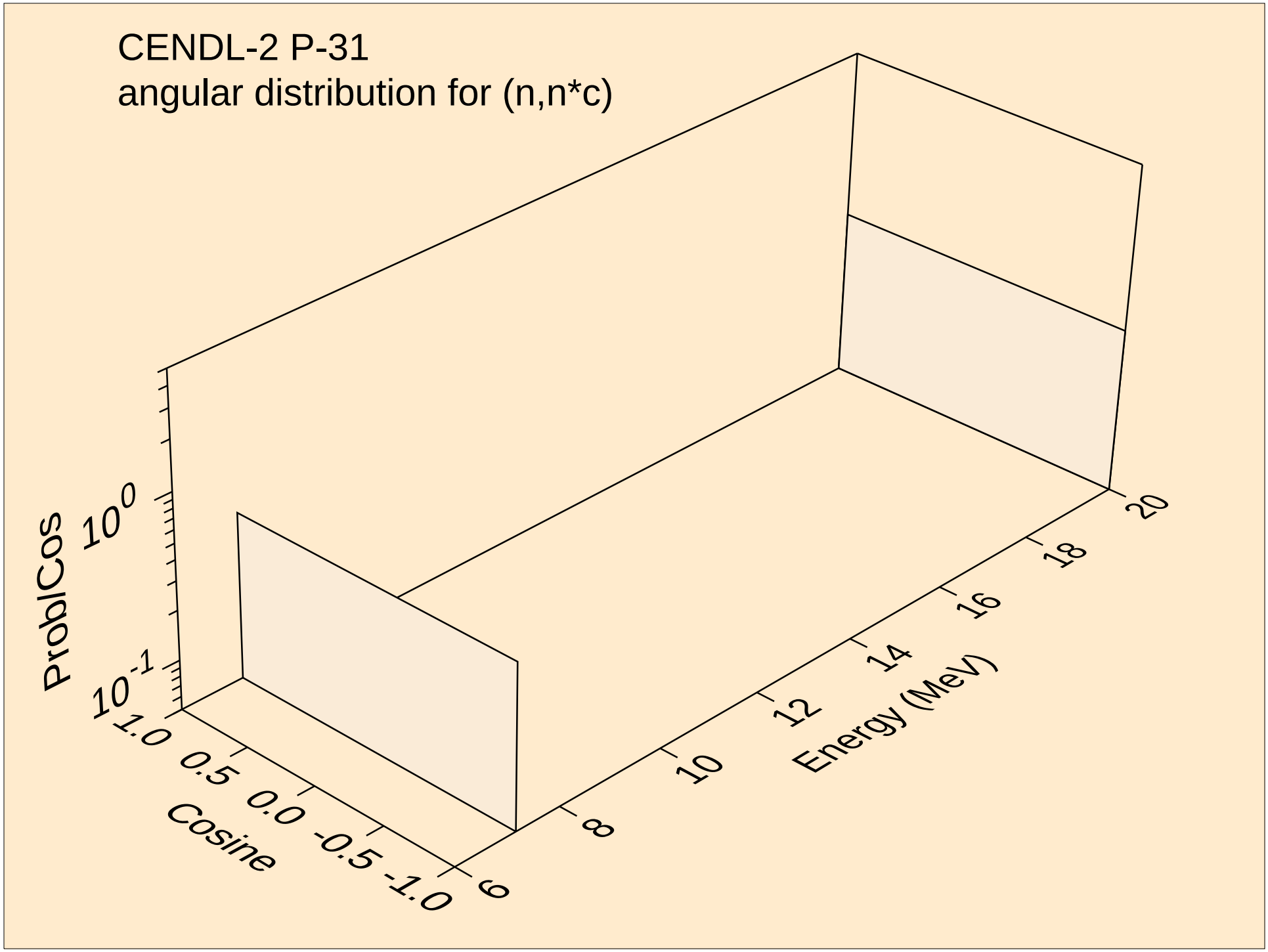
CENDL-2 P-31
angular distribution for (n,n*c)
ProbCos
10^{0}
10^{-1}
1.0
0.5
0.0
-0.5
-1.0
Cosine
6
8
10
12
14
16
18
20
Energy (MeV)

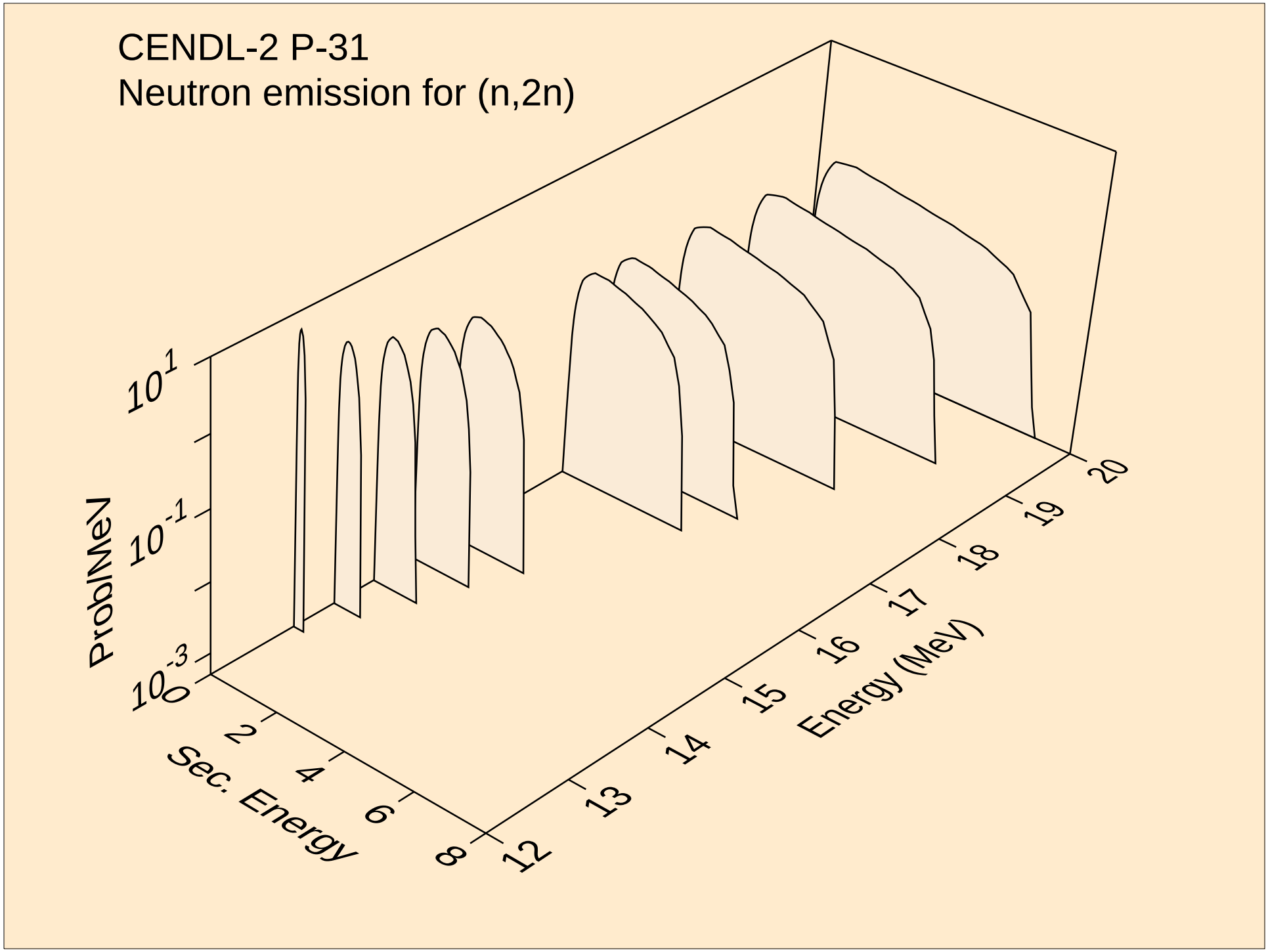
CENDL-2 P-31
Neutron emission for (n,2n)
Prob/MeV
10^{1}
10^{-1}
10^{-3}
Sec. Energy
0
2
4
6
8
Energy (MeV)
12
13
14
15
16
17
18
19
20

CENDL-2 P-31
Neutron emission for (n,n*)a

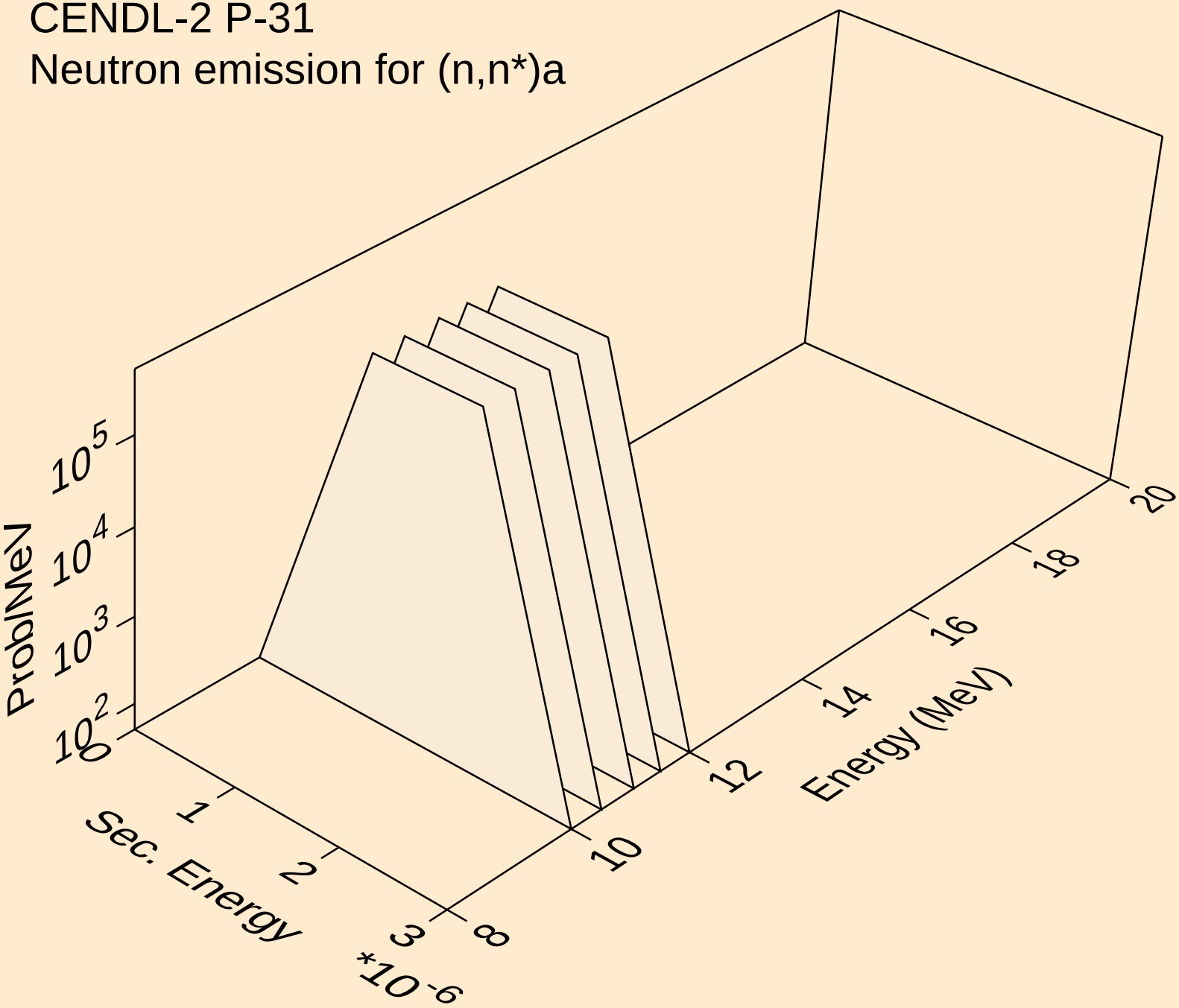

CENDL-2 P-31
Neutron emission for (n,n*)p

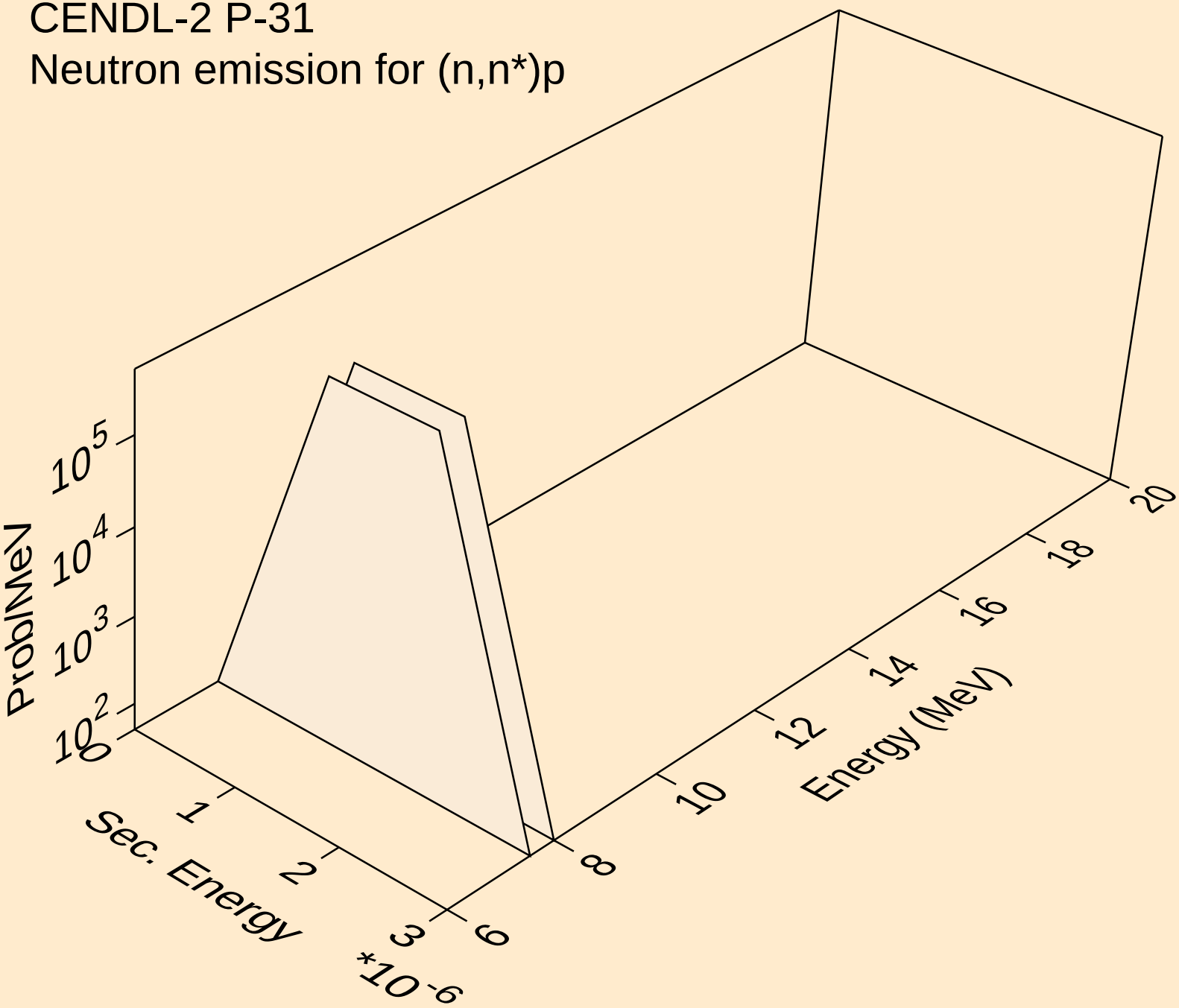

CENDL-2 P-31
Neutron emission for (n,n*)d

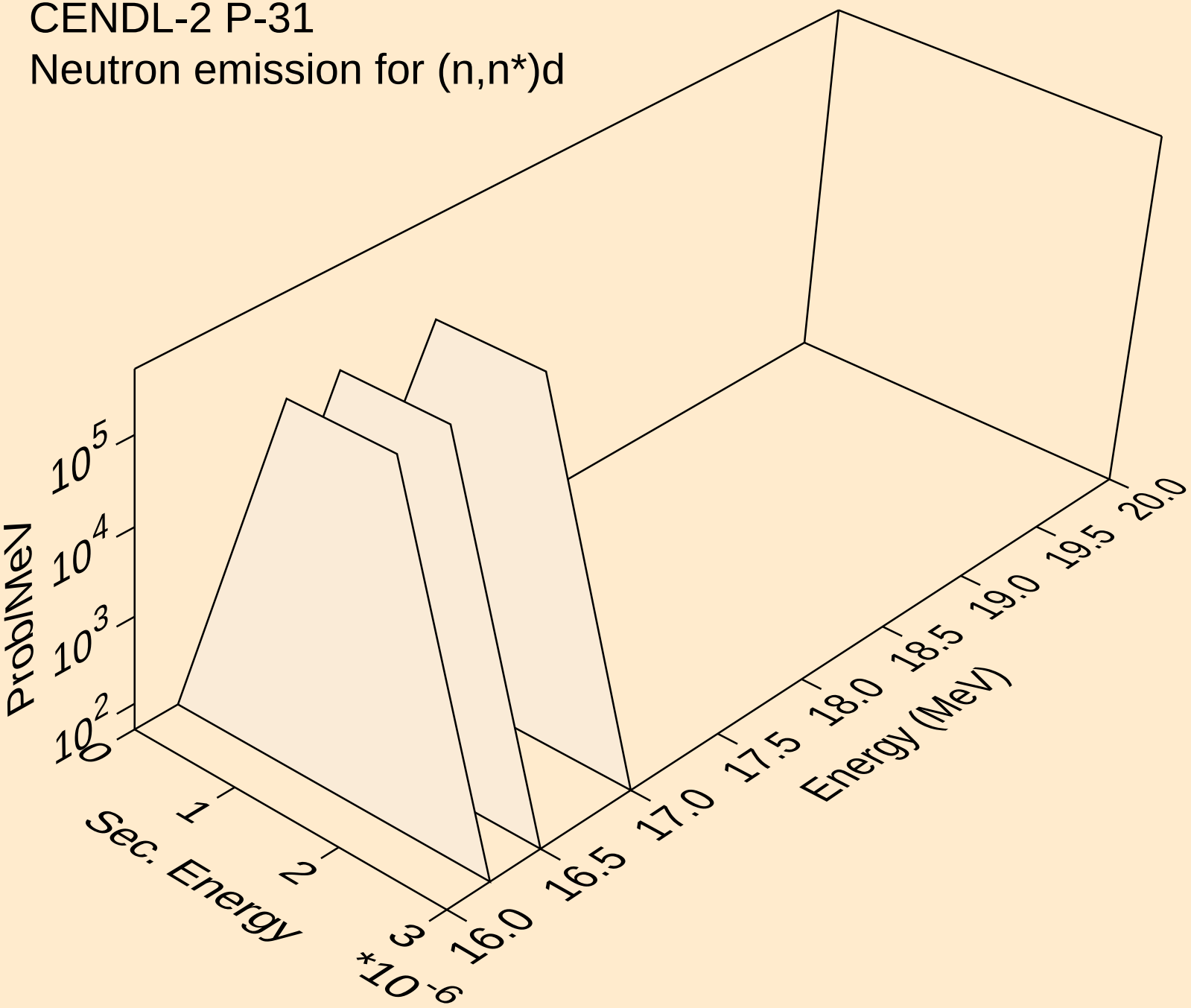

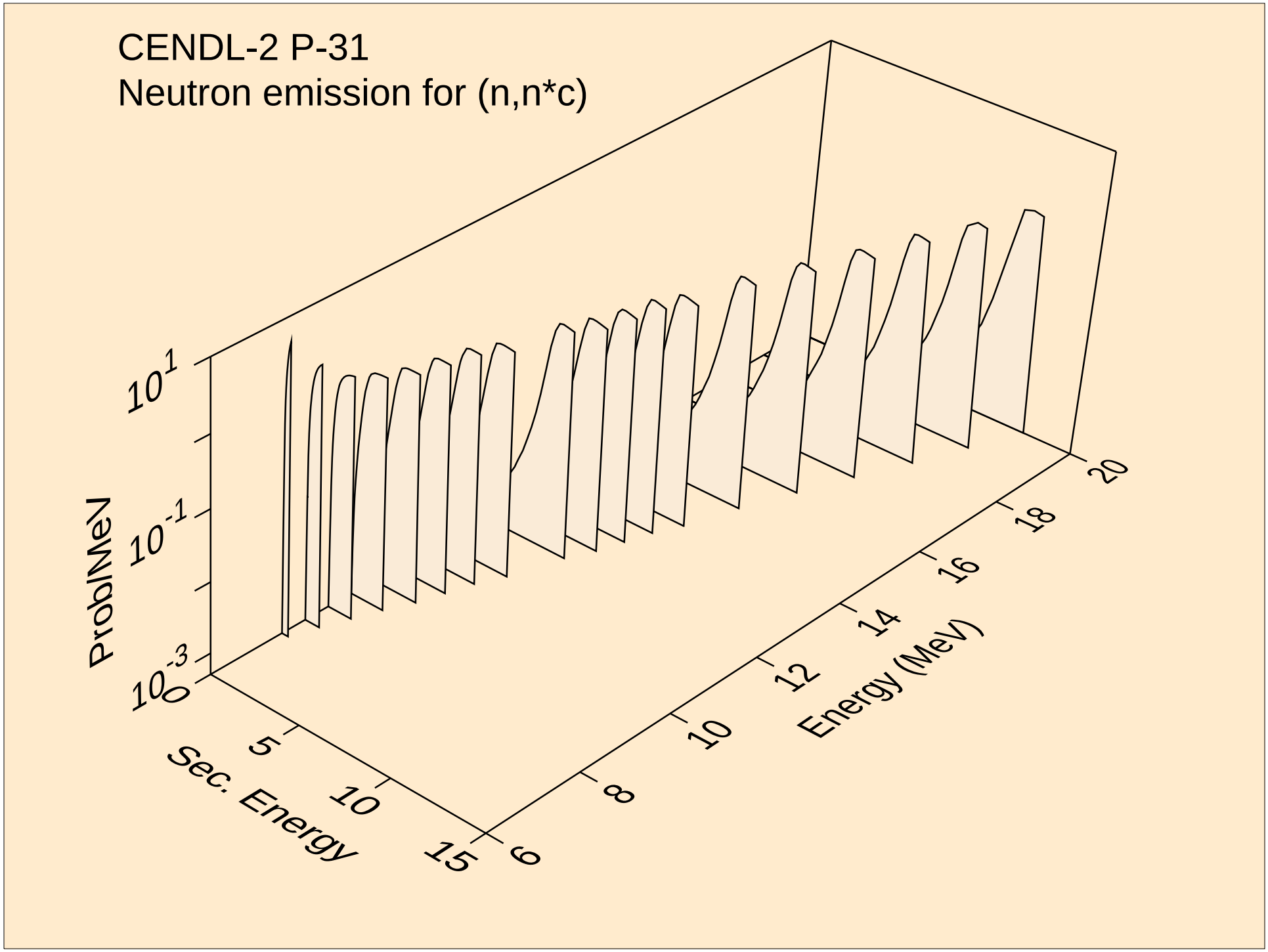
CENDL-2 P-31
Neutron emission for (n,n*c)
Prob/MeV
10^{1}
10^{-1}
10^{-3}
0
5
10
15
Sec. Energy
6
8
10
12
14
16
18
20
Energy (MeV)