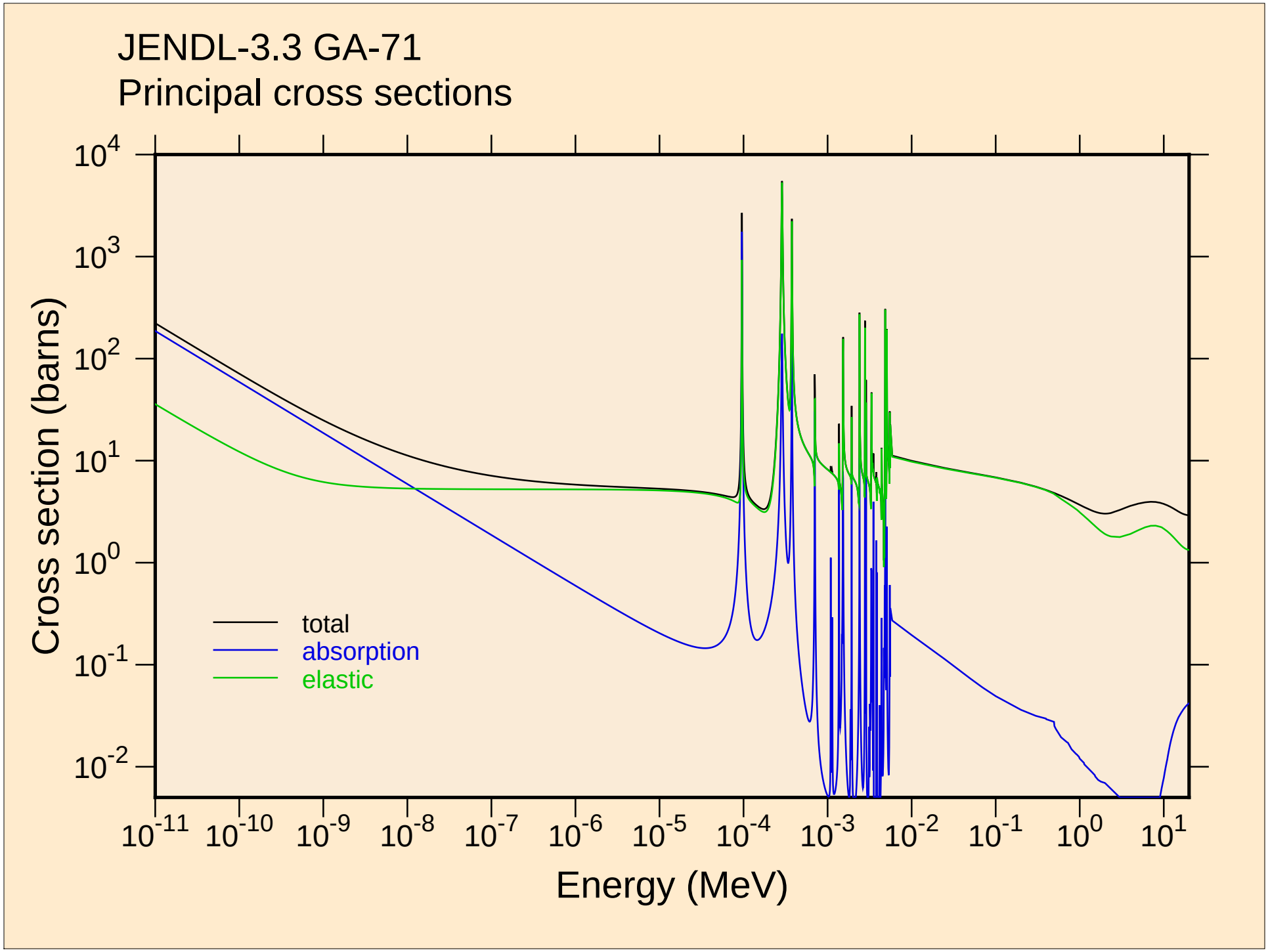
JENDL-3.3 GA-71
Principal cross sections
Cross section (barns)
Energy (MeV)
total
absorption
elastic
10^{4}
10^{3}
10^{2}
10^{1}
10^{0}
10^{-1}
10^{-2}
10^{-11}
10^{-10}
10^{-9}
10^{-8}
10^{-7}
10^{-6}
10^{-5}
10^{-4}
10^{-3}
10^{-2}
10^{-1}
10^{0}
10^{1}

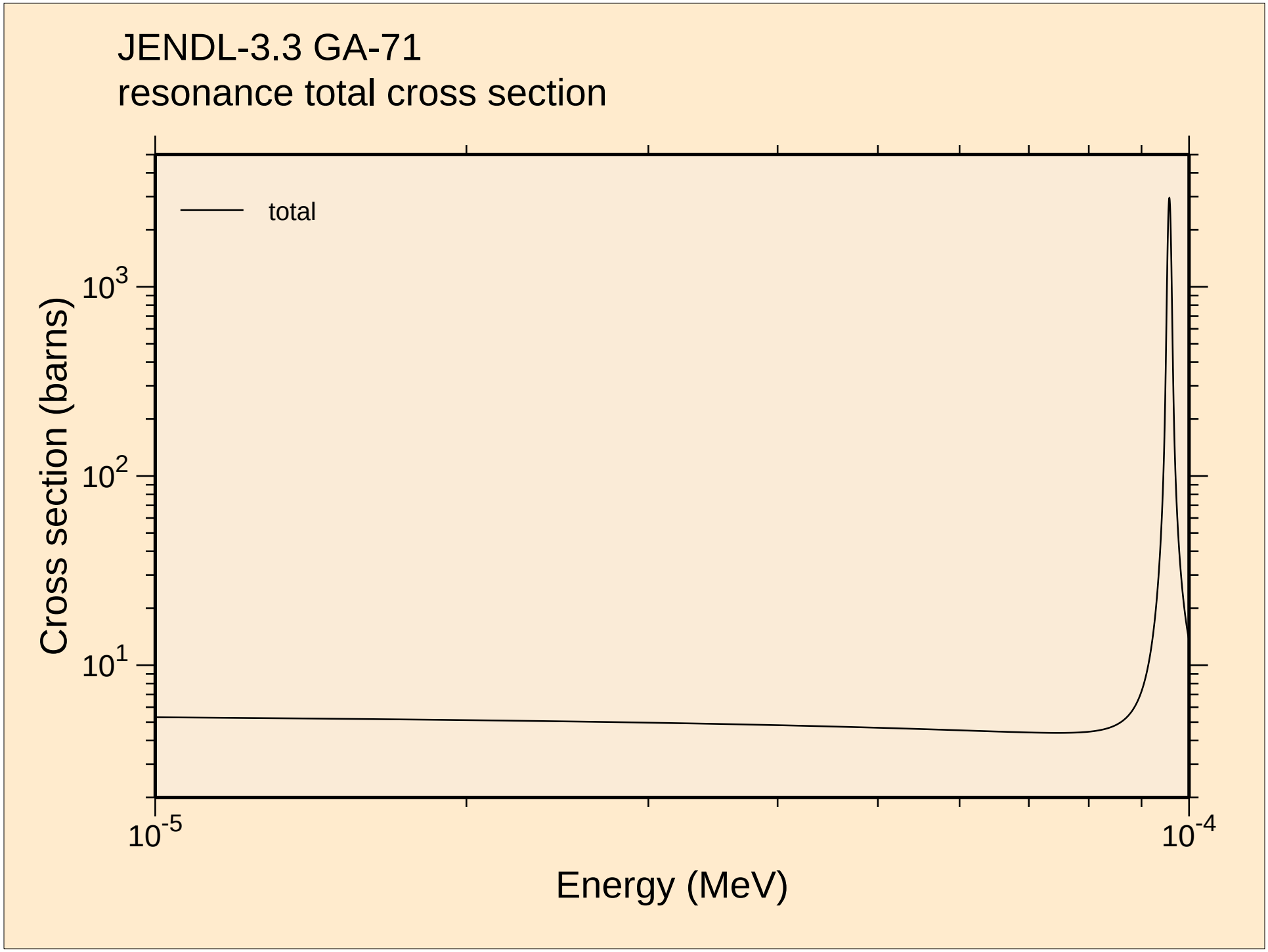
JENDL-3.3 GA-71
resonance total cross section
total
Cross section (barns)
10^3
10^2
10^1
10^{-5}
10^{-4}
Energy (MeV)

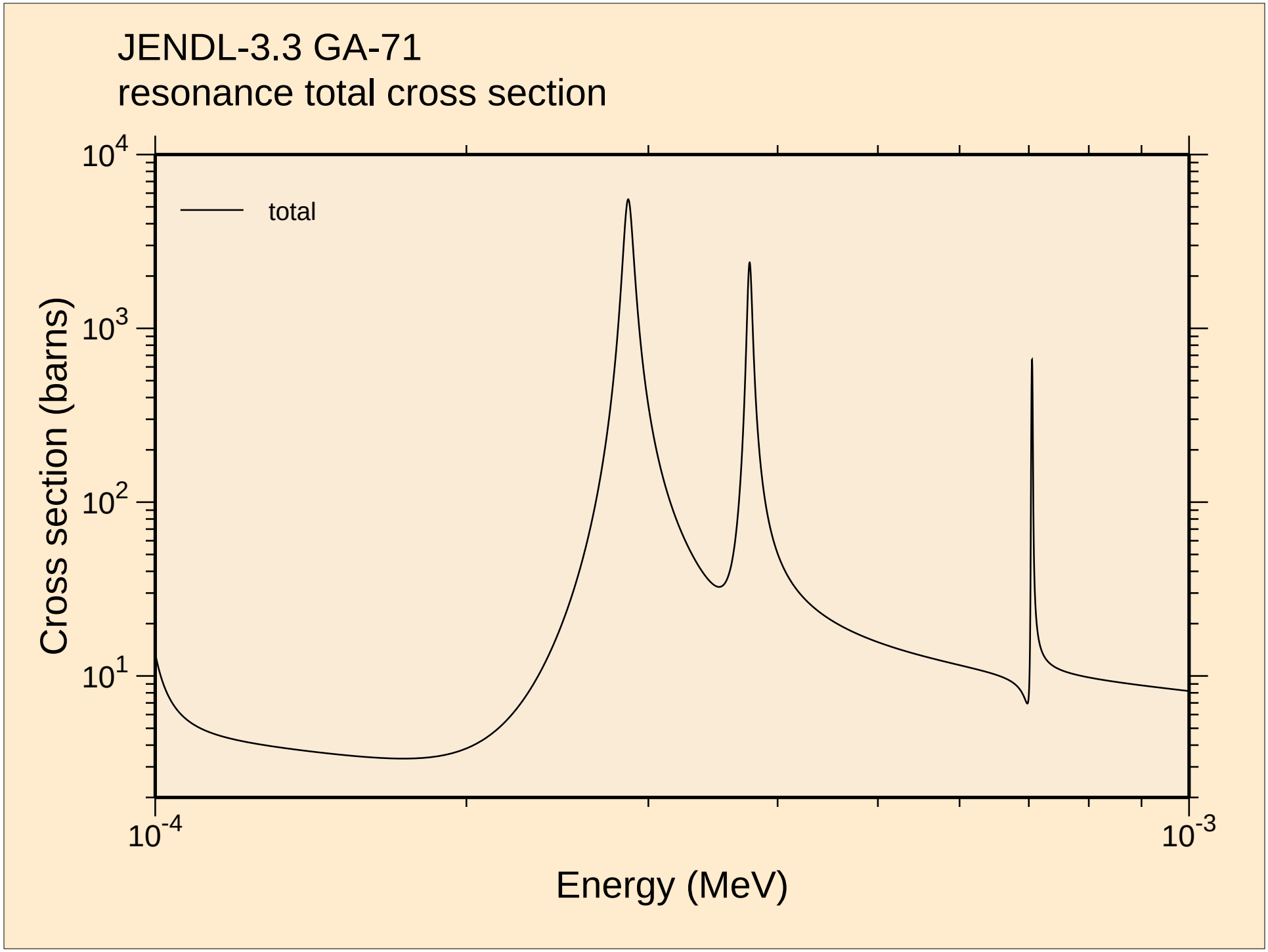
JENDL-3.3 GA-71
resonance total cross section
total
Cross section (barns)
10^4
10^3
10^2
10^1
10^{-4}
10^{-3}
Energy (MeV)

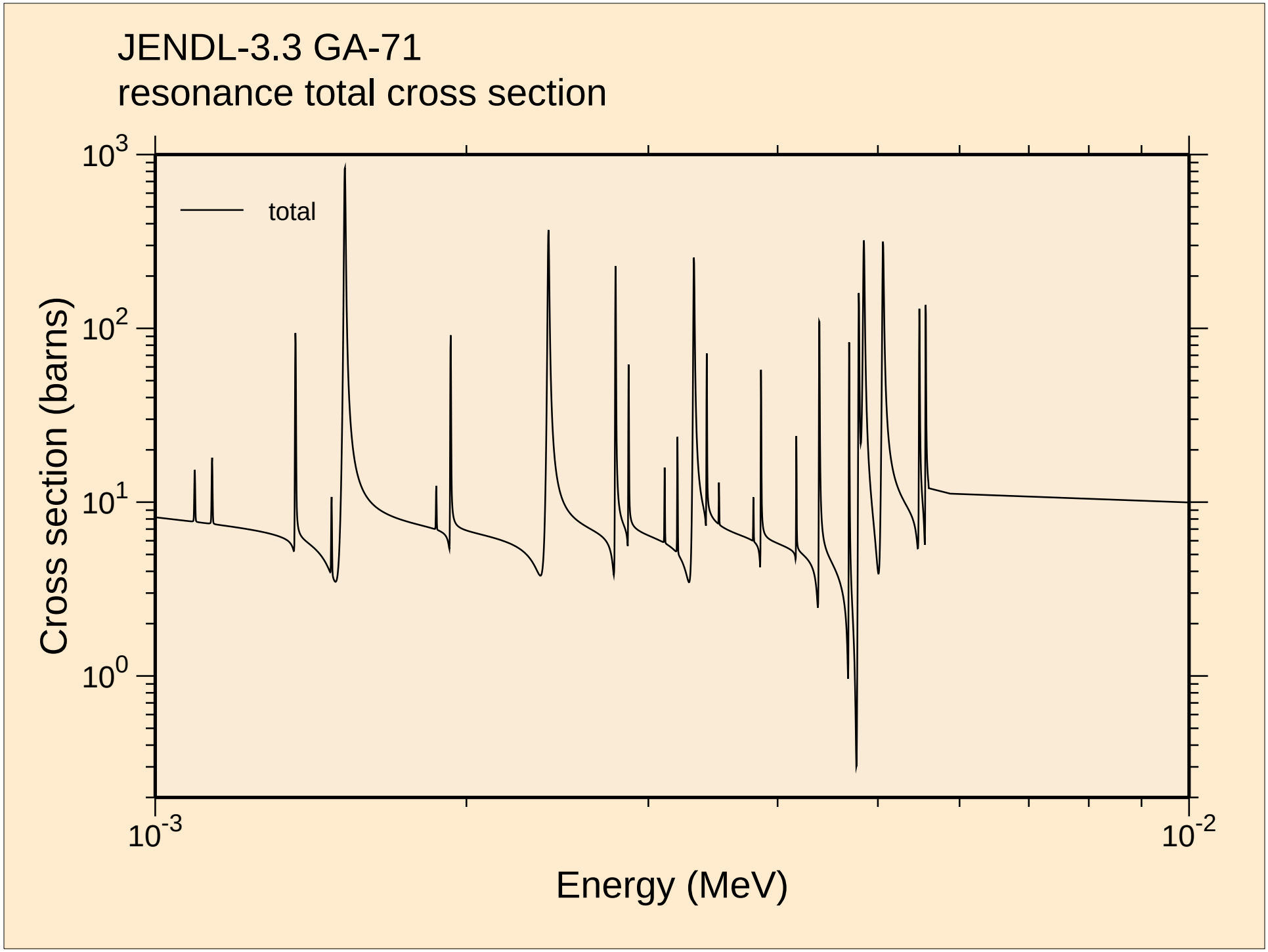
JENDL-3.3 GA-71
resonance total cross section
total
Cross section (barns)
Energy (MeV)
10^3
10^2
10^1
10^0
10^-3
10^-2

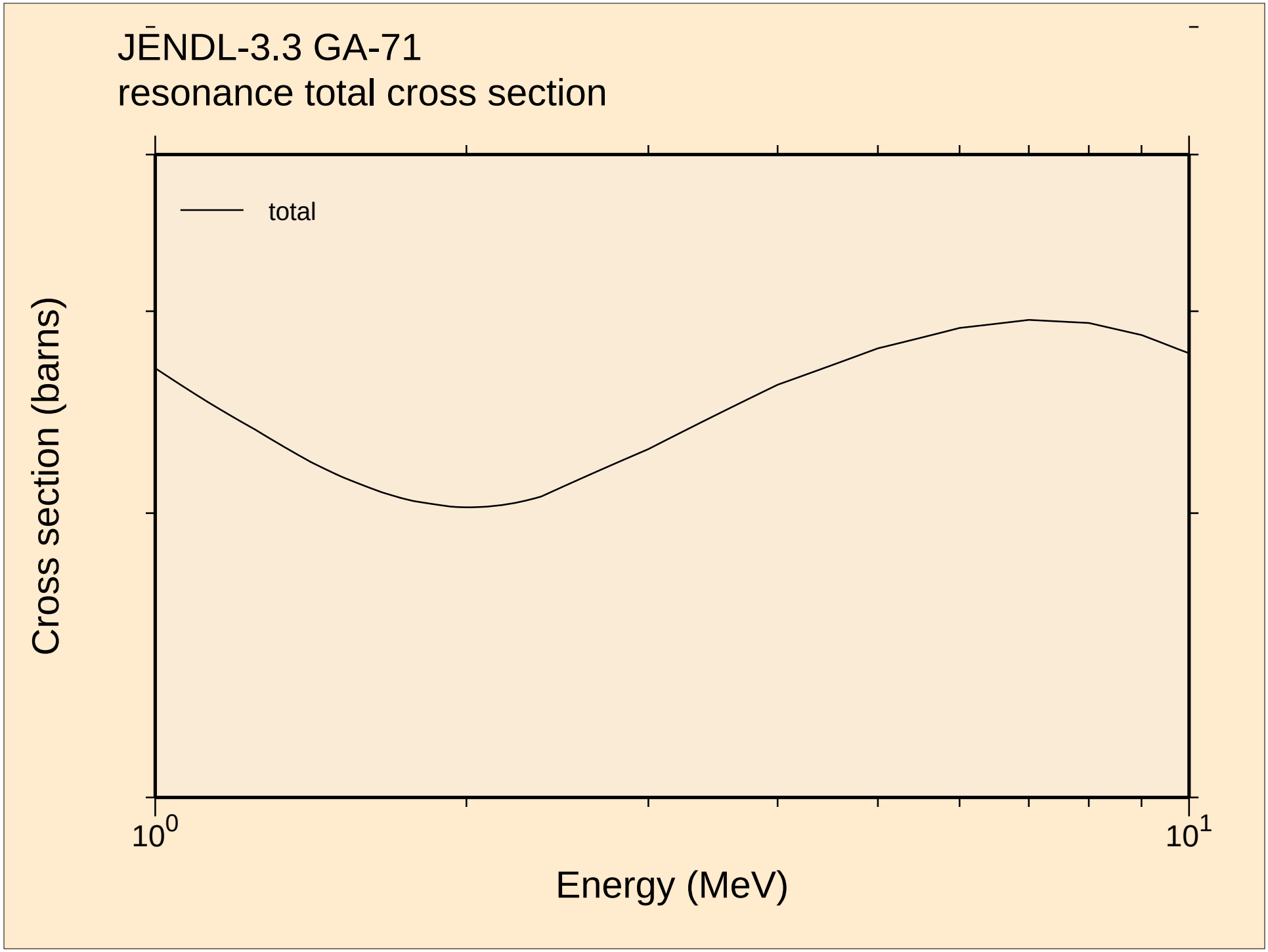
JENDL-3.3 GA-71
resonance total cross section
total
Cross section (barns)
10^0
10^1
Energy (MeV)

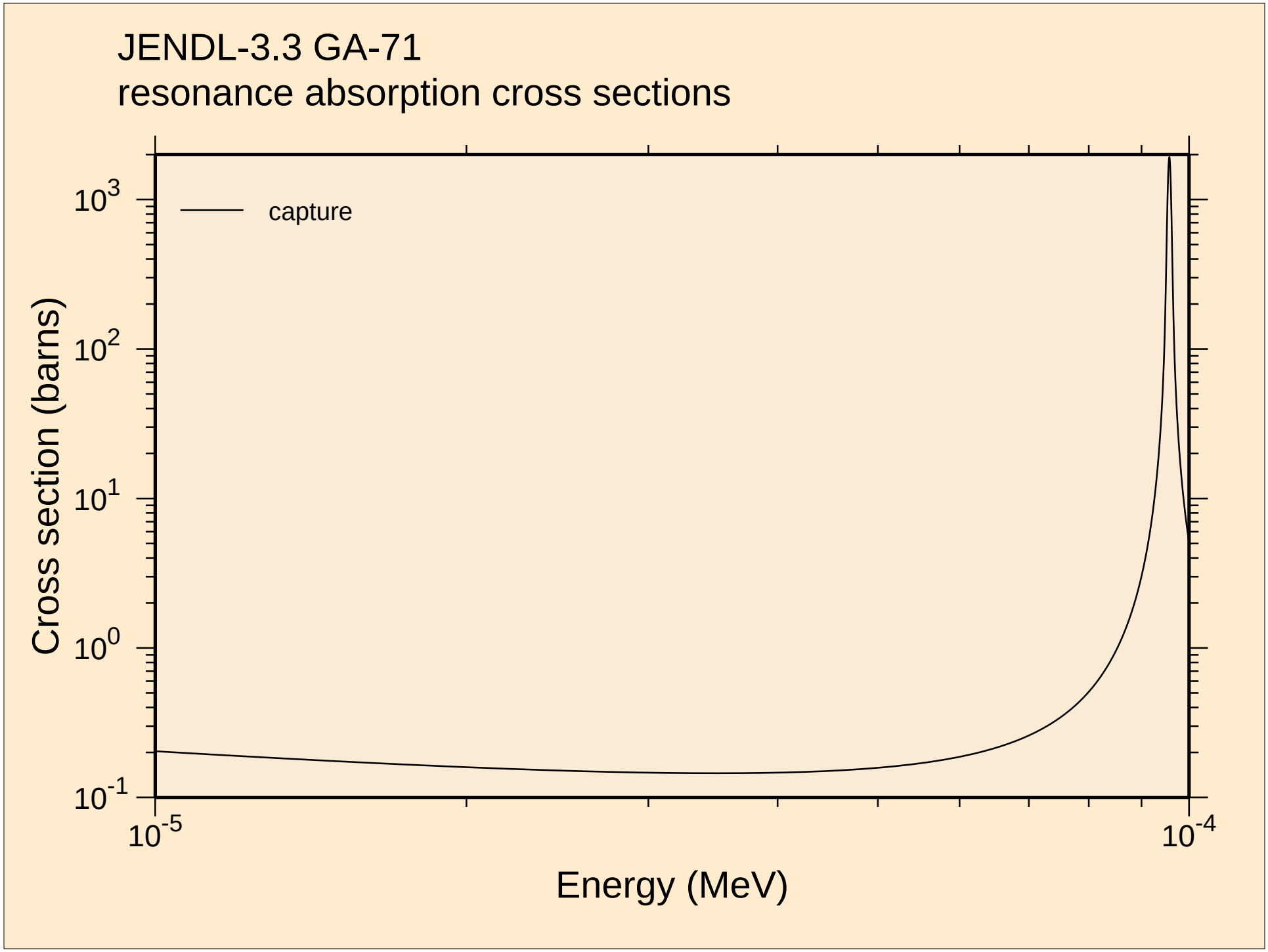
JENDL-3.3 GA-71
resonance absorption cross sections
capture
Cross section (barns)
10^{3}
10^{2}
10^{1}
10^{0}
10^{-1}
10^{-5}
10^{-4}
Energy (MeV)

JENDL-3.3 GA-71
resonance absorption cross sections

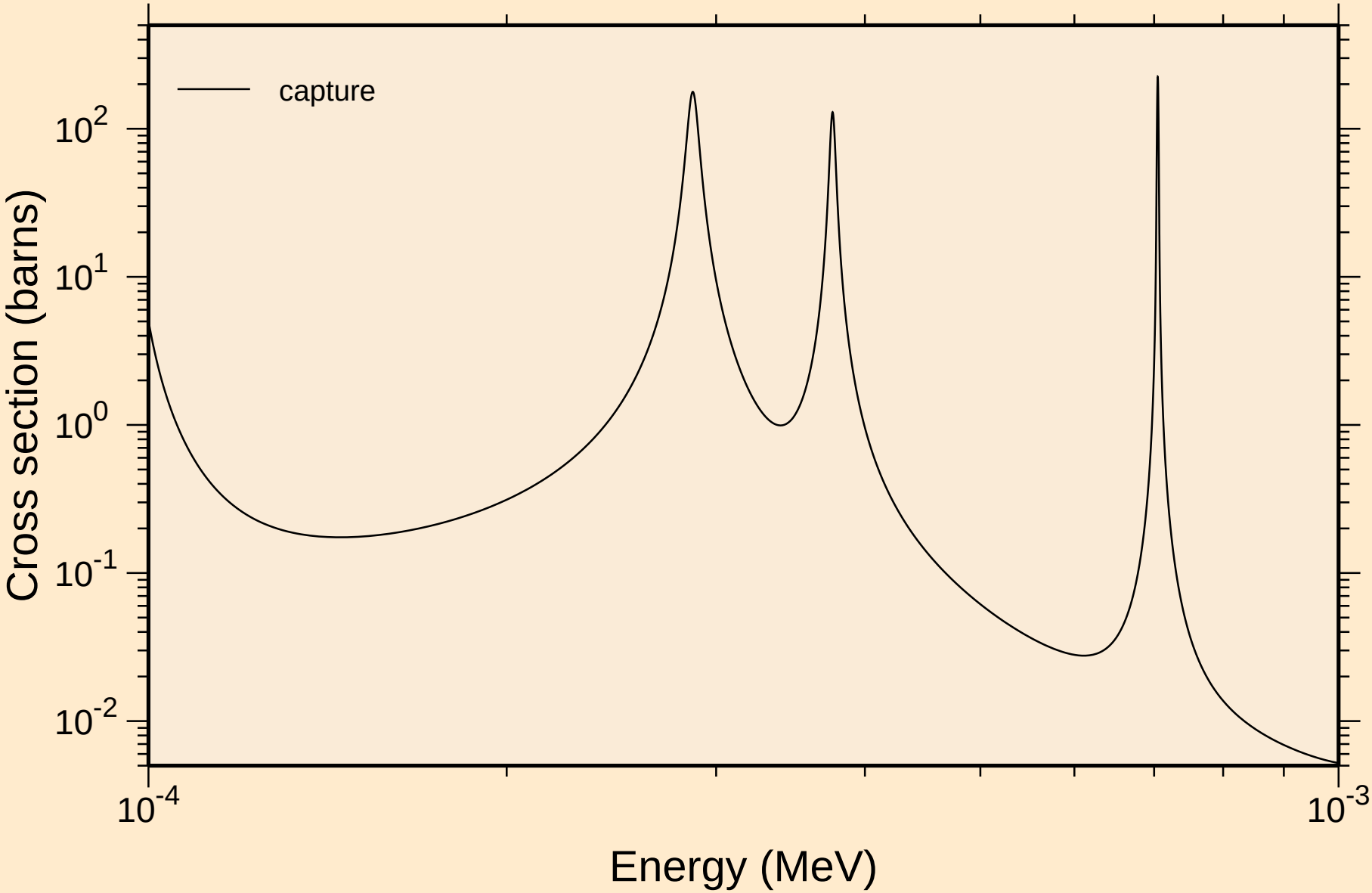

JENDL-3.3 GA-71
resonance absorption cross sections

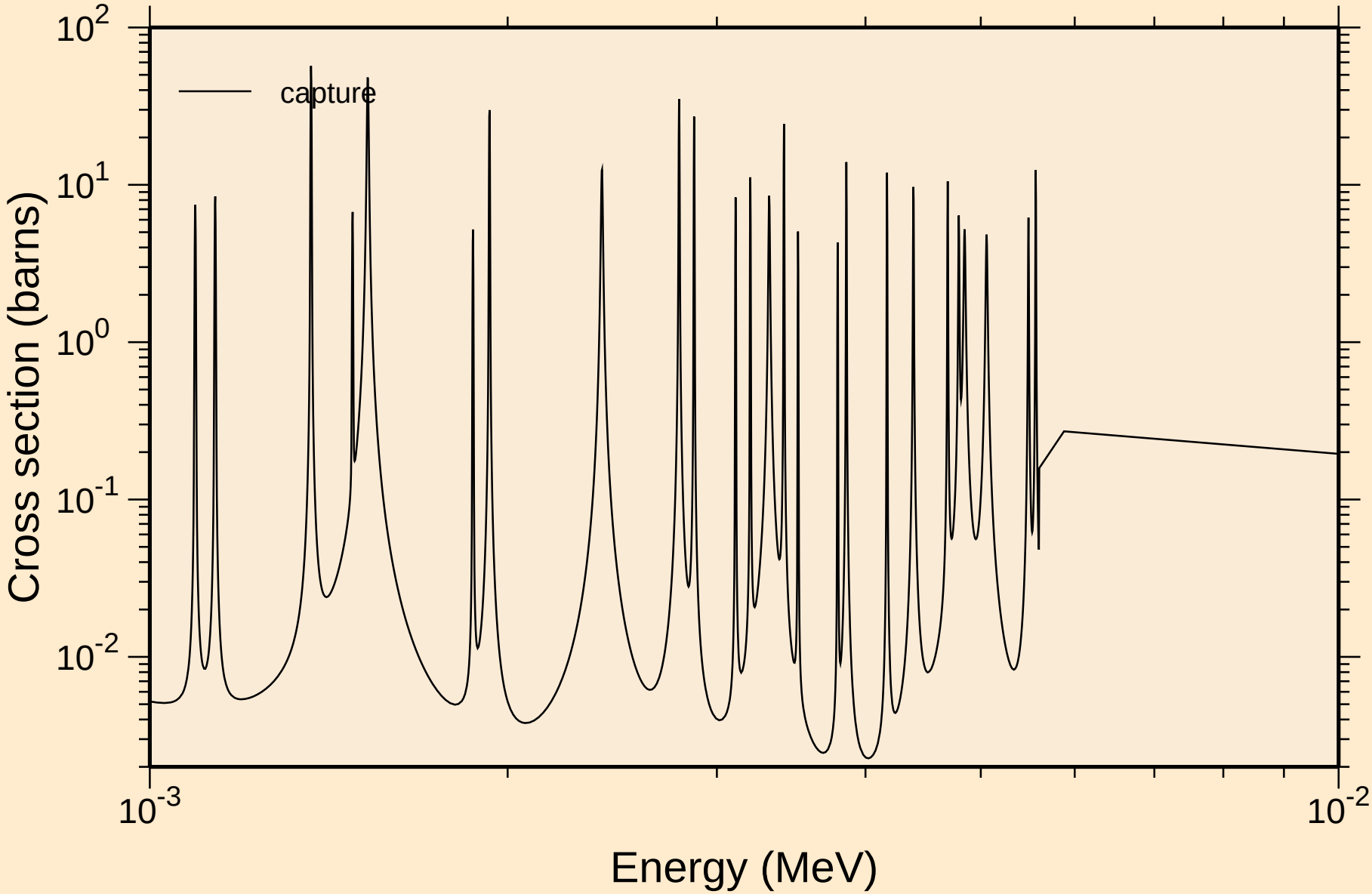

JENDL-3.3 GA-71
resonance absorption cross sections

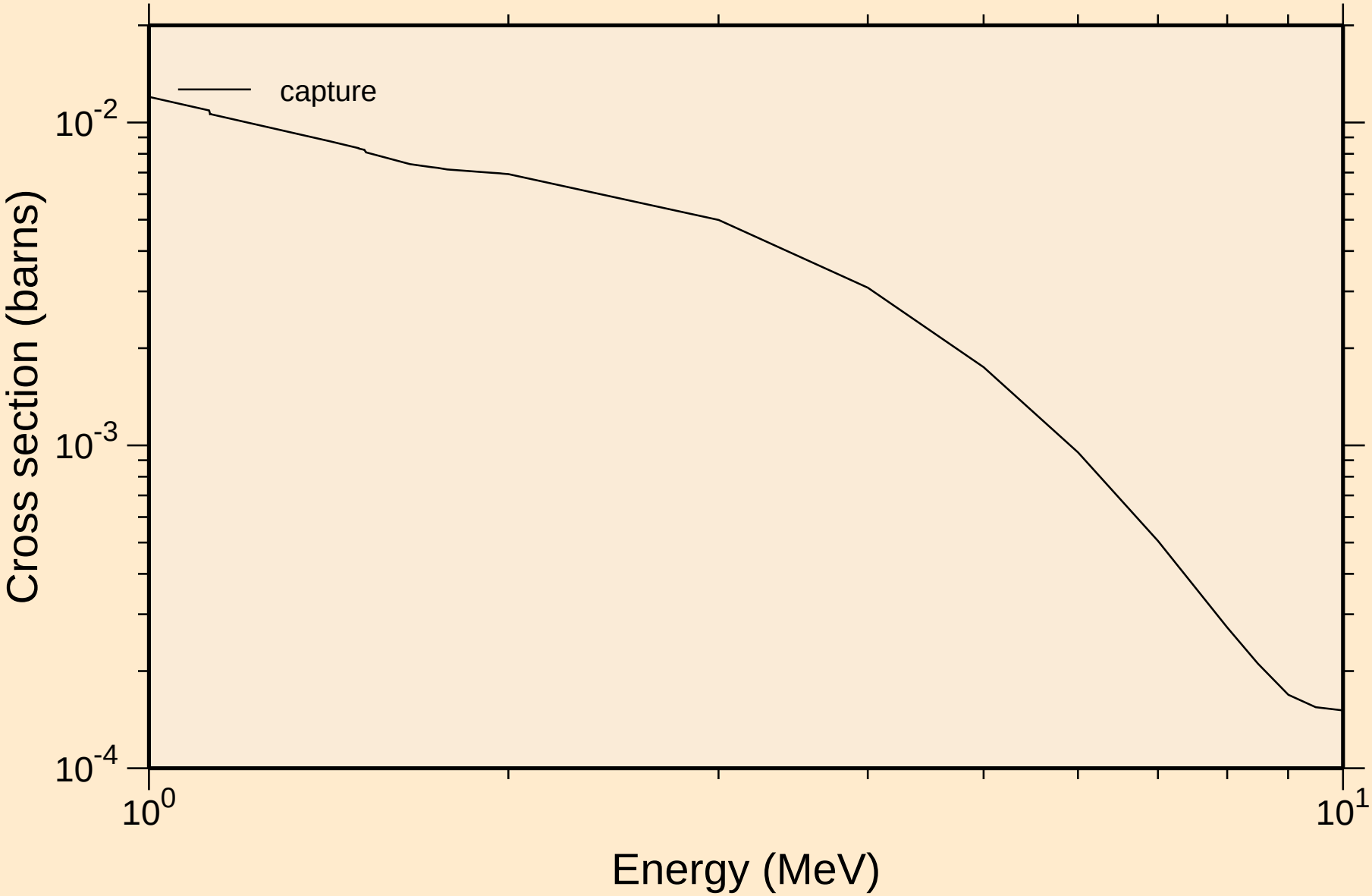

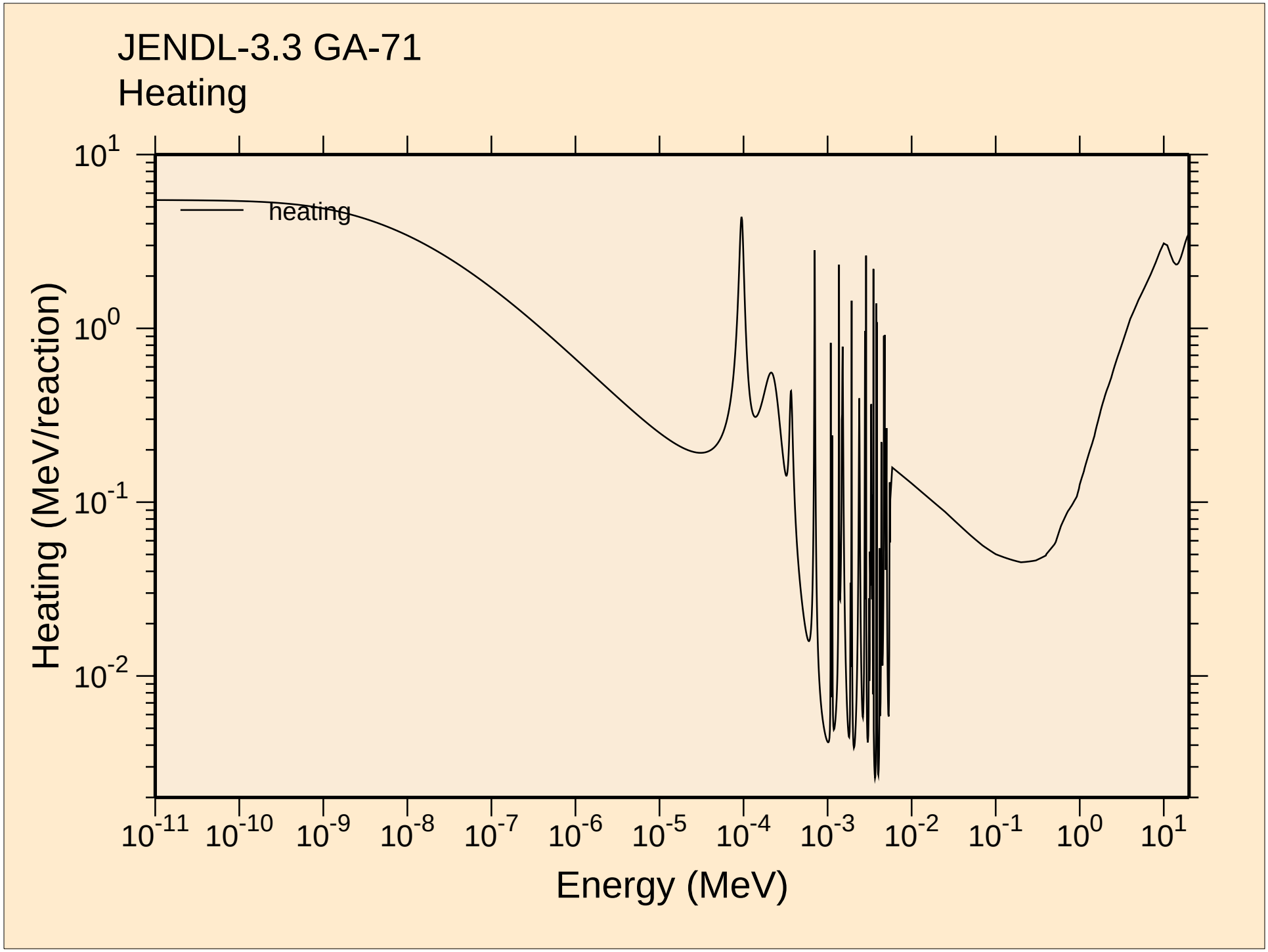
JENDL-3.3 GA-71
Heating
heating
Heating (MeV/reaction)
Energy (MeV)
10^1
10^0
10^-1
10^-2
10^-11
10^-10
10^-9
10^-8
10^-7
10^-6
10^-5
10^-4
10^-3
10^-2
10^-1
10^0
10^1

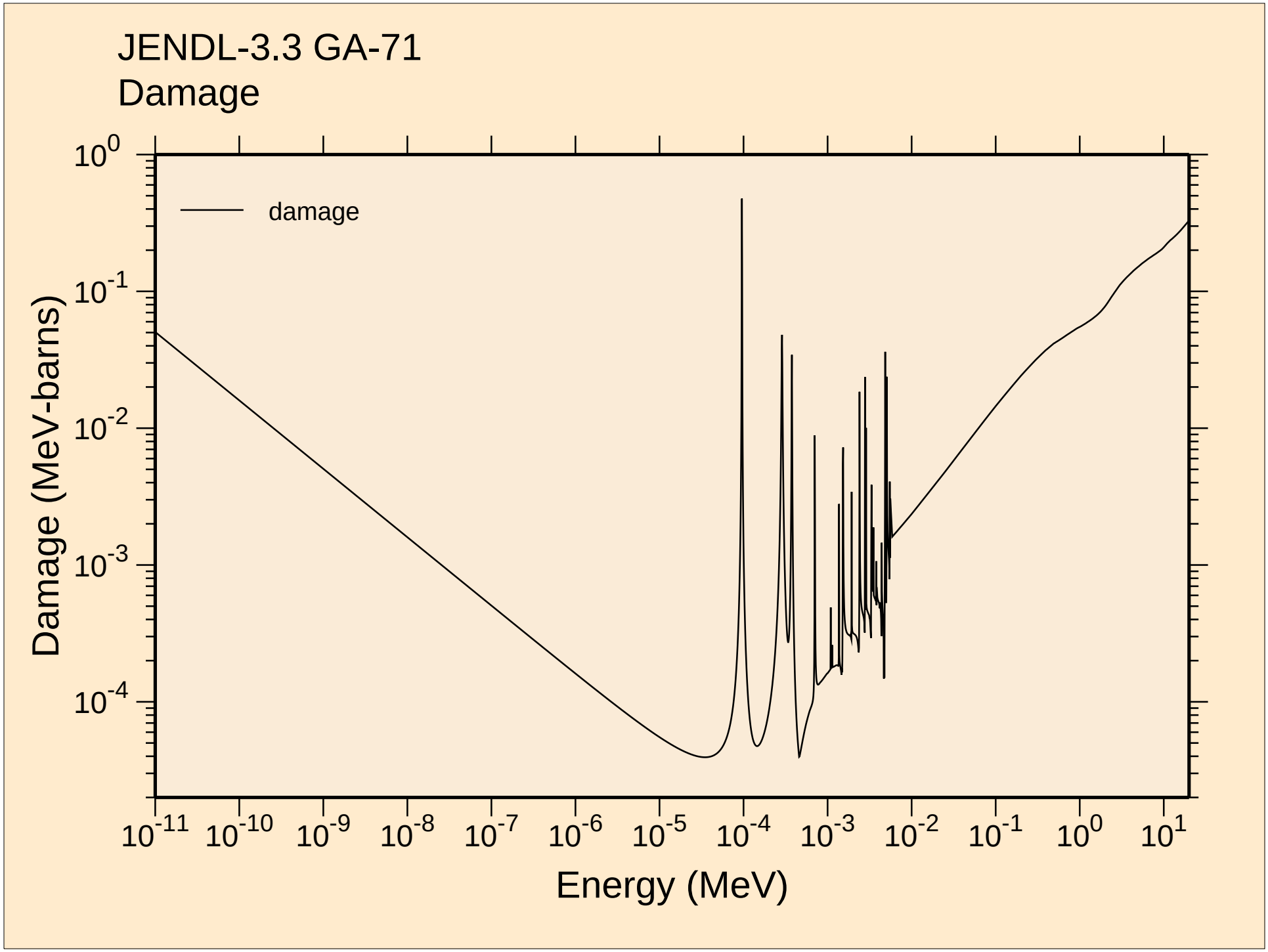
JENDL-3.3 GA-71
Damage
damage
Damage (MeV-barns)
Energy (MeV)
10^0
10^-1
10^-2
10^-3
10^-4
10^-11
10^-10
10^-9
10^-8
10^-7
10^-6
10^-5
10^-4
10^-3
10^-2
10^-1
10^0
10^1

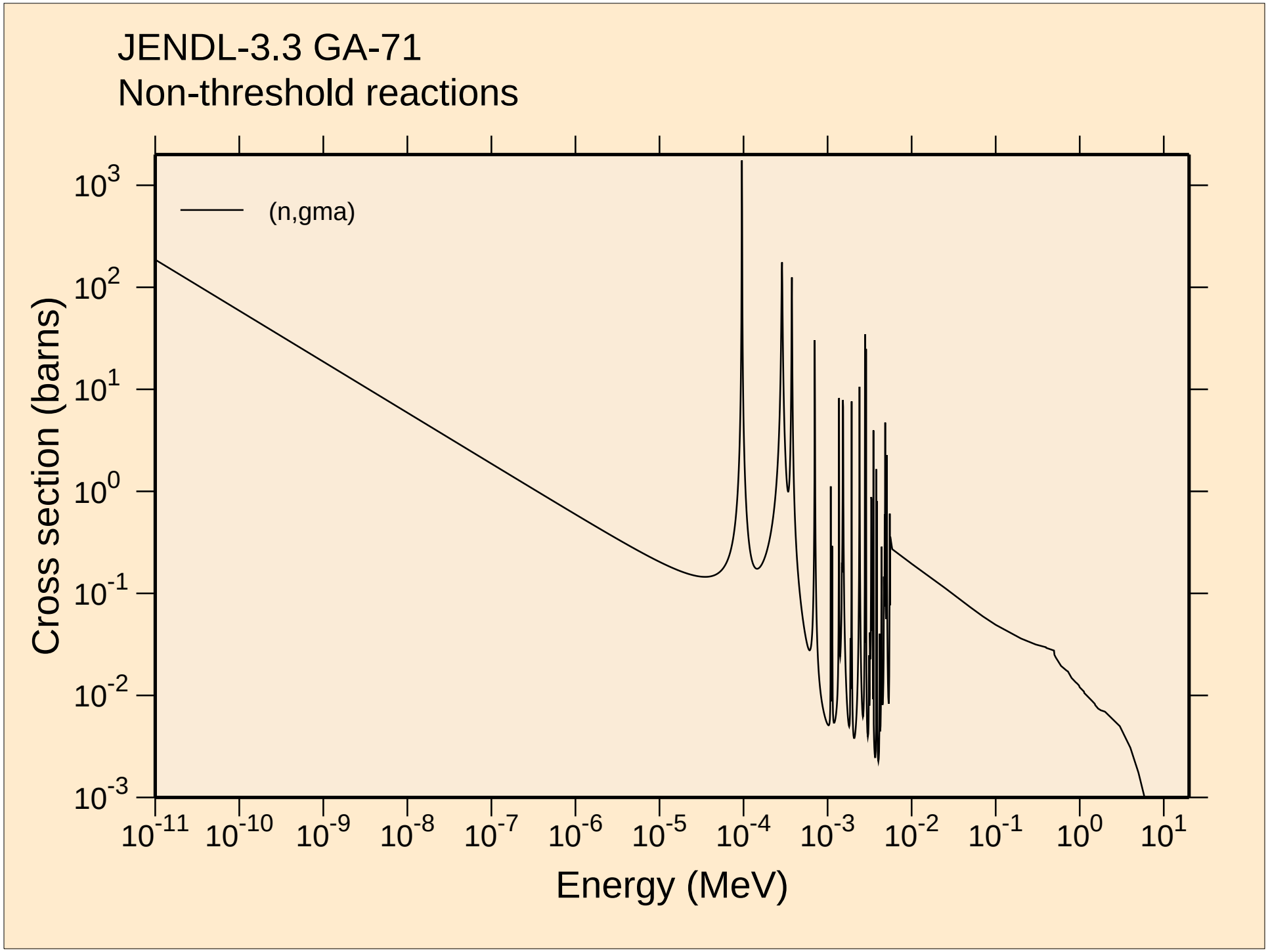
JENDL-3.3 GA-71
Non-threshold reactions
(n,gma)
Cross section (barns)
Energy (MeV)
10^3
10^2
10^1
10^0
10^-1
10^-2
10^-3
10^-11
10^-10
10^-9
10^-8
10^-7
10^-6
10^-5
10^-4
10^-3
10^-2
10^-1
10^0
10^1

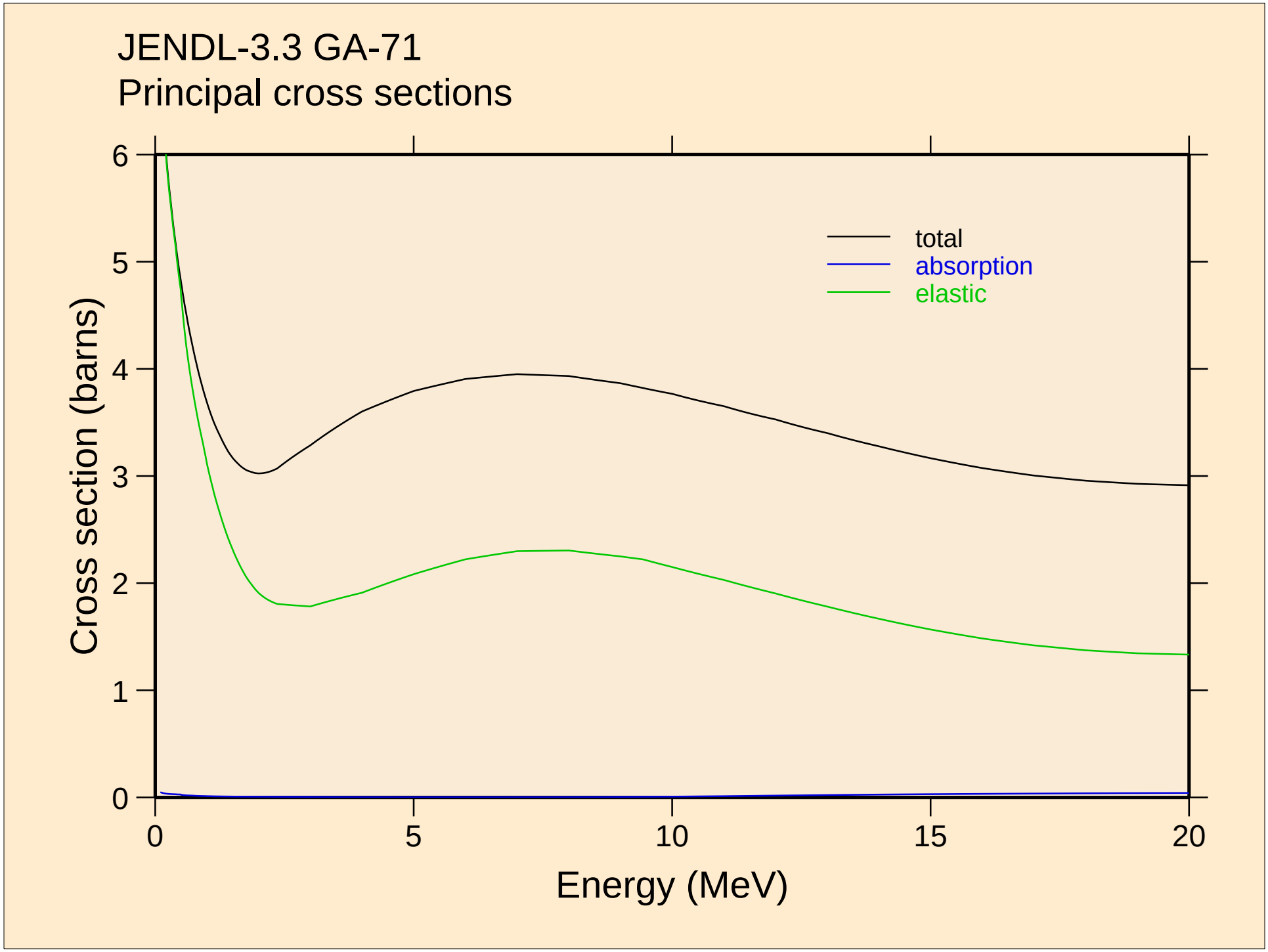
JENDL-3.3 GA-71
Principal cross sections
total
absorption
elastic
Cross section (barns)
Energy (MeV)
0
1
2
3
4
5
6
0
5
10
15
20

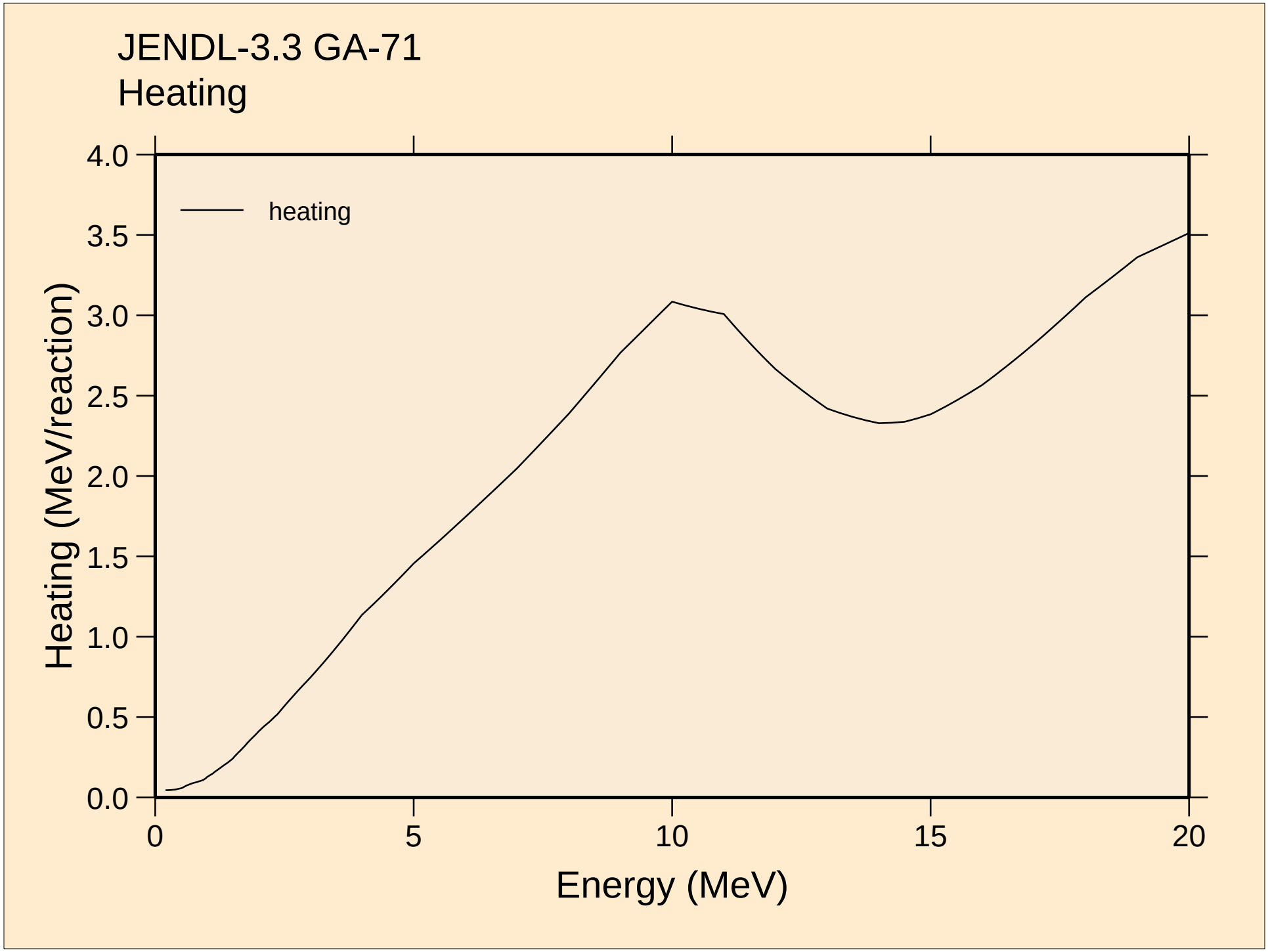
JENDL-3.3 GA-71
Heating
heating
Heating (MeV/reaction)
4.0
3.5
3.0
2.5
2.0
1.5
1.0
0.5
0.0
0
5
10
15
20
Energy (MeV)

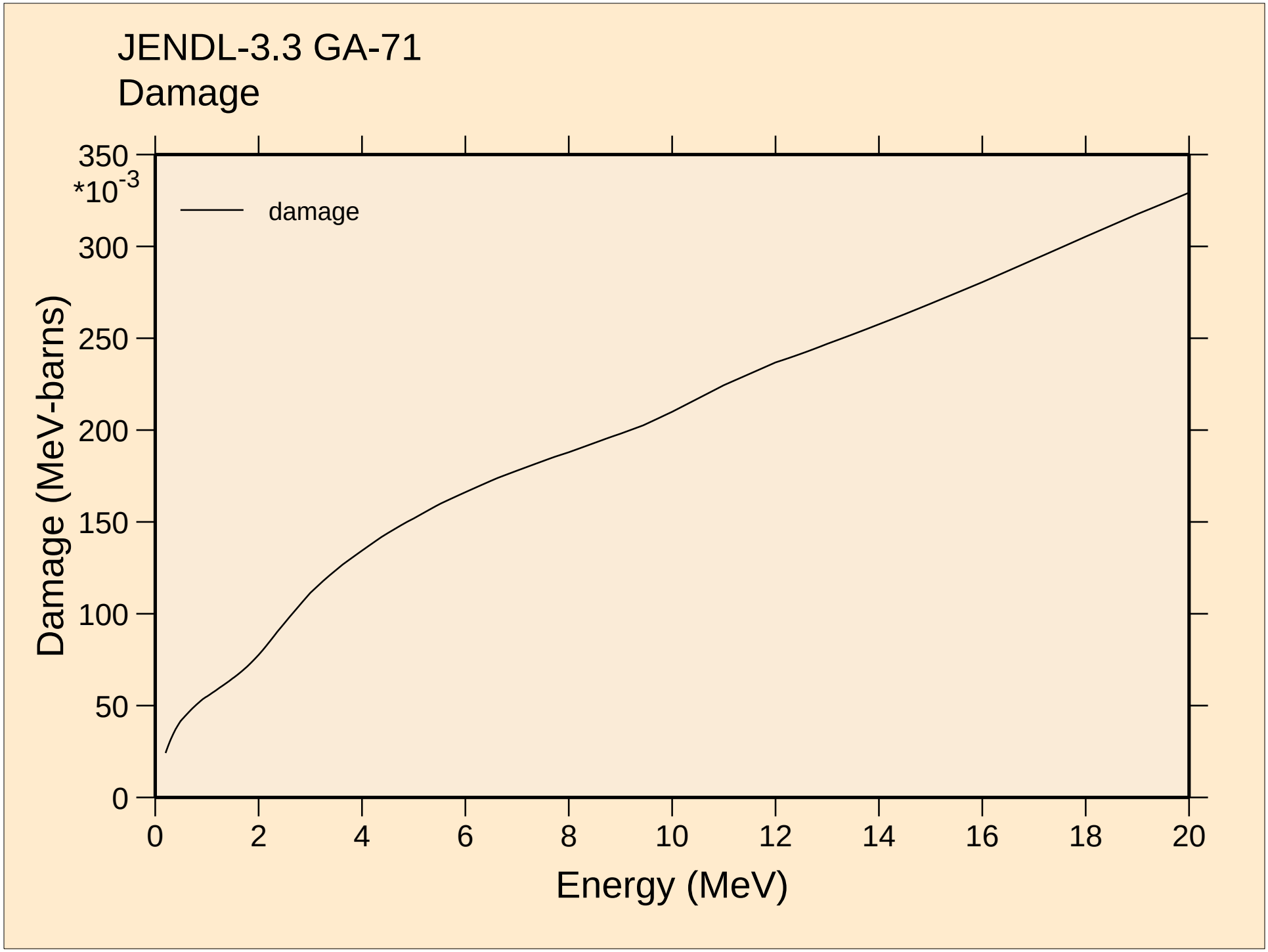
JENDL-3.3 GA-71
Damage
damage
*10-3
350
300
250
200
150
100
50
0
Damage (MeV-barns)
0
2
4
6
8
10
12
14
16
18
20
Energy (MeV)

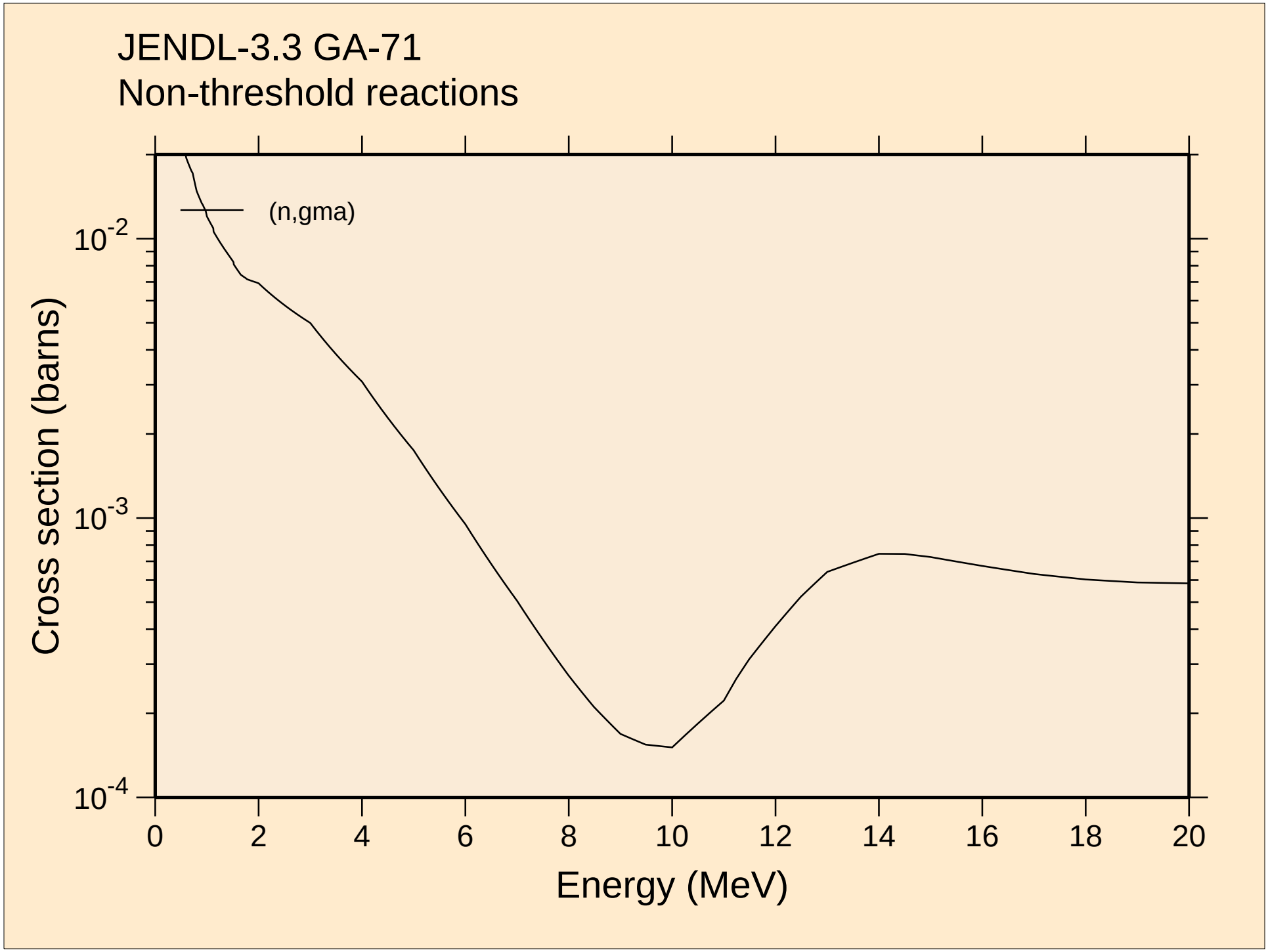
JENDL-3.3 GA-71
Non-threshold reactions
(n,gma)
Cross section (barns)
10-2
10-3
10-4
0
2
4
6
8
10
12
14
16
18
20
Energy (MeV)

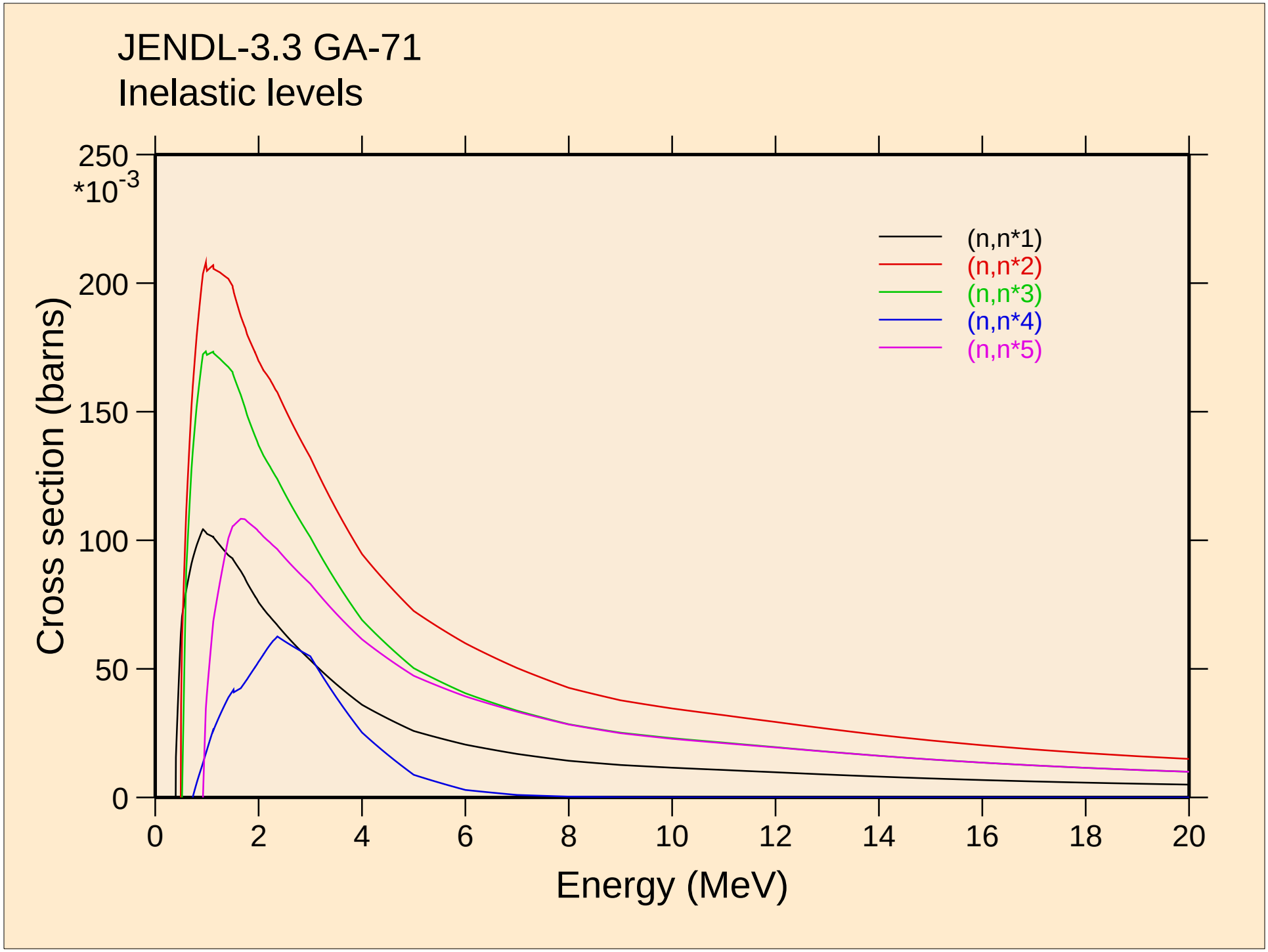
JENDL-3.3 GA-71
Inelastic levels
250
*10-3
200
150
100
50
0
Cross section (barns)
0
2
4
6
8
10
12
14
16
18
20
Energy (MeV)
(n,n*1)
(n,n*2)
(n,n*3)
(n,n*4)
(n,n*5)

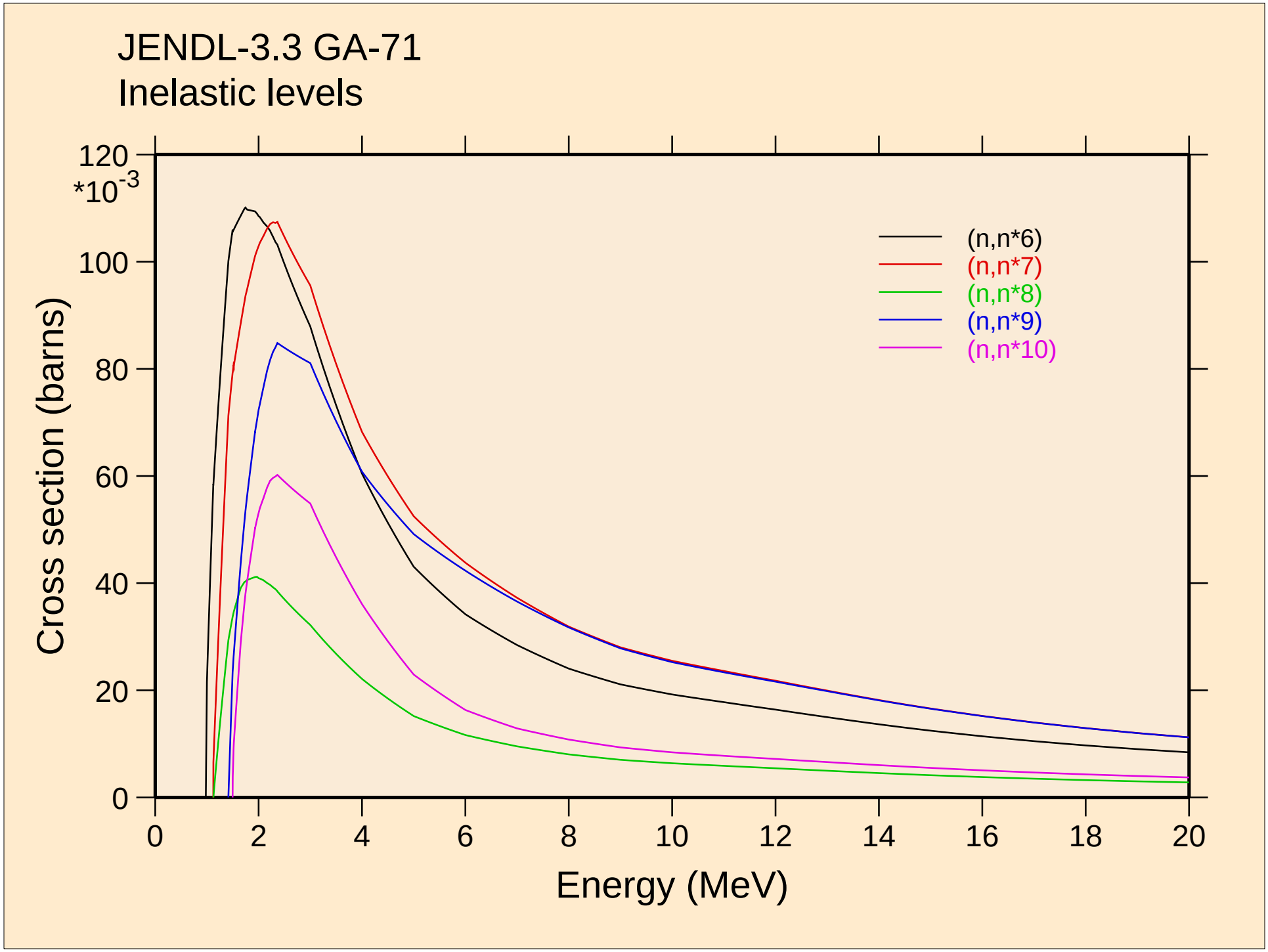
JENDL-3.3 GA-71
Inelastic levels
Cross section (barns)
*10^-3
120
100
80
60
40
20
0
0
2
4
6
8
10
12
14
16
18
20
Energy (MeV)
(n,n*6)
(n,n*7)
(n,n*8)
(n,n*9)
(n,n*10)

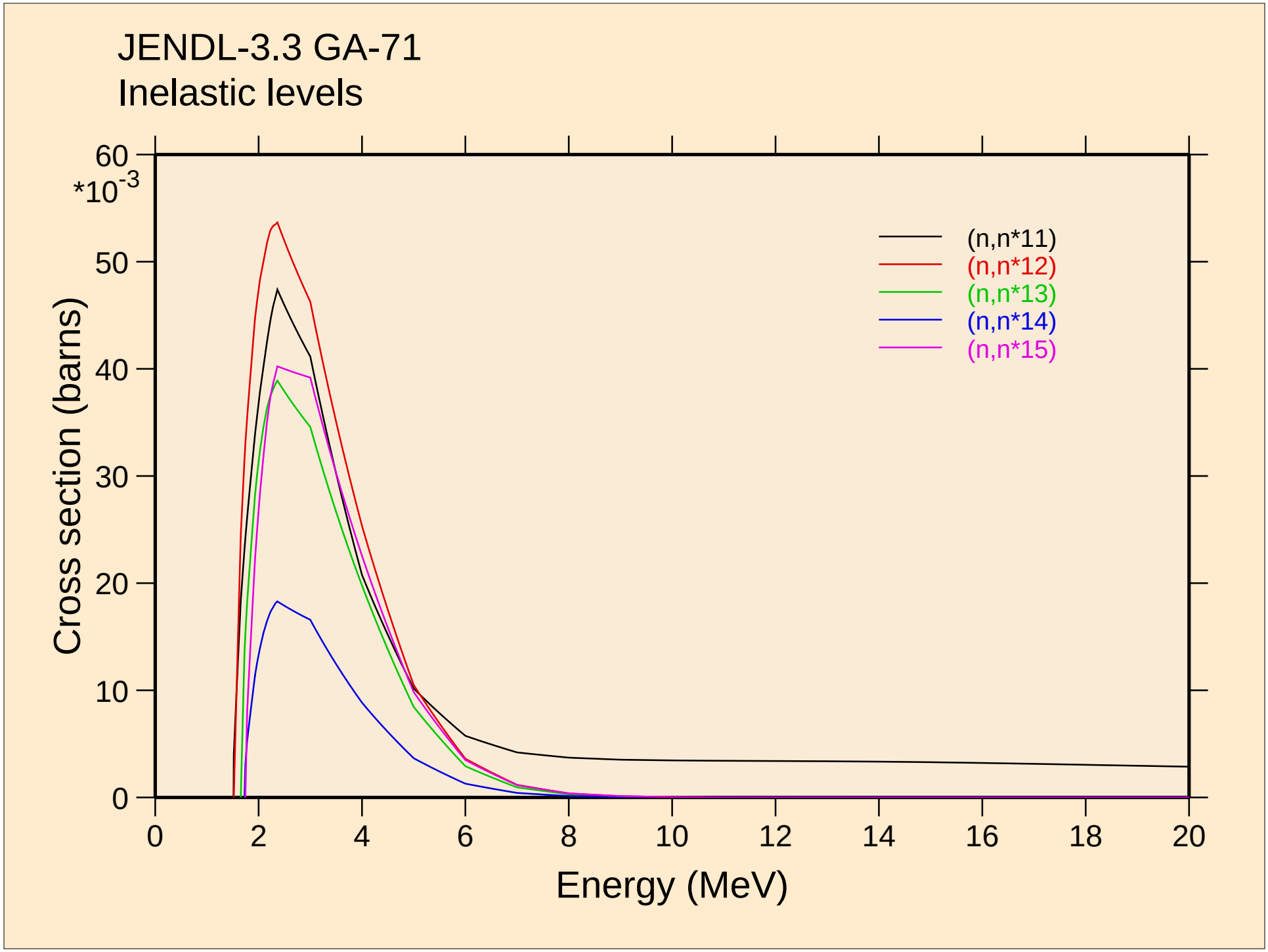
JENDL-3.3 GA-71
Inelastic levels
Cross section (barns)
*10-3
60
50
40
30
20
10
0
0
2
4
6
8
10
12
14
16
18
20
Energy (MeV)
(n,n*11)
(n,n*12)
(n,n*13)
(n,n*14)
(n,n*15)

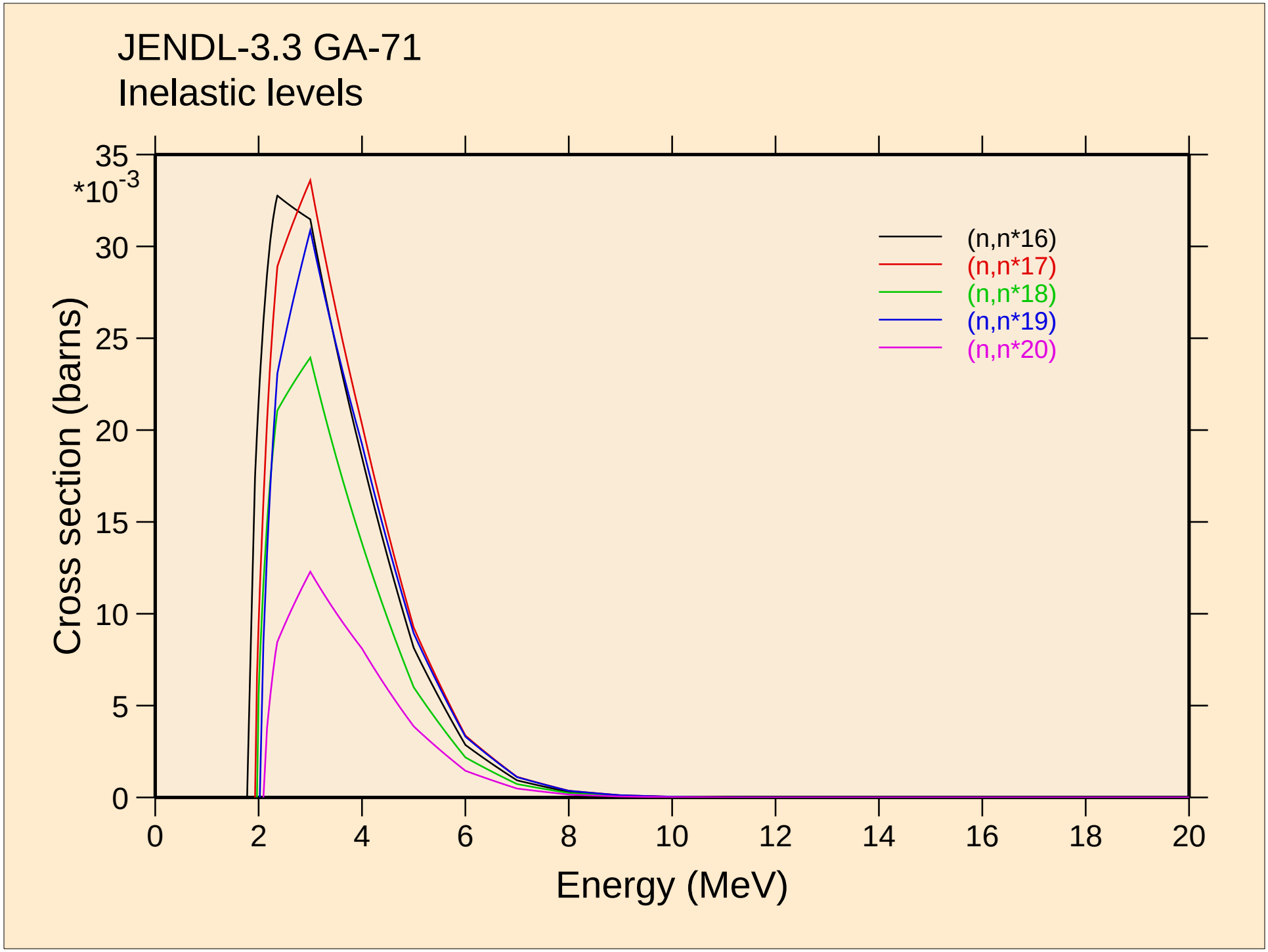
JENDL-3.3 GA-71
Inelastic levels
*10-3
Cross section (barns)
Energy (MeV)
(n,n*16)
(n,n*17)
(n,n*18)
(n,n*19)
(n,n*20)
0
5
10
15
20
25
30
35
0
2
4
6
8
10
12
14
16
18
20

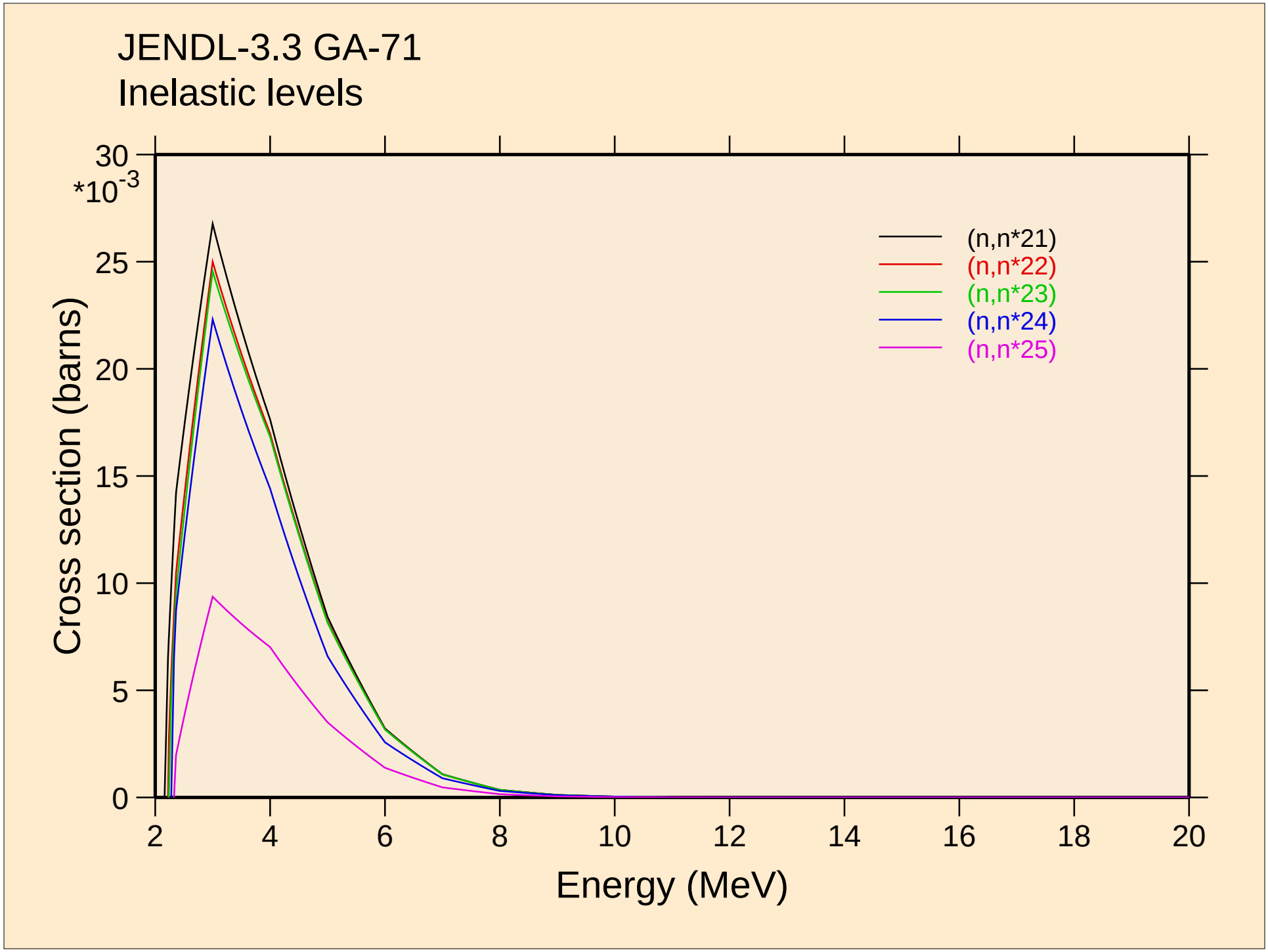
JENDL-3.3 GA-71
Inelastic levels
*10-3
30
25
20
15
10
5
0
Cross section (barns)
2
4
6
8
10
12
14
16
18
20
Energy (MeV)
(n,n*21)
(n,n*22)
(n,n*23)
(n,n*24)
(n,n*25)

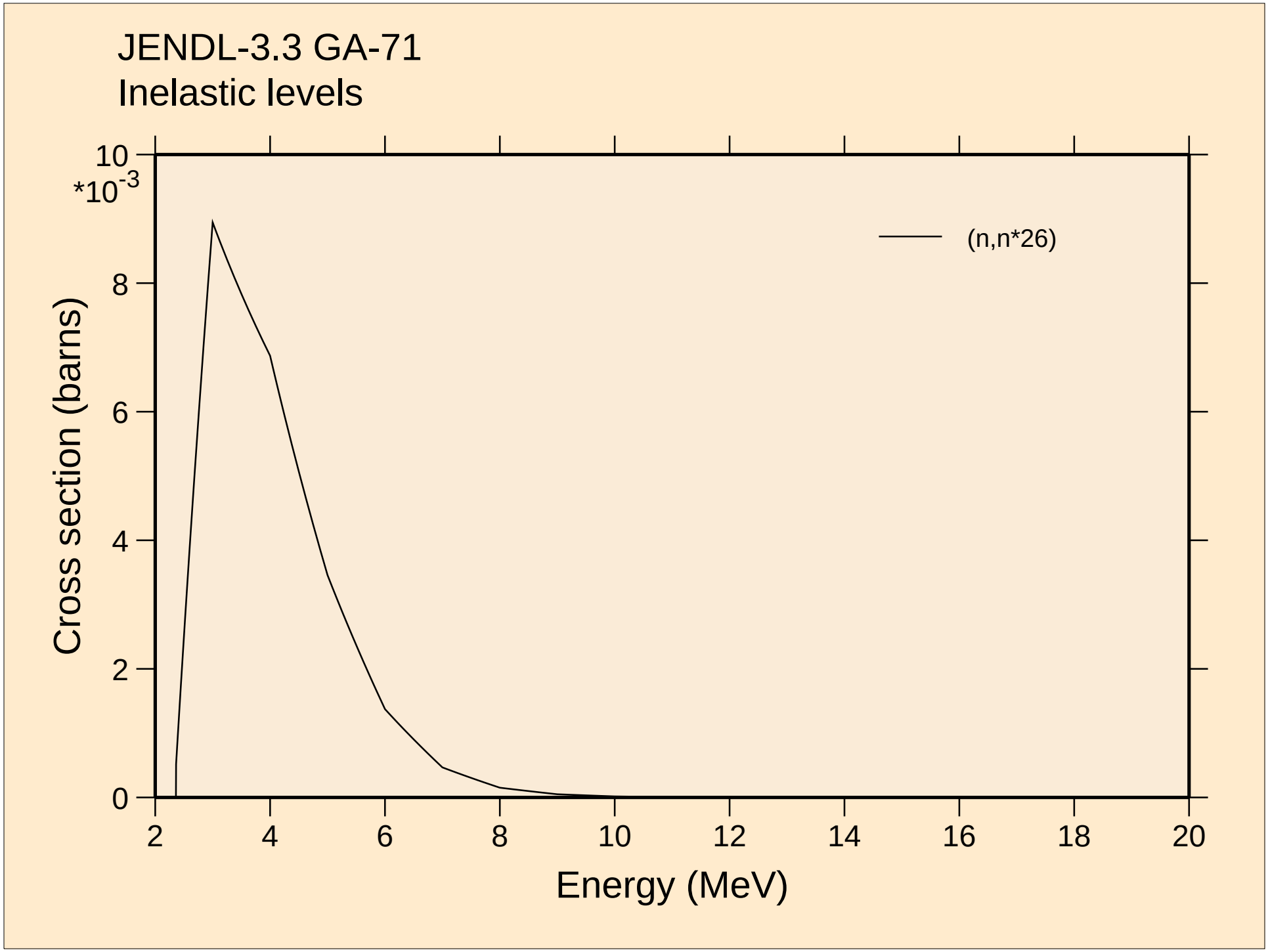
JENDL-3.3 GA-71
Inelastic levels
(n,n*26)
Cross section (barns)
*10-3
10
8
6
4
2
0
2
4
6
8
10
12
14
16
18
20
Energy (MeV)

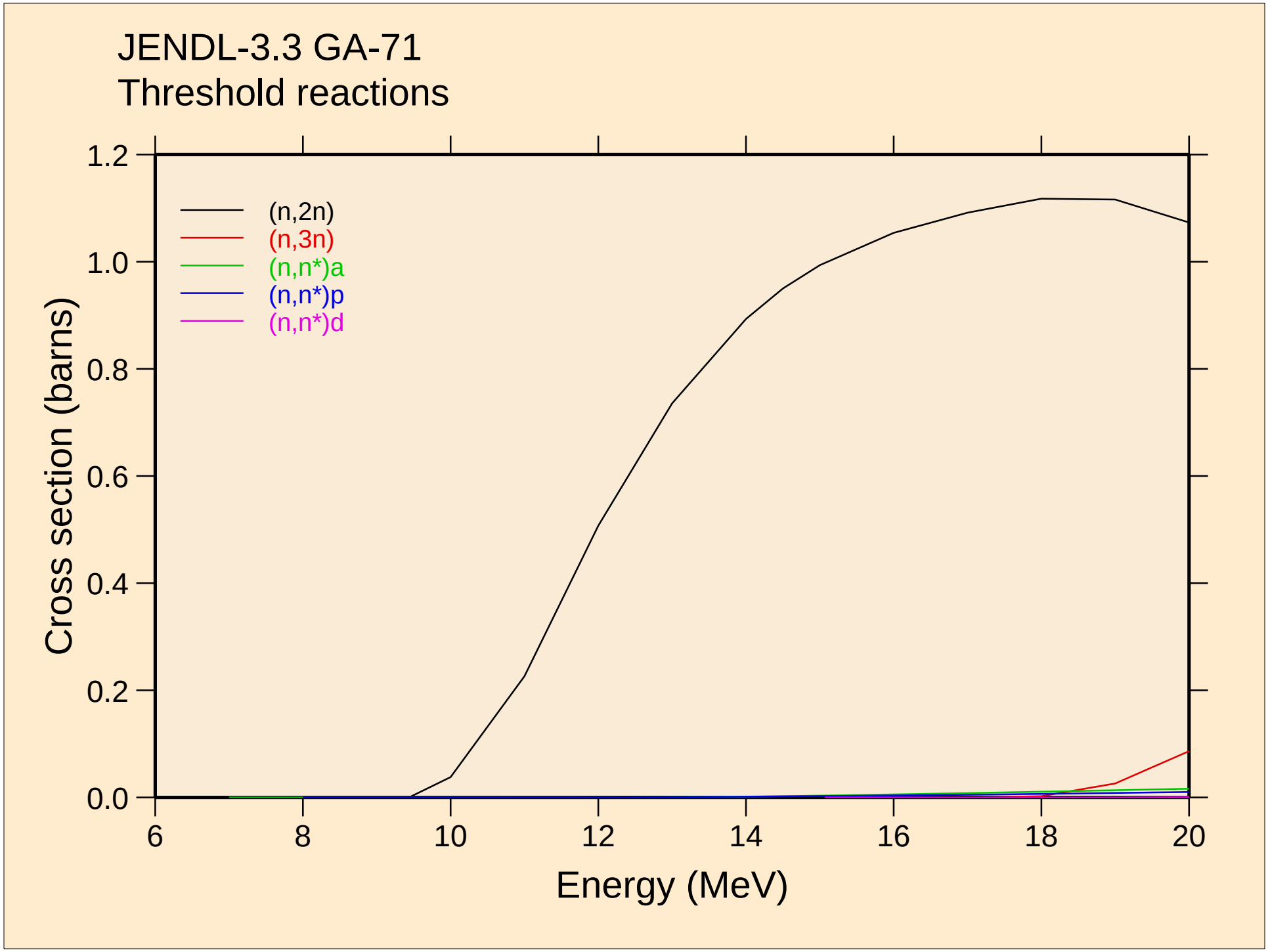
JENDL-3.3 GA-71
Threshold reactions
(n,2n)
(n,3n)
(n,n*)a
(n,n*)p
(n,n*)d
Cross section (barns)
Energy (MeV)
0.0
0.2
0.4
0.6
0.8
1.0
1.2
6
8
10
12
14
16
18
20

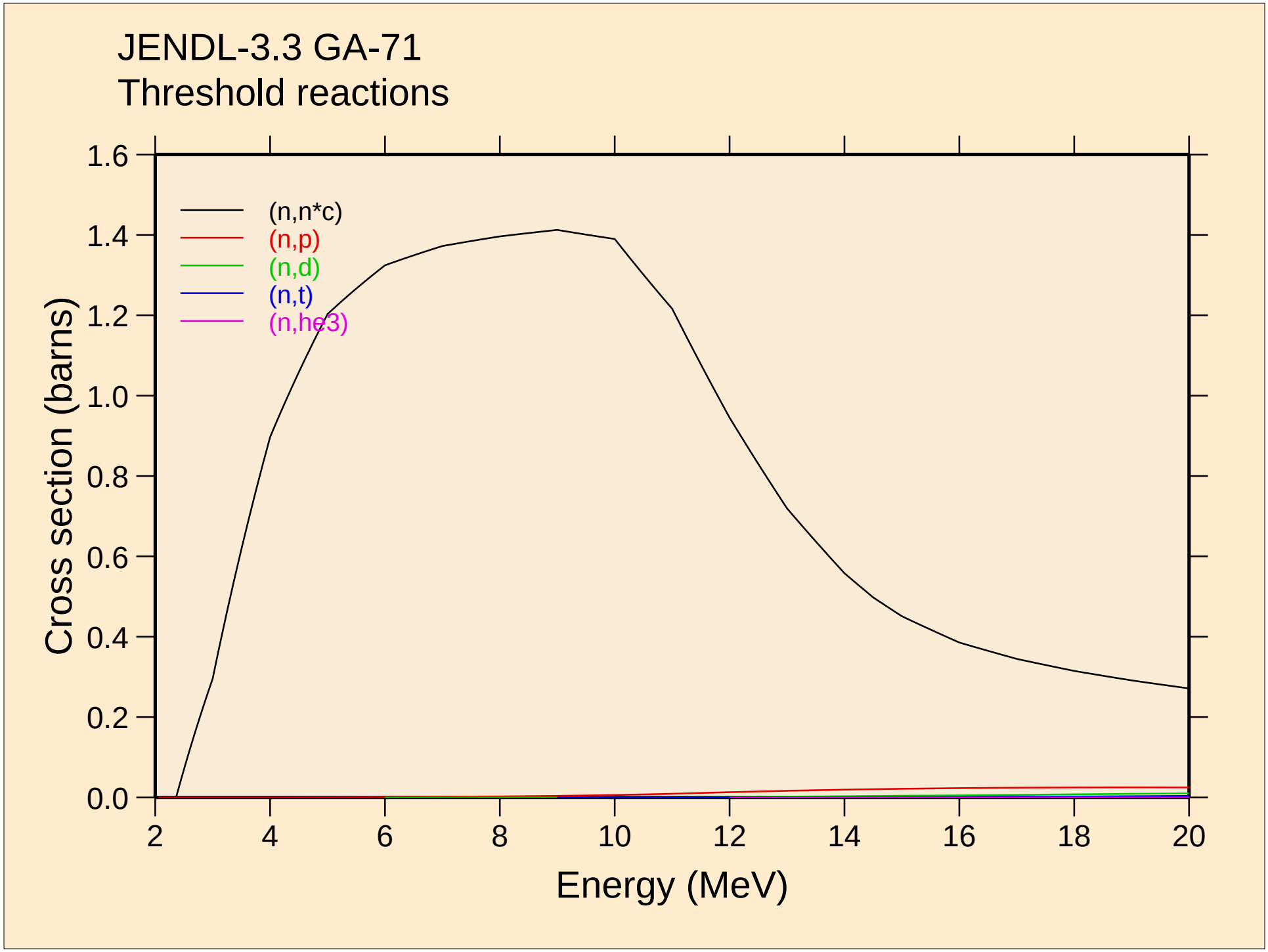
JENDL-3.3 GA-71
Threshold reactions
(n,n*c)
(n,p)
(n,d)
(n,t)
(n,he3)
Cross section (barns)
Energy (MeV)
0.0
0.2
0.4
0.6
0.8
1.0
1.2
1.4
1.6
2
4
6
8
10
12
14
16
18
20

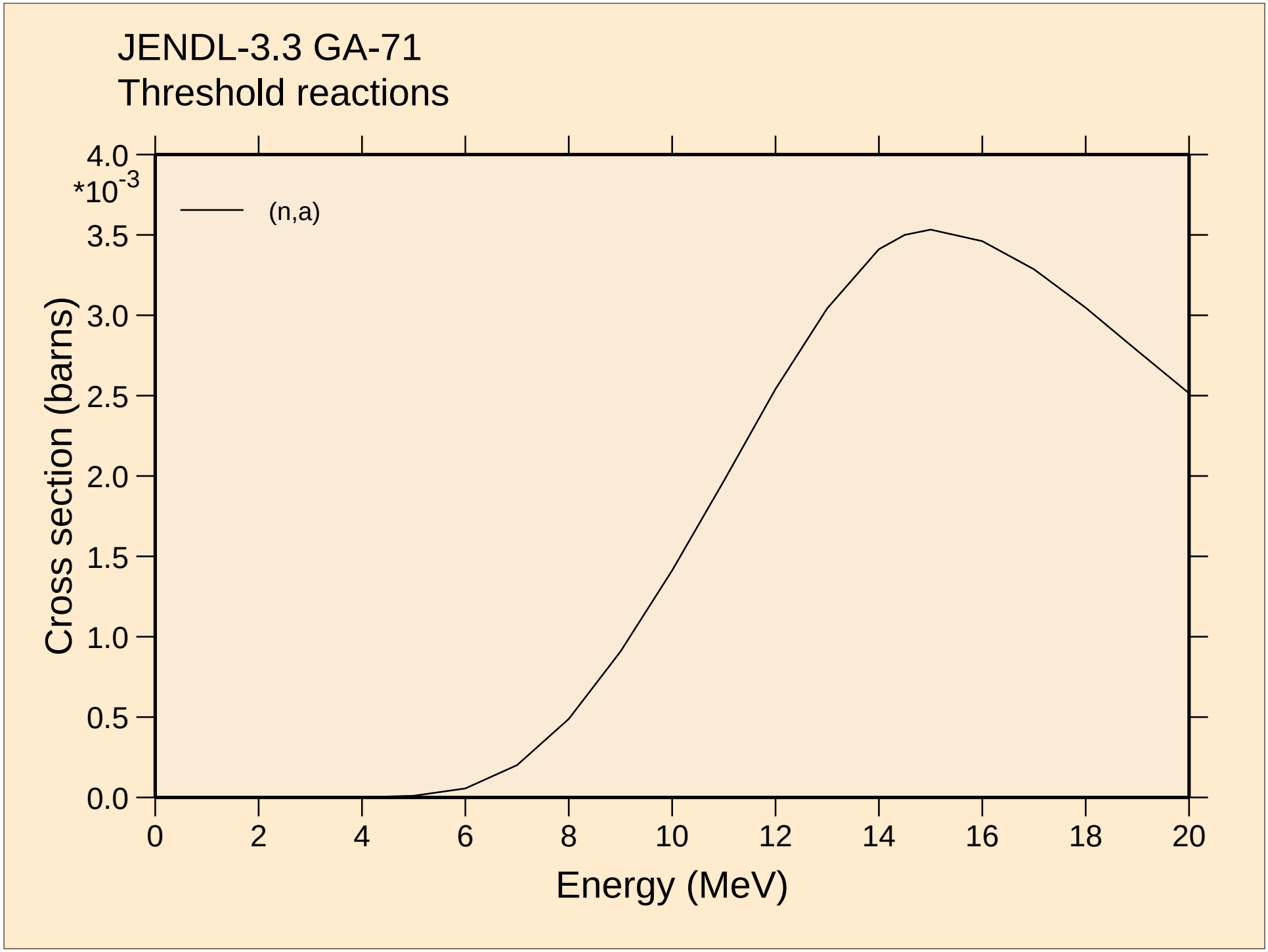
JENDL-3.3 GA-71
Threshold reactions
(n,a)
Cross section (barns)
*10-3
4.0
3.5
3.0
2.5
2.0
1.5
1.0
0.5
0.0
0
2
4
6
8
10
12
14
16
18
20
Energy (MeV)

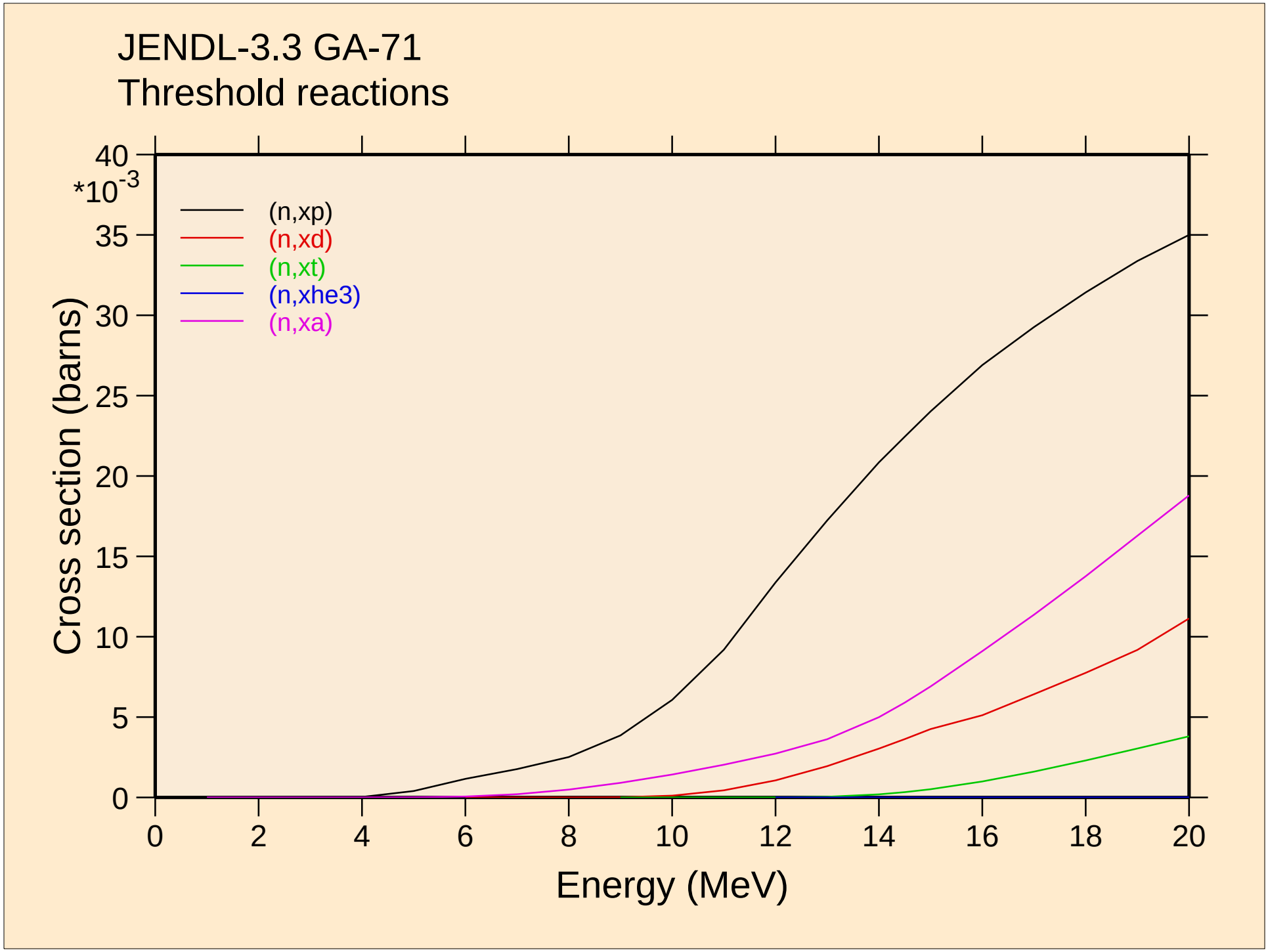
JENDL-3.3 GA-71
Threshold reactions
*10-3
(n,xp)
(n,xd)
(n,xt)
(n,xhe3)
(n,xa)
Cross section (barns)
Energy (MeV)
0
5
10
15
20
25
30
35
40
0
2
4
6
8
10
12
14
16
18
20

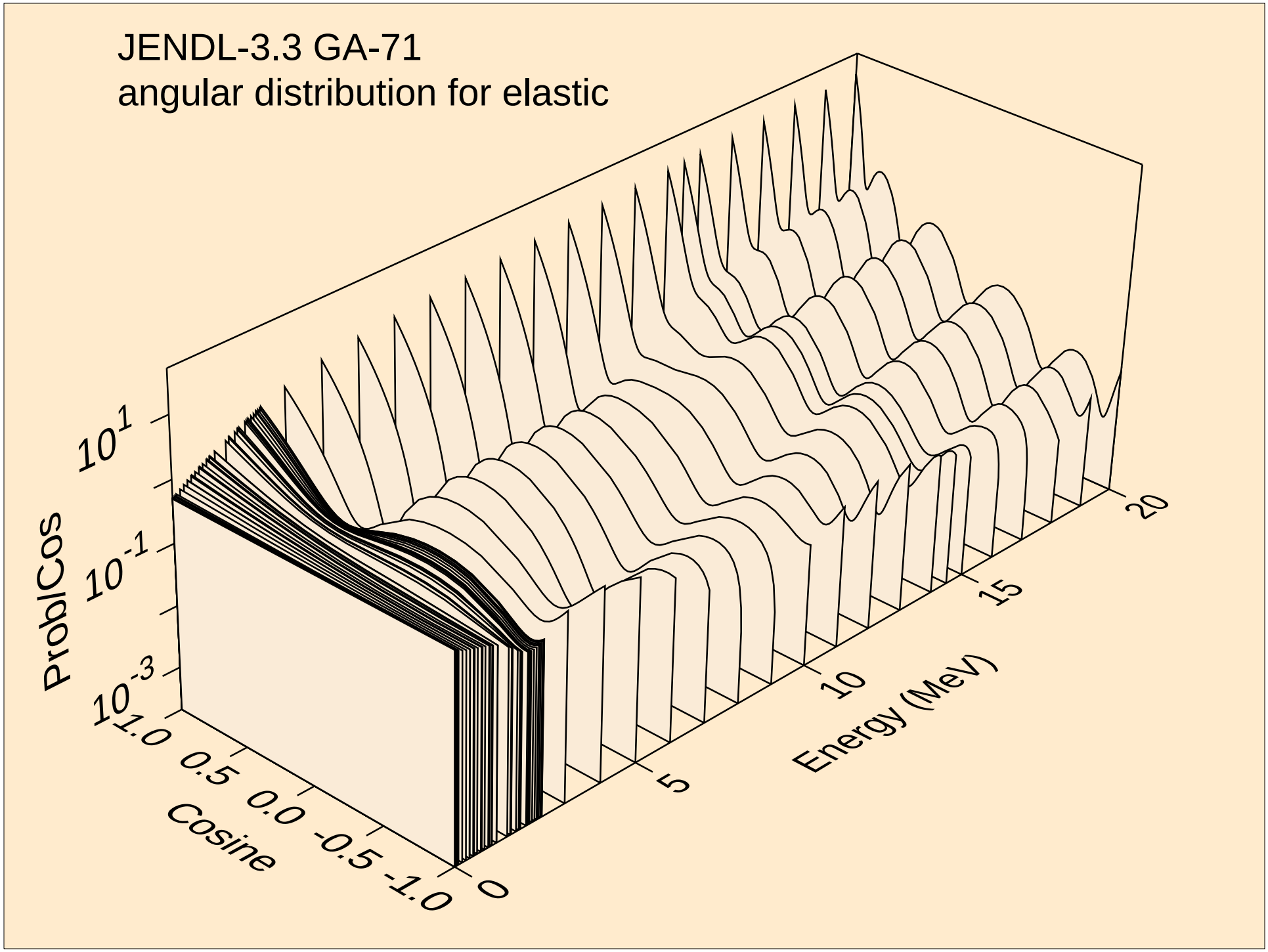
JENDL-3.3 GA-71
angular distribution for elastic
ProblCos
10^{1}
10^{-1}
10^{-3}
1.0
0.5
0.0
-0.5
-1.0
Cosine
0
5
10
15
20
Energy (MeV)

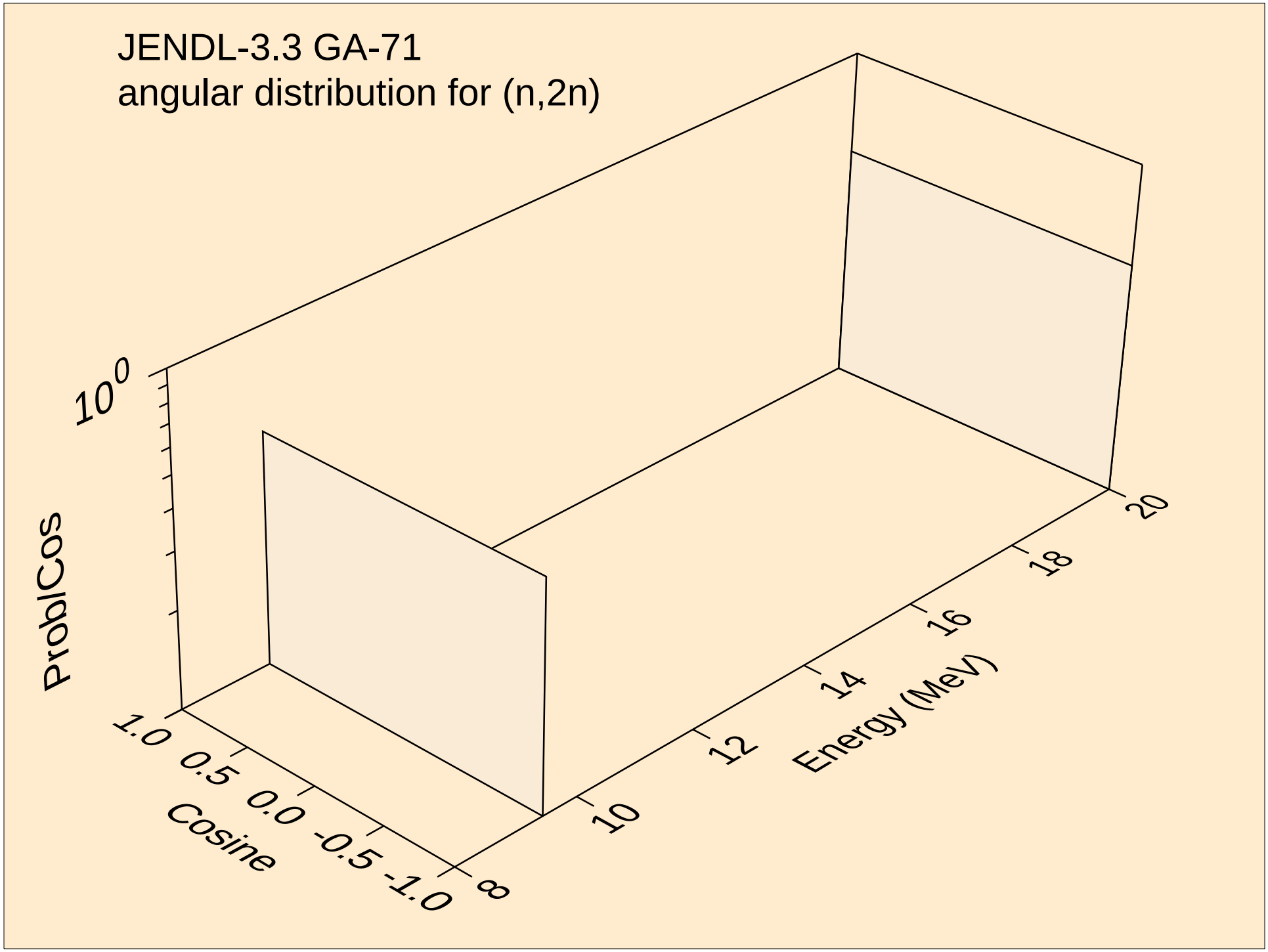
JENDL-3.3 GA-71
angular distribution for (n,2n)
10^0
ProblCos
1.0
0.5
0.0
-0.5
-1.0
Cosine
8
10
12
14
16
18
20
Energy (MeV)

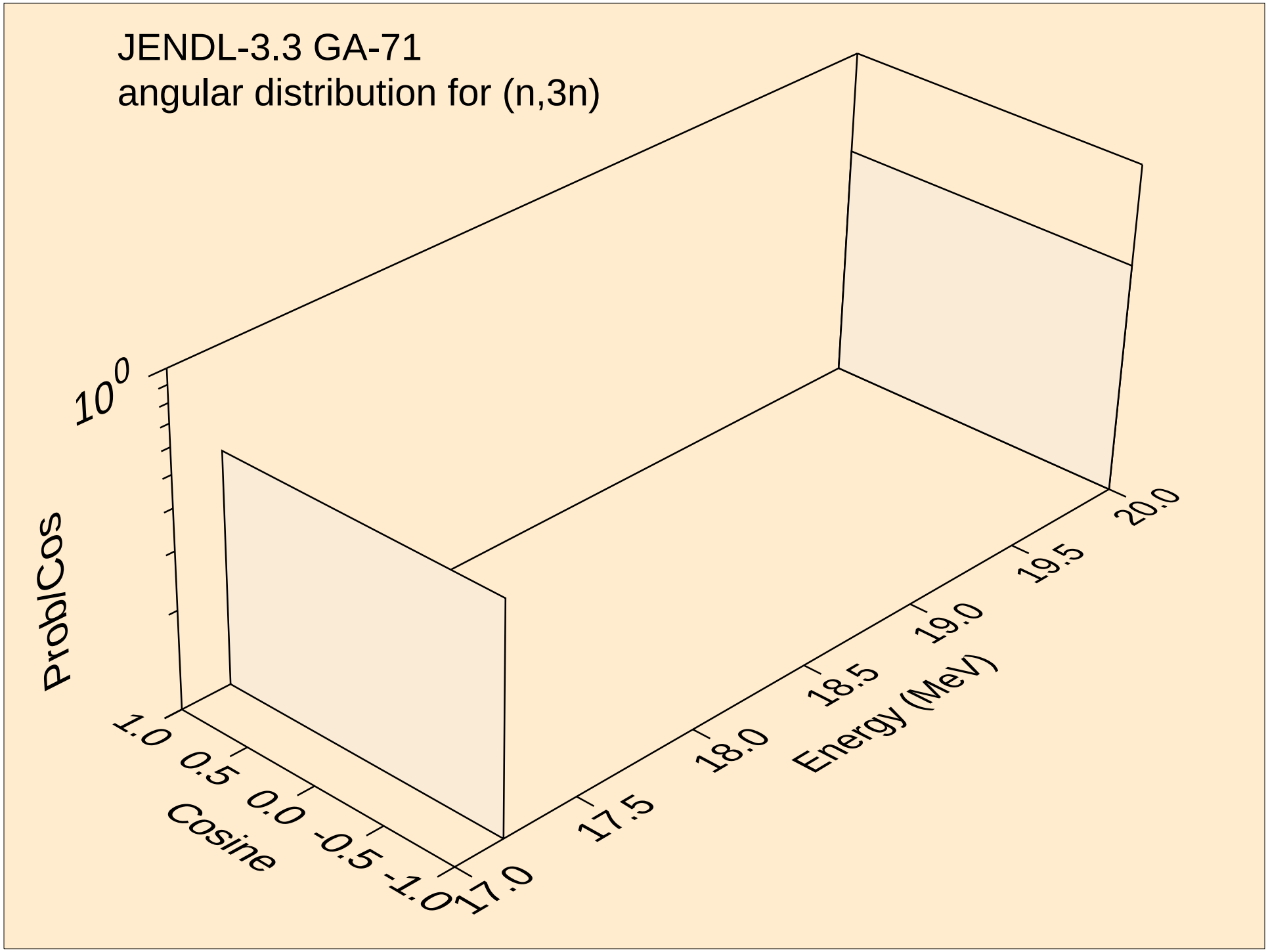
JENDL-3.3 GA-71
angular distribution for (n,3n)
10^0
ProblCos
1.0
0.5
0.0
-0.5
-1.0
Cosine
17.0
17.5
18.0
18.5
19.0
19.5
20.0
Energy (MeV)

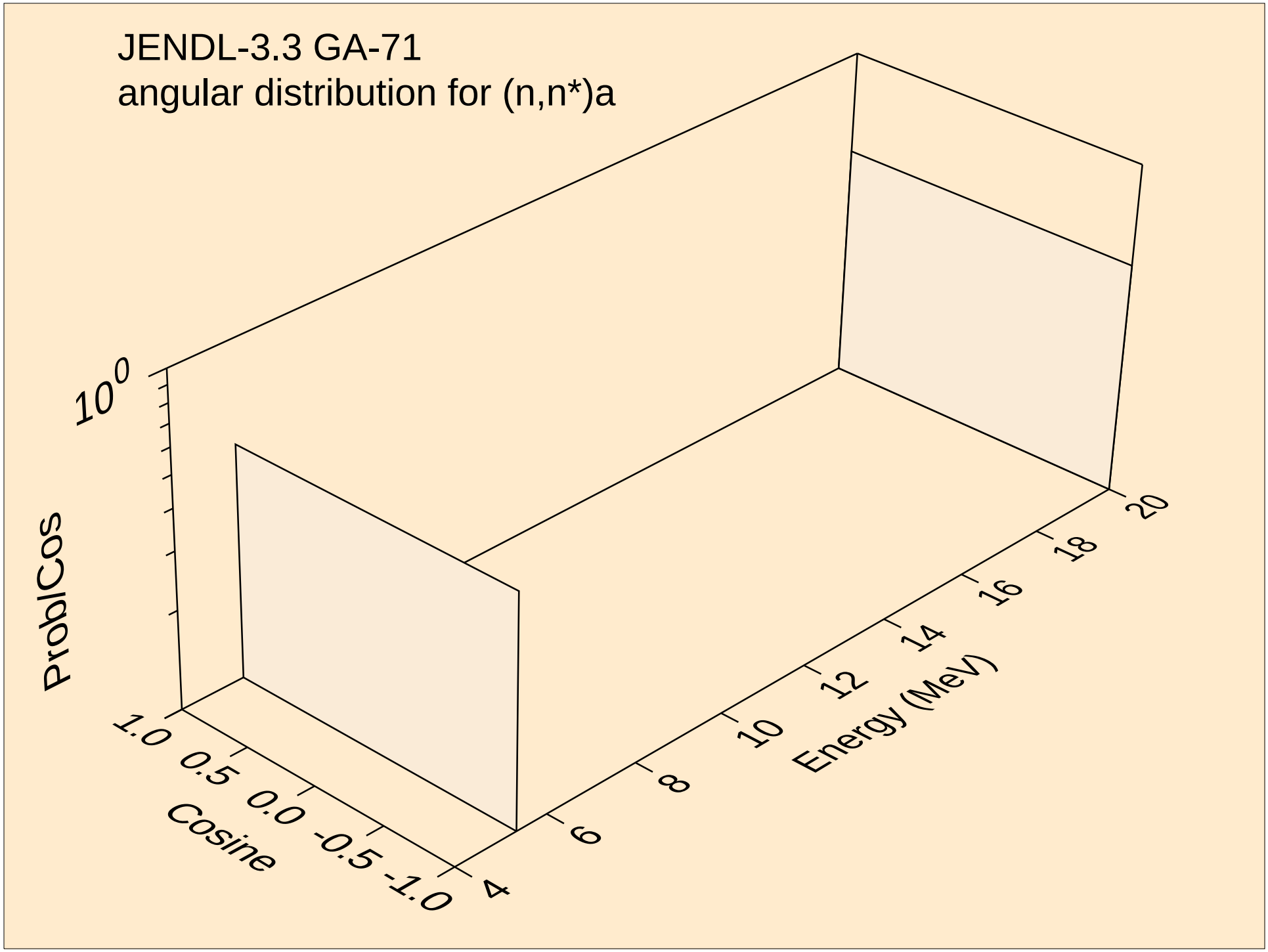
JENDL-3.3 GA-71
angular distribution for (n,n*)a
10^0
ProbCos
1.0
0.5
0.0
-0.5
-1.0
Cosine
4
6
8
10
12
14
16
18
20
Energy (MeV)

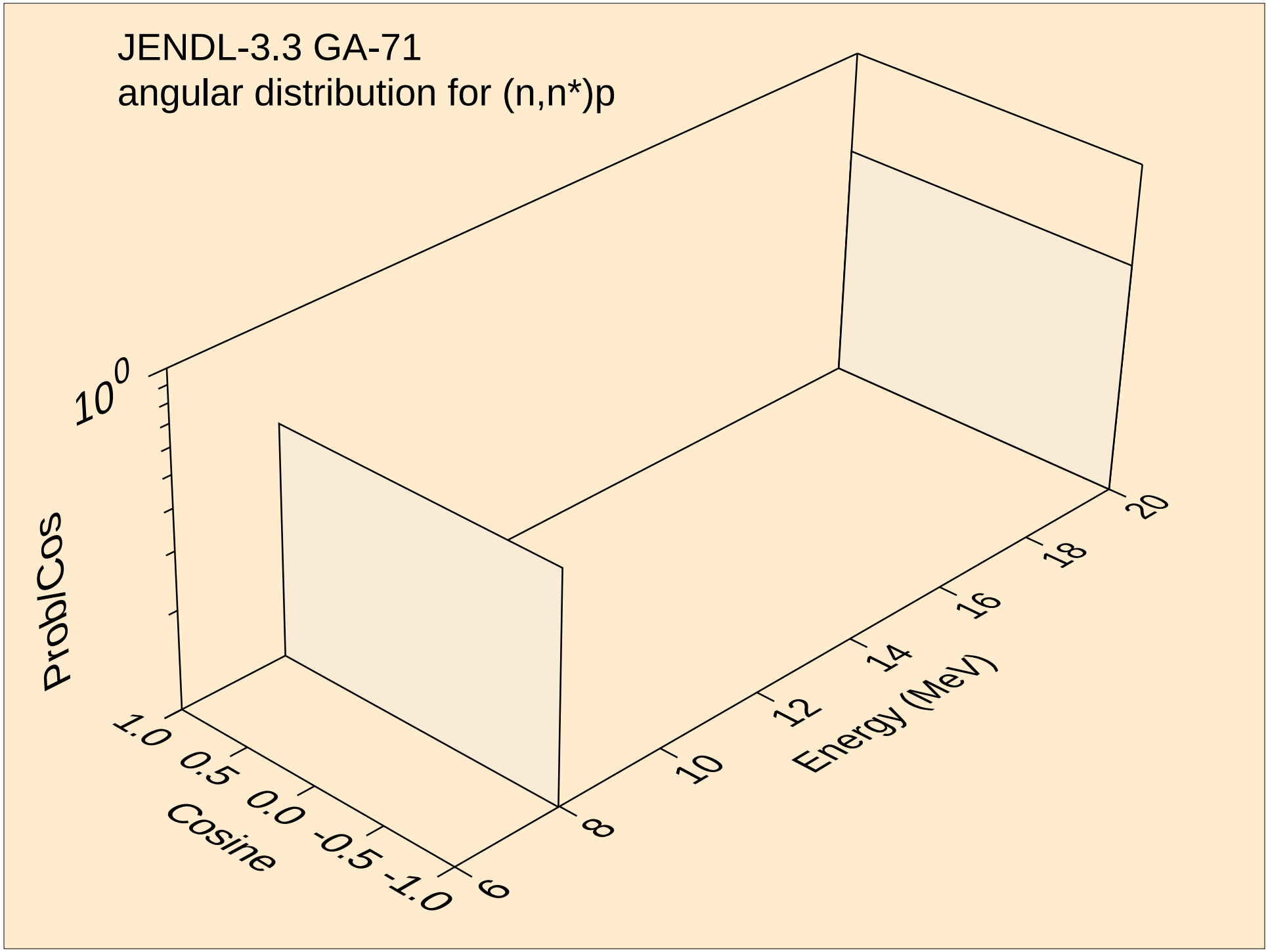
JENDL-3.3 GA-71
angular distribution for (n,n*)p
10^0
ProblCos
1.0
0.5
0.0
-0.5
-1.0
Cosine
6
8
10
12
14
16
18
20
Energy (MeV)

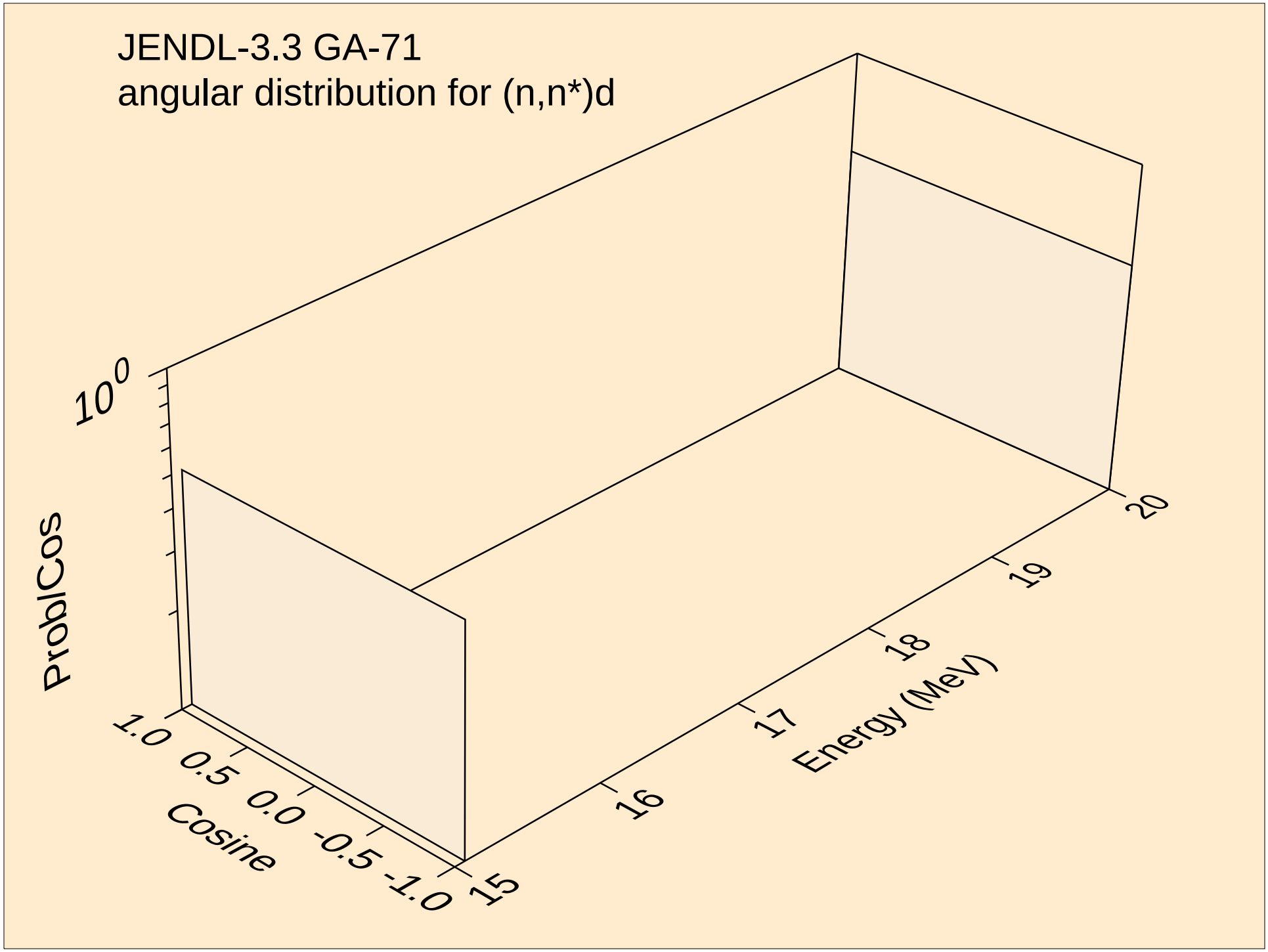
JENDL-3.3 GA-71
angular distribution for (n,n*)d
10^0
ProblCos
1.0
0.5
0.0
-0.5
-1.0
Cosine
15
16
17
18
19
20
Energy (MeV)

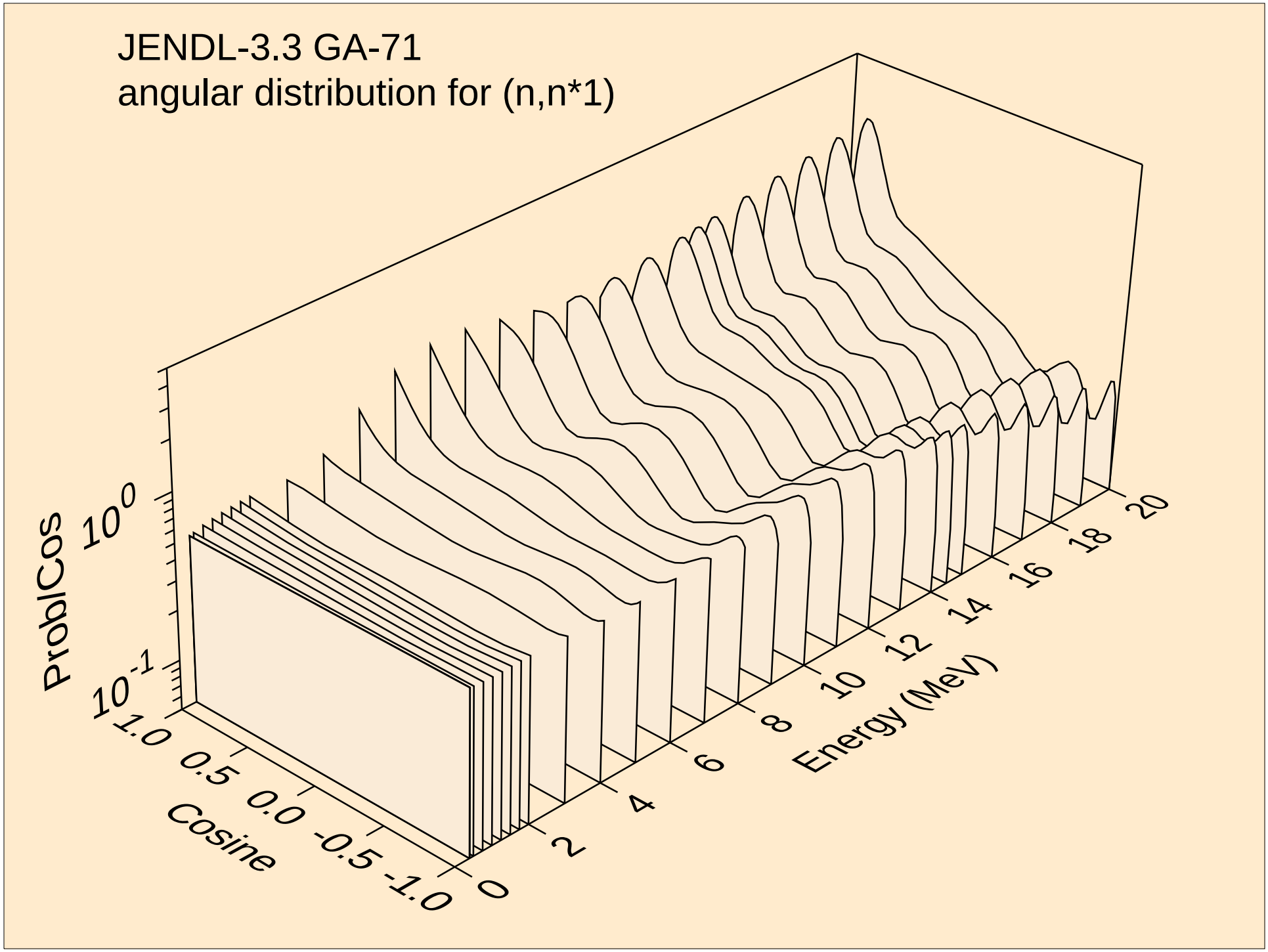
JENDL-3.3 GA-71
angular distribution for (n,n*1)
ProbCos
10^0
10^{-1}
1.0
0.5
0.0
-0.5
-1.0
Cosine
0
2
4
6
8
10
12
14
16
18
20
Energy (MeV)

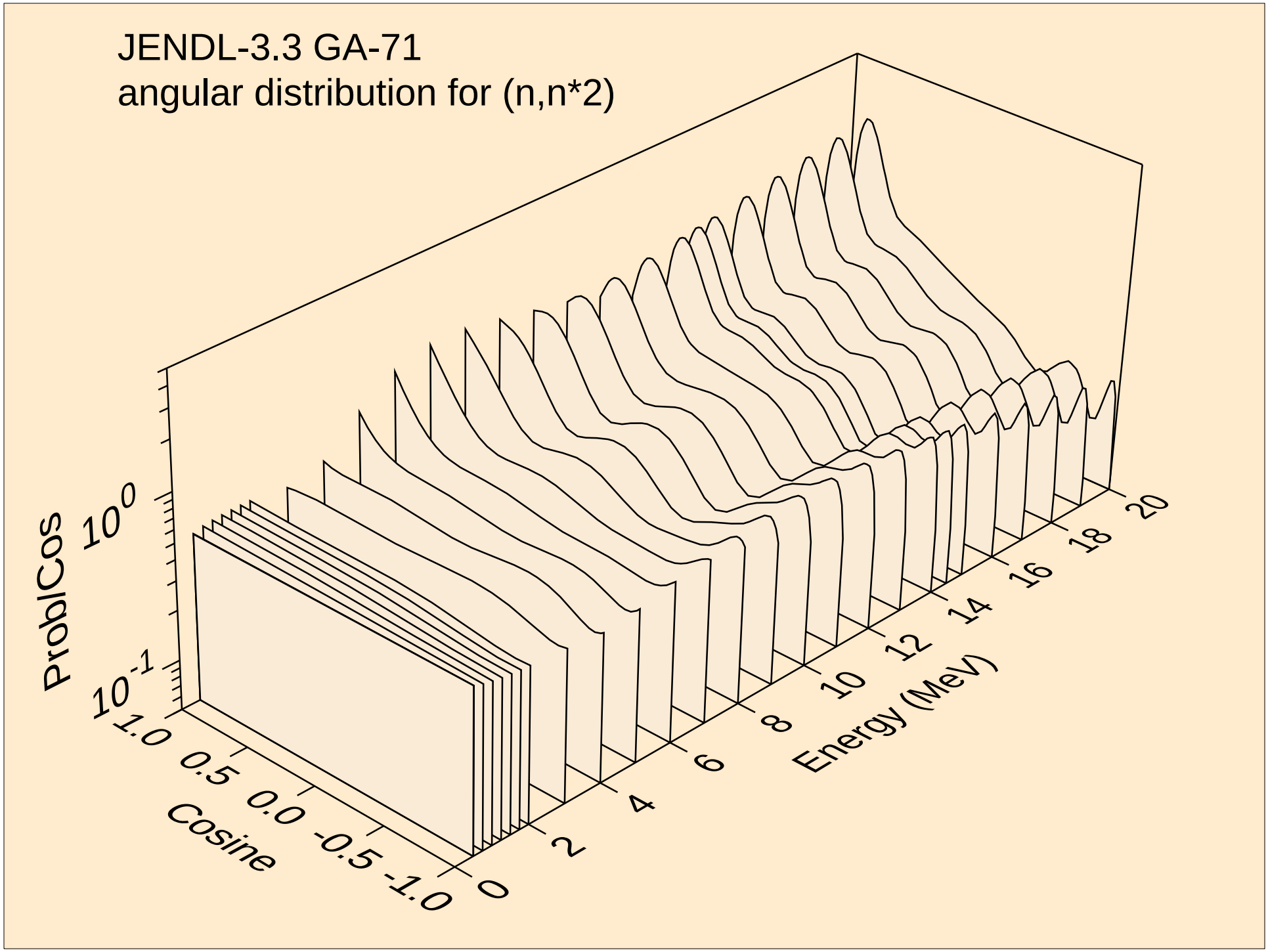
JENDL-3.3 GA-71
angular distribution for (n,n*2)
ProbCos
10^{0}
10^{-1}
1.0
0.5
0.0
-0.5
-1.0
Cosine
0
2
4
6
8
10
12
14
16
18
20
Energy (MeV)

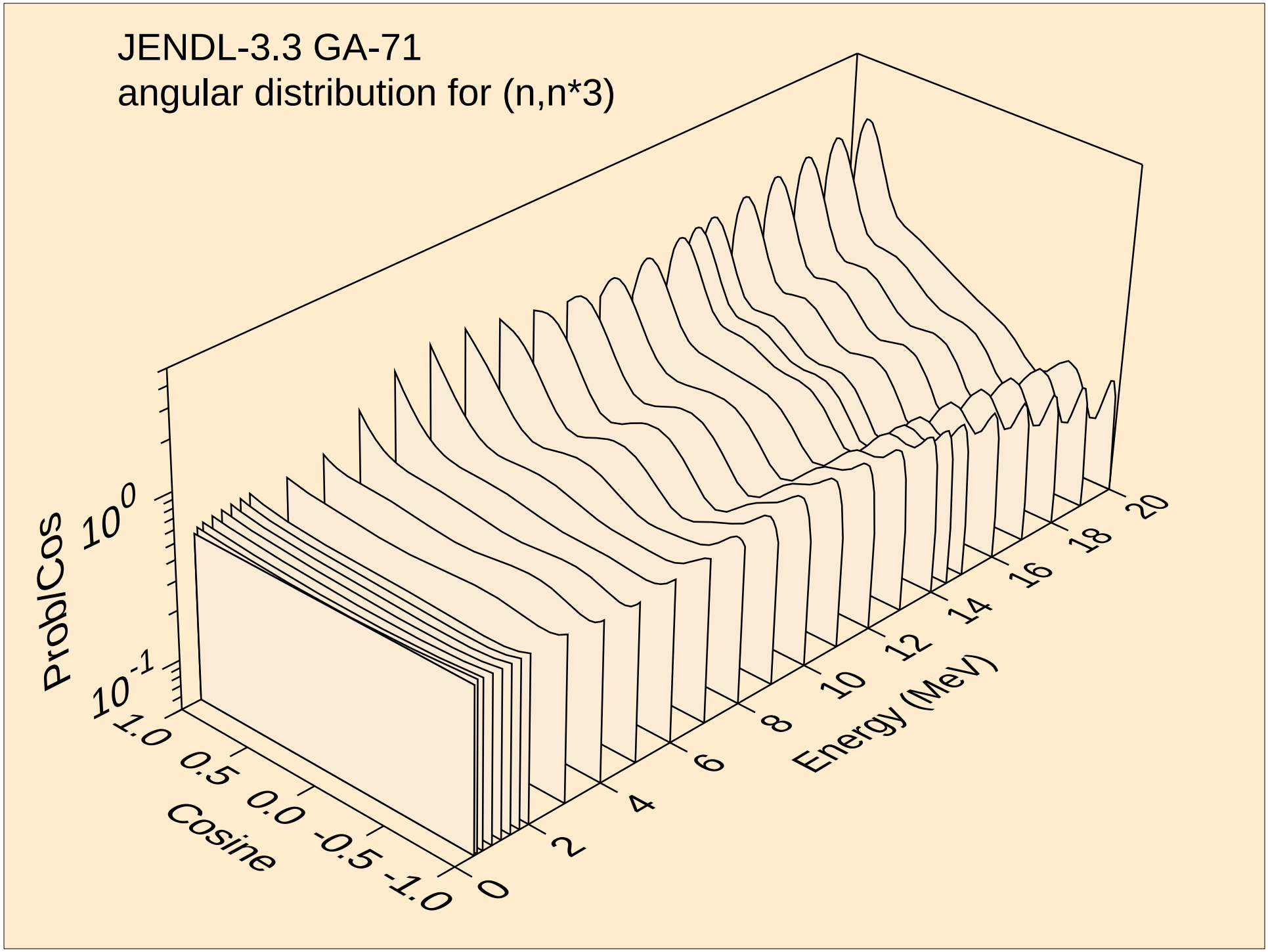
JENDL-3.3 GA-71
angular distribution for (n,n*3)
ProblCos
10^0
10^{-1}
1.0
0.5
0.0
-0.5
-1.0
Cosine
0
2
4
6
8
10
12
14
16
18
20
Energy (MeV)

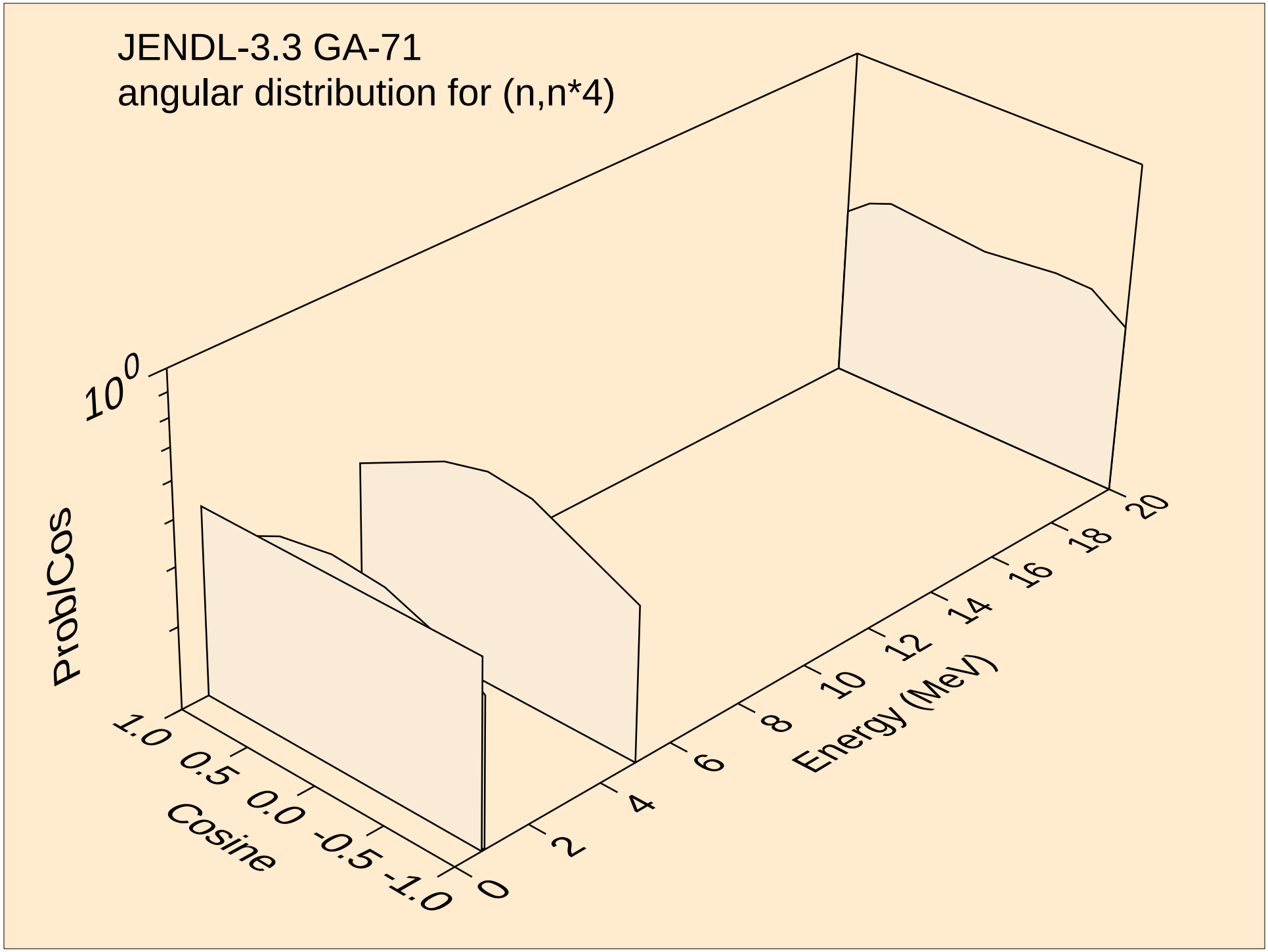
JENDL-3.3 GA-71
angular distribution for (n,n*4)
10^0
ProbCos
1.0
0.5
0.0
-0.5
-1.0
Cosine
0
2
4
6
8
10
12
14
16
18
20
Energy (MeV)

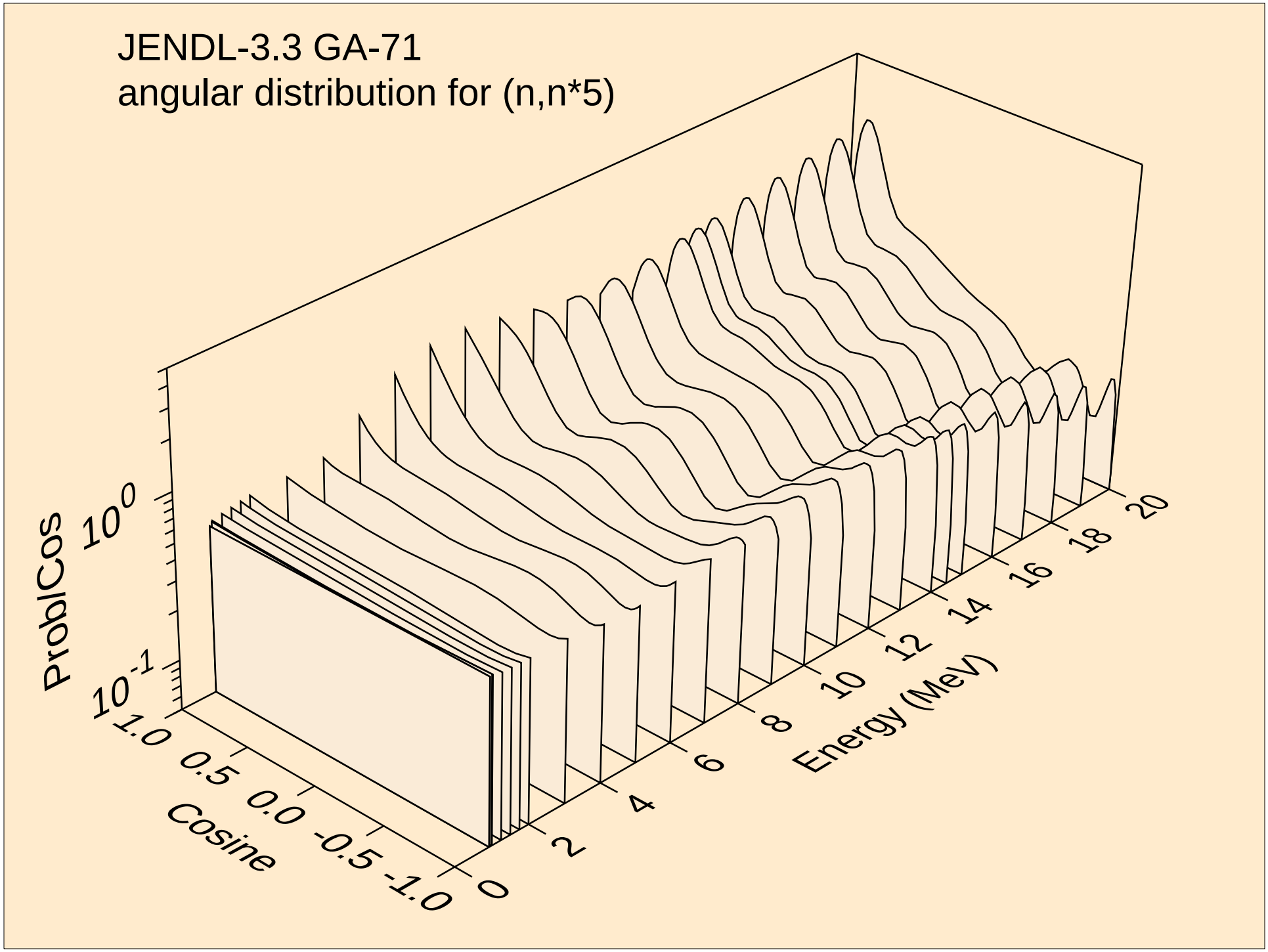
JENDL-3.3 GA-71
angular distribution for (n,n*5)
ProbCos
10^{0}
10^{-1}
1.0
0.5
0.0
-0.5
-1.0
Cosine
0
2
4
6
8
10
12
14
16
18
20
Energy (MeV)

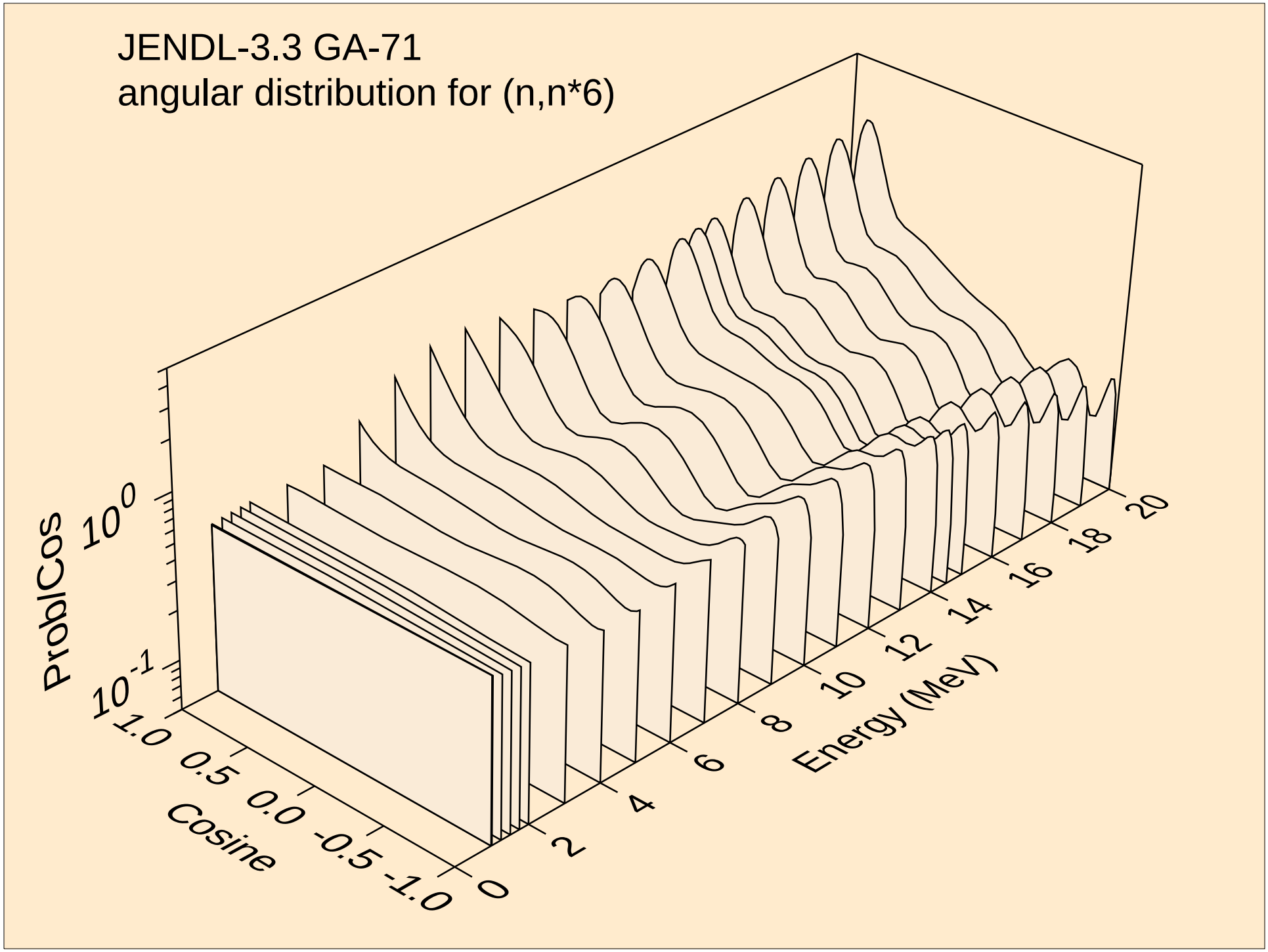
JENDL-3.3 GA-71
angular distribution for (n,n*6)
ProbCos
10^{0}
10^{-1}
1.0
0.5
0.0
-0.5
-1.0
Cosine
0
2
4
6
8
10
12
14
16
18
20
Energy (MeV)

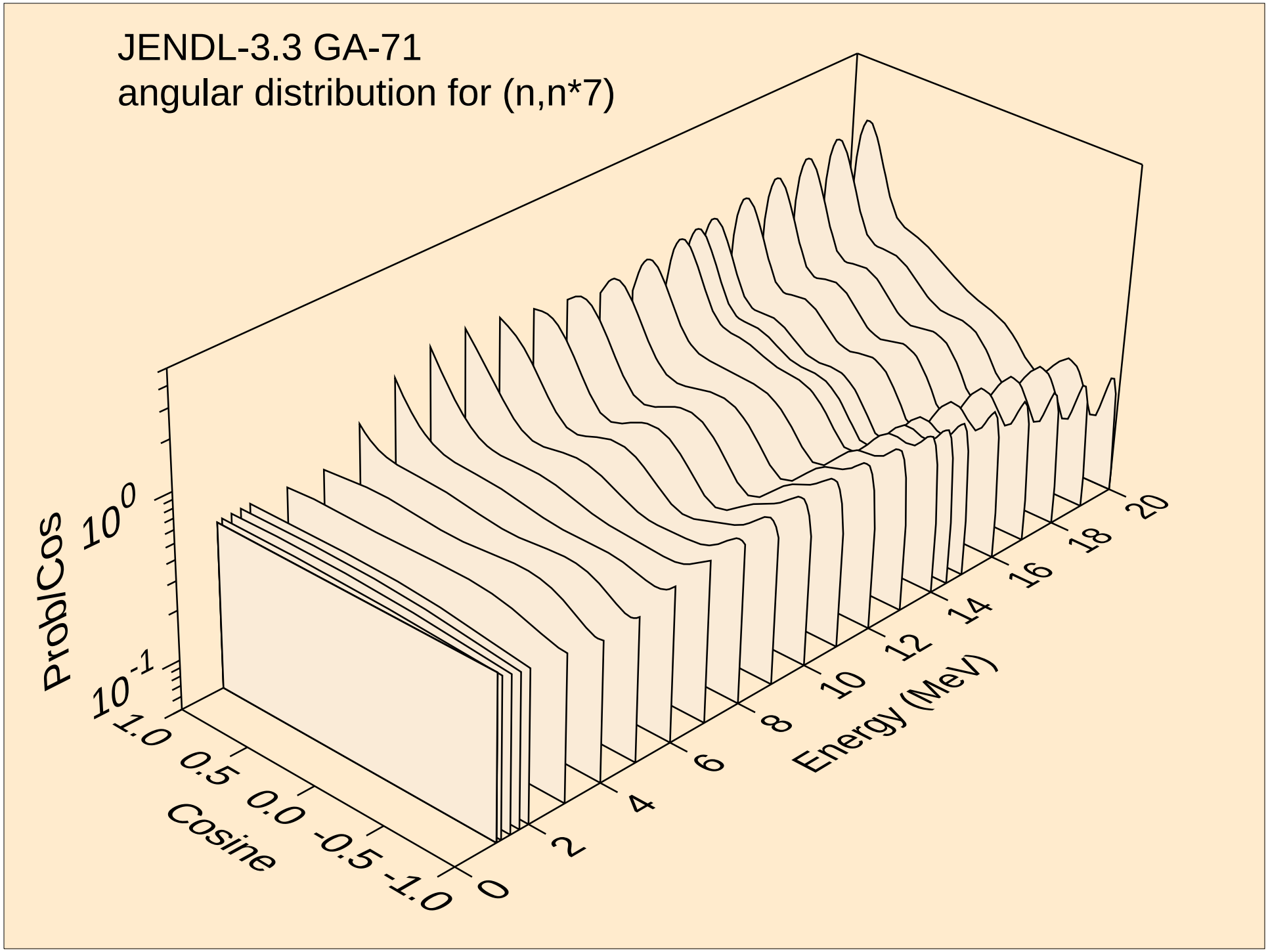
JENDL-3.3 GA-71
angular distribution for (n,n*7)
ProbCos
10^0
10^{-1}
1.0
0.5
0.0
-0.5
-1.0
Cosine
0
2
4
6
8
10
12
14
16
18
20
Energy (MeV)

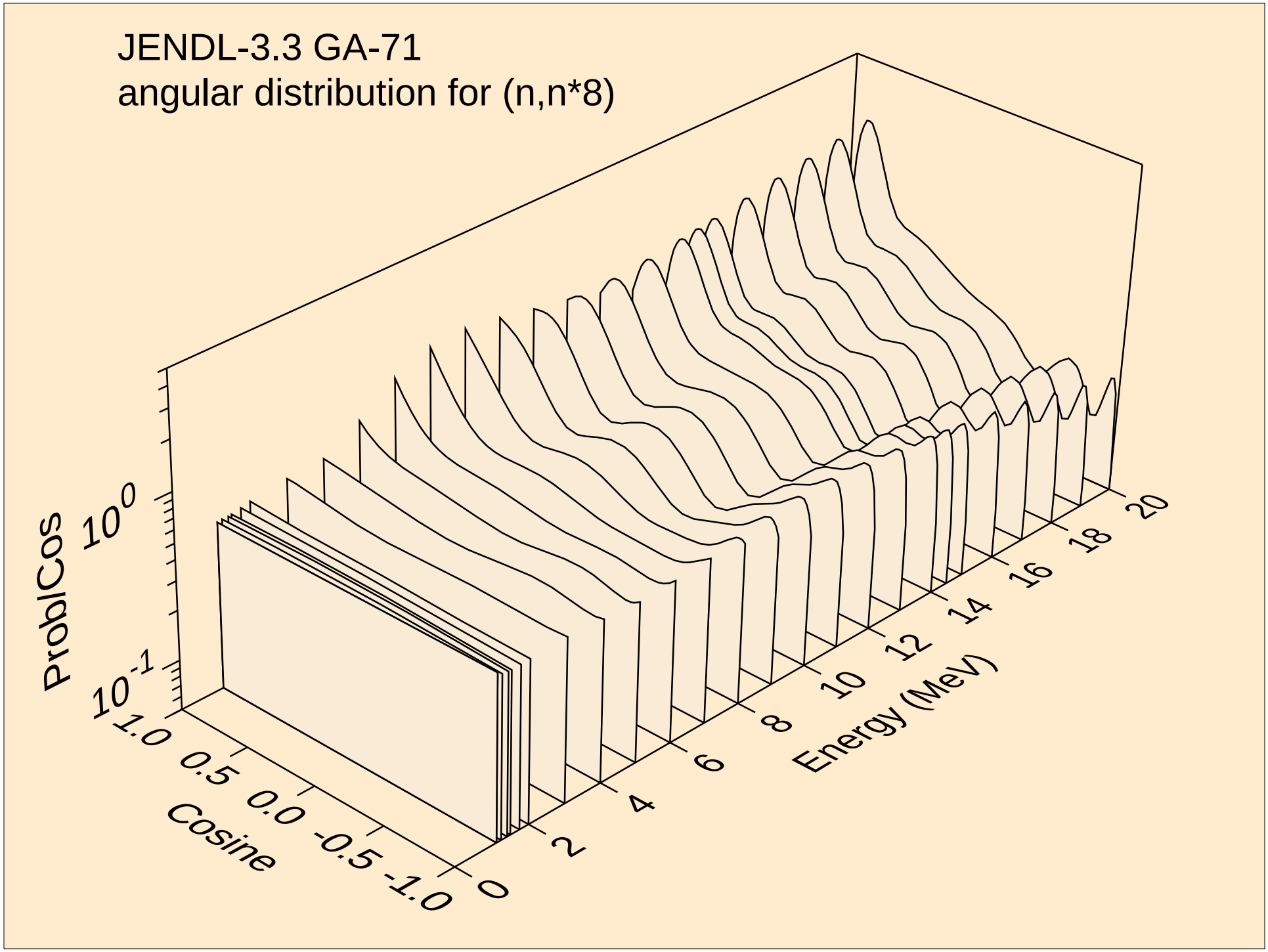
JENDL-3.3 GA-71
angular distribution for (n,n*8)
ProbCos
10^{0}
10^{-1}
1.0
0.5
0.0
-0.5
-1.0
Cosine
0
2
4
6
8
10
12
14
16
18
20
Energy (MeV)

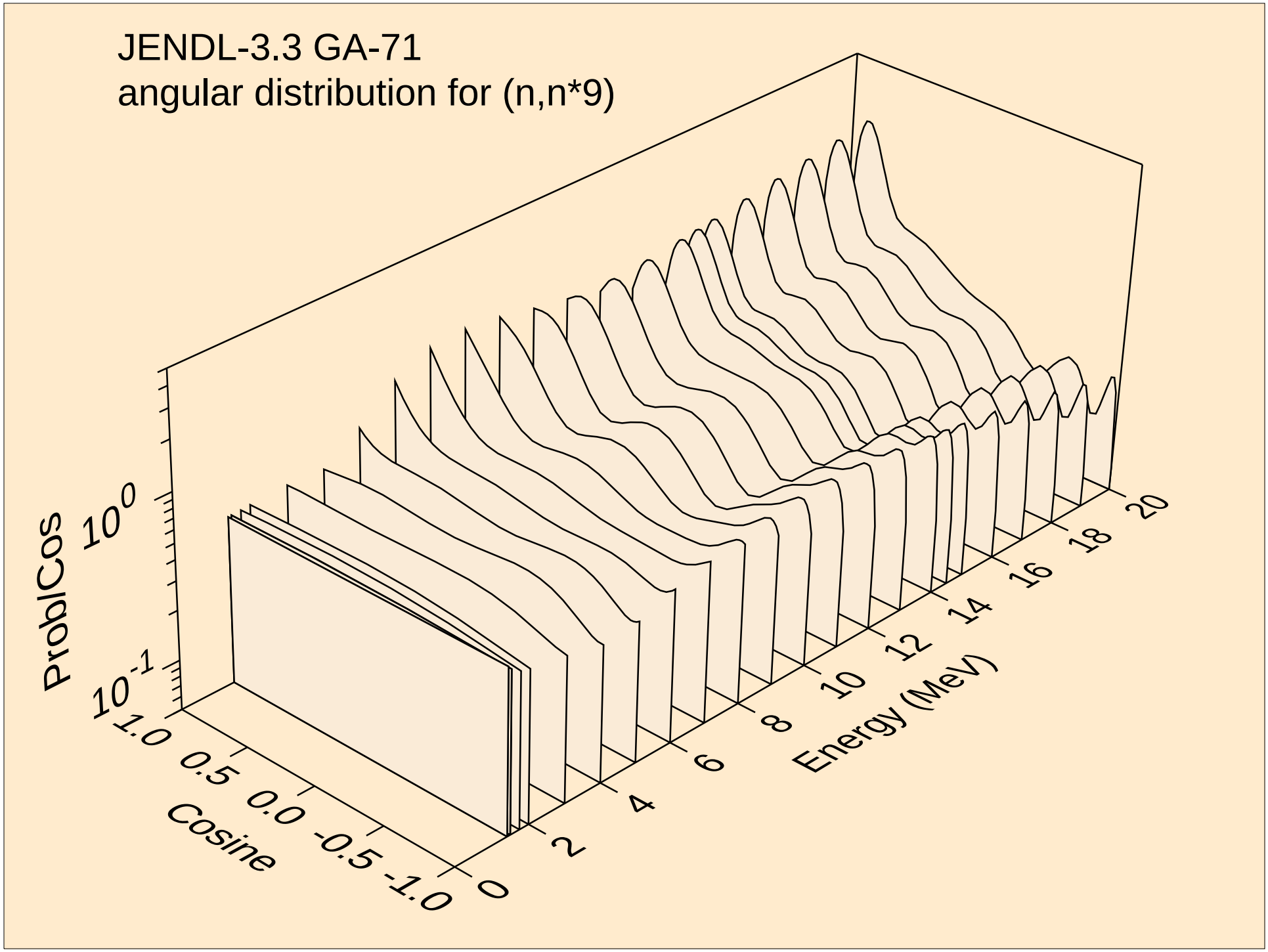
JENDL-3.3 GA-71
angular distribution for (n,n*9)
ProbCos
10^{0}
10^{-1}
1.0
0.5
0.0
-0.5
-1.0
Cosine
0
2
4
6
8
10
12
14
16
18
20
Energy (MeV)

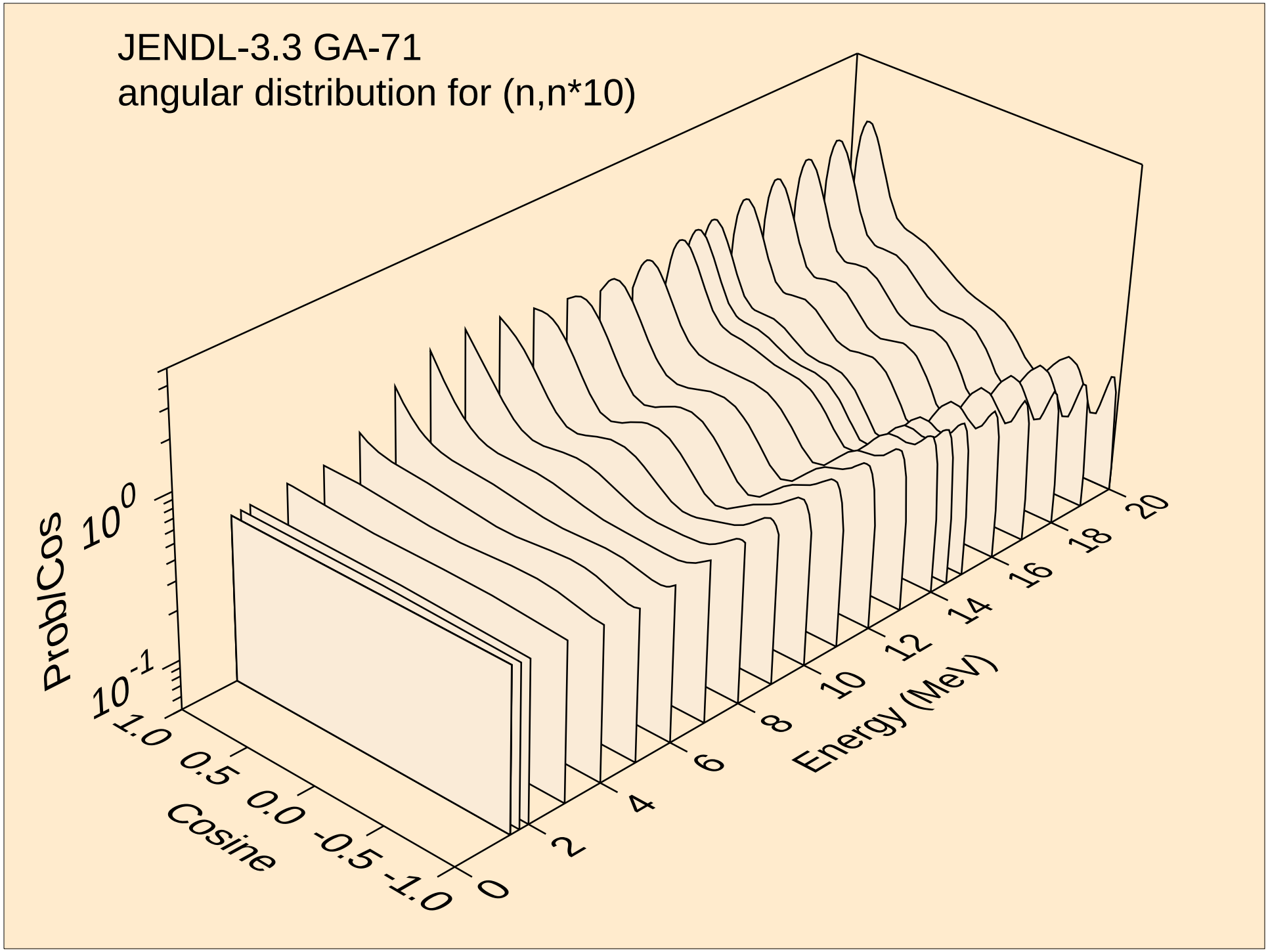
JENDL-3.3 GA-71
angular distribution for (n,n*10)
Prob/Cos
10^0
10^{-1}
1.0
0.5
0.0
-0.5
-1.0
Cosine
0
2
4
6
8
10
12
14
16
18
20
Energy (MeV)

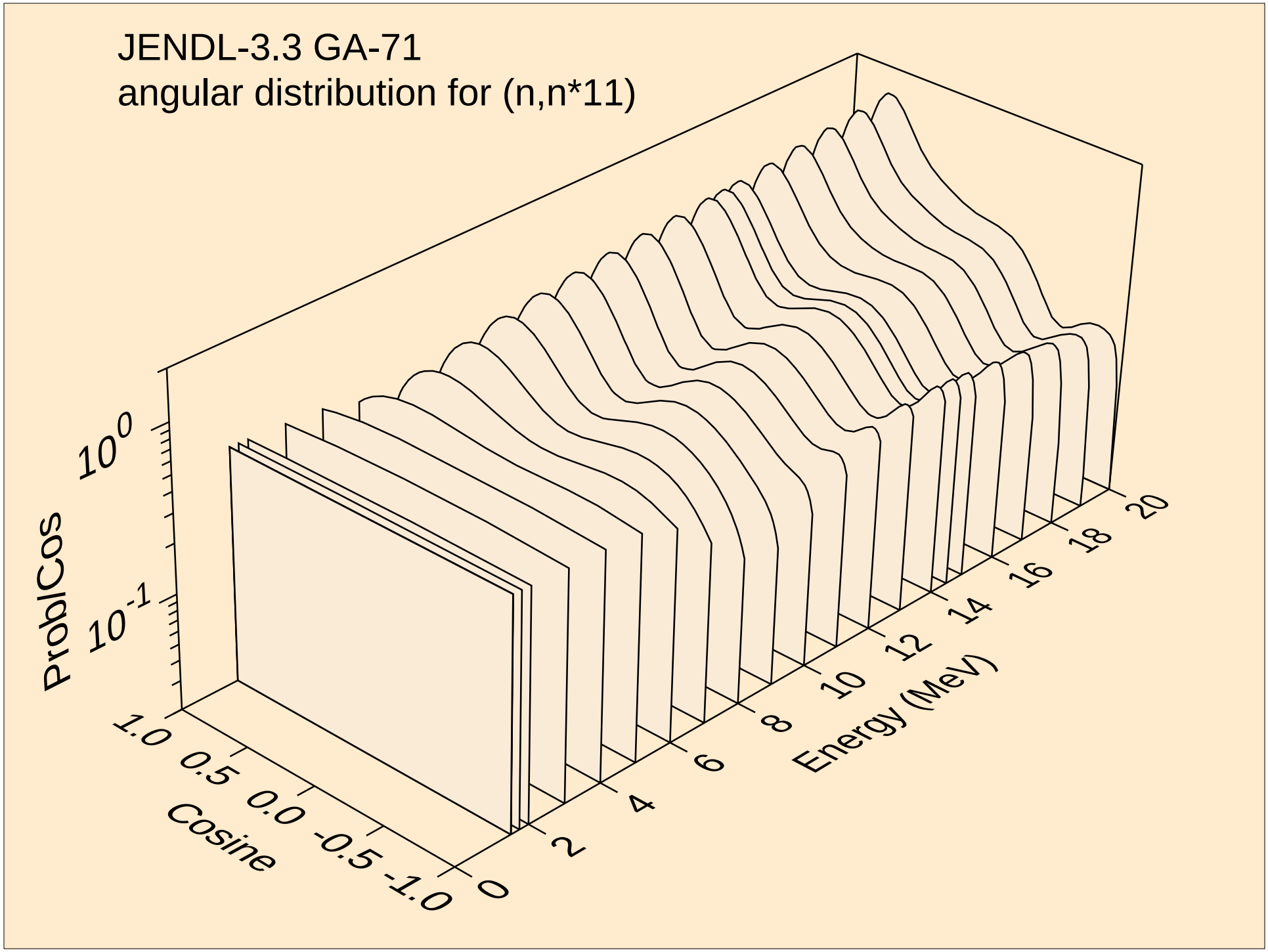
JENDL-3.3 GA-71
angular distribution for (n,n*11)
ProbCos
10^0
10^{-1}
Cosine
1.0
0.5
0.0
-0.5
-1.0
Energy (MeV)
0
2
4
6
8
10
12
14
16
18
20

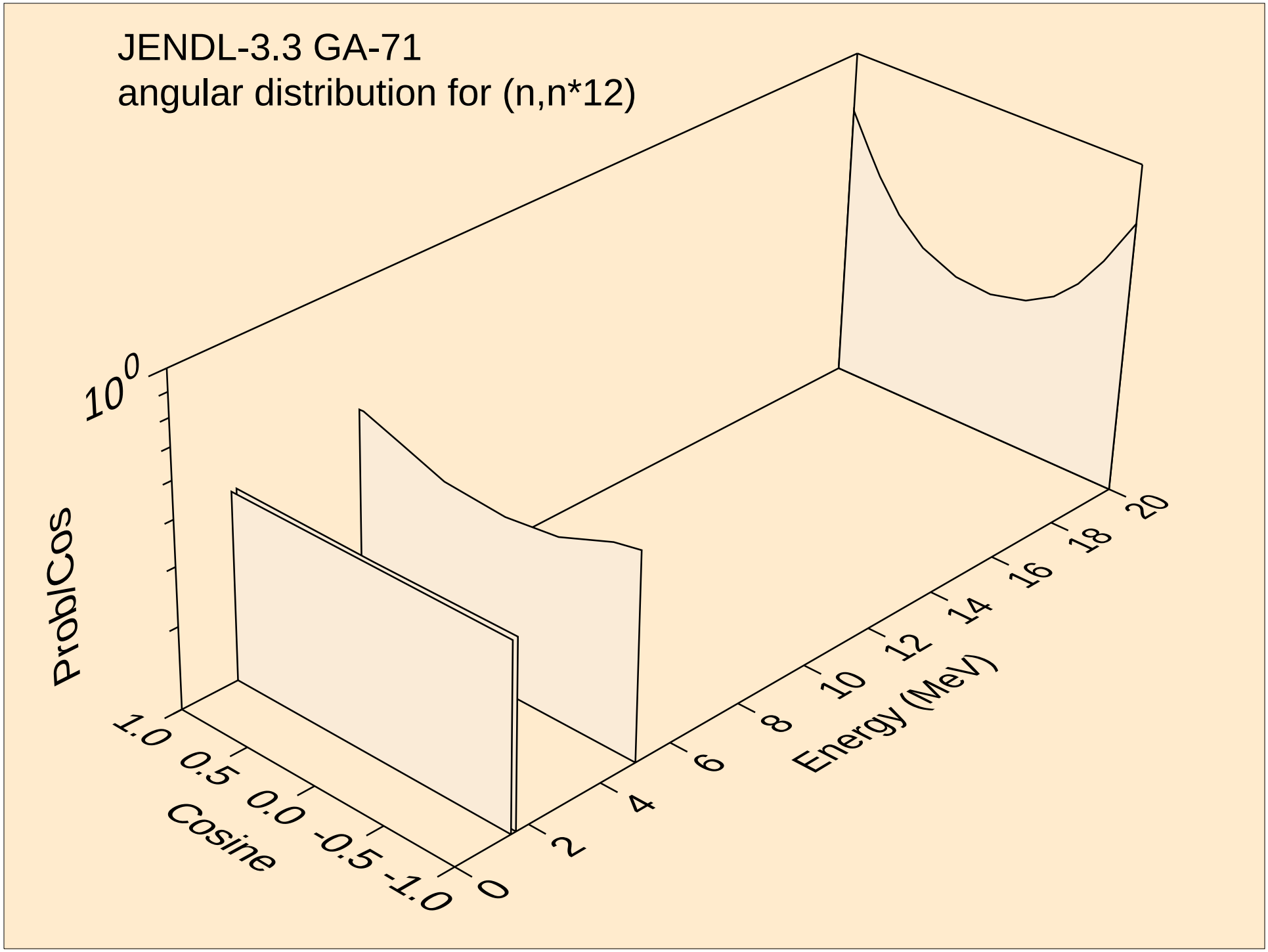
JENDL-3.3 GA-71
angular distribution for (n,n*12)
10^0
ProbCos
1.0
0.5
0.0
-0.5
-1.0
Cosine
0
2
4
6
8
10
12
14
16
18
20
Energy (MeV)

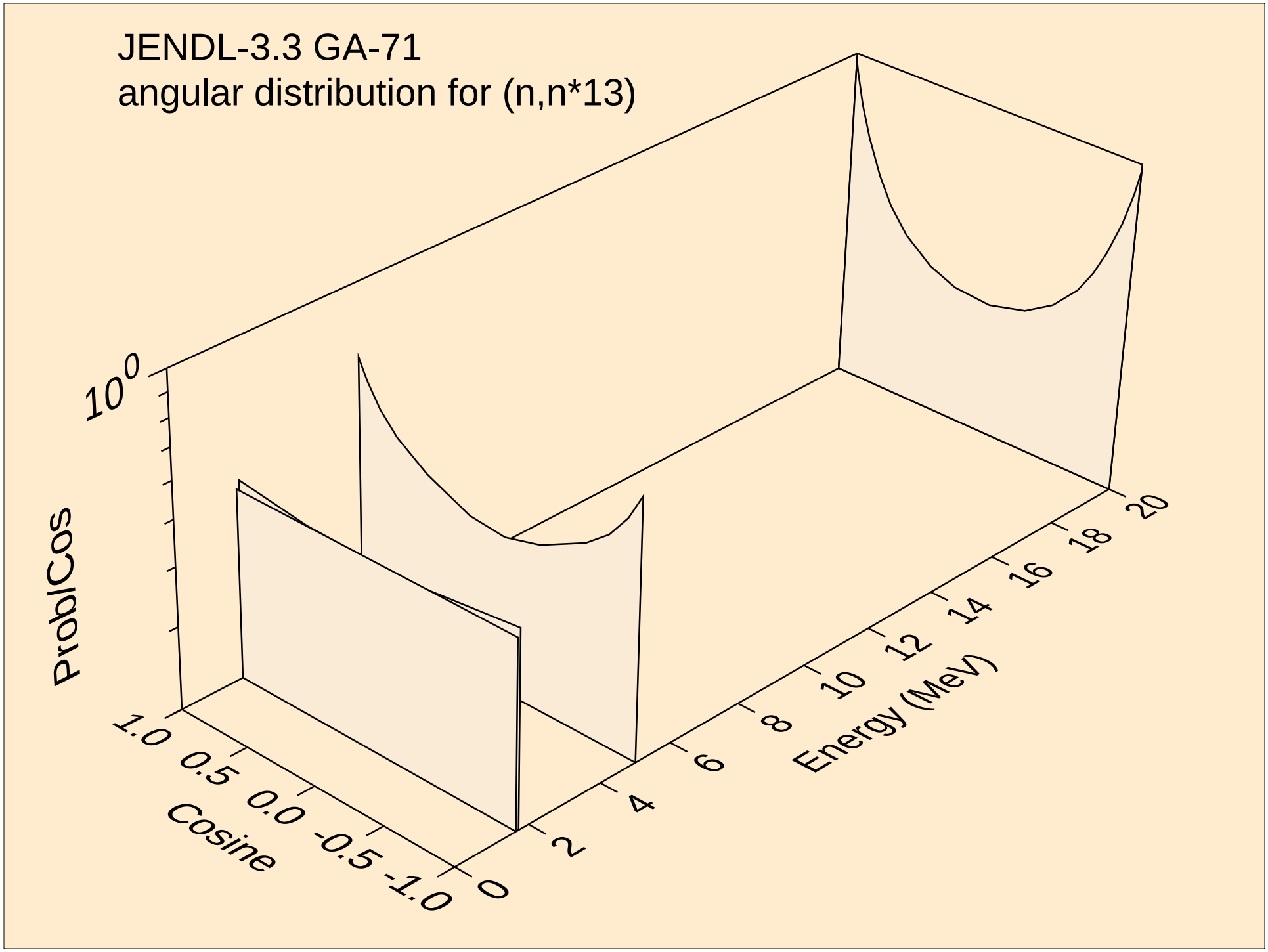
JENDL-3.3 GA-71
angular distribution for (n,n*13)
10^0
ProbCos
1.0
0.5
0.0
-0.5
-1.0
Cosine
0
2
4
6
8
10
12
14
16
18
20
Energy (MeV)

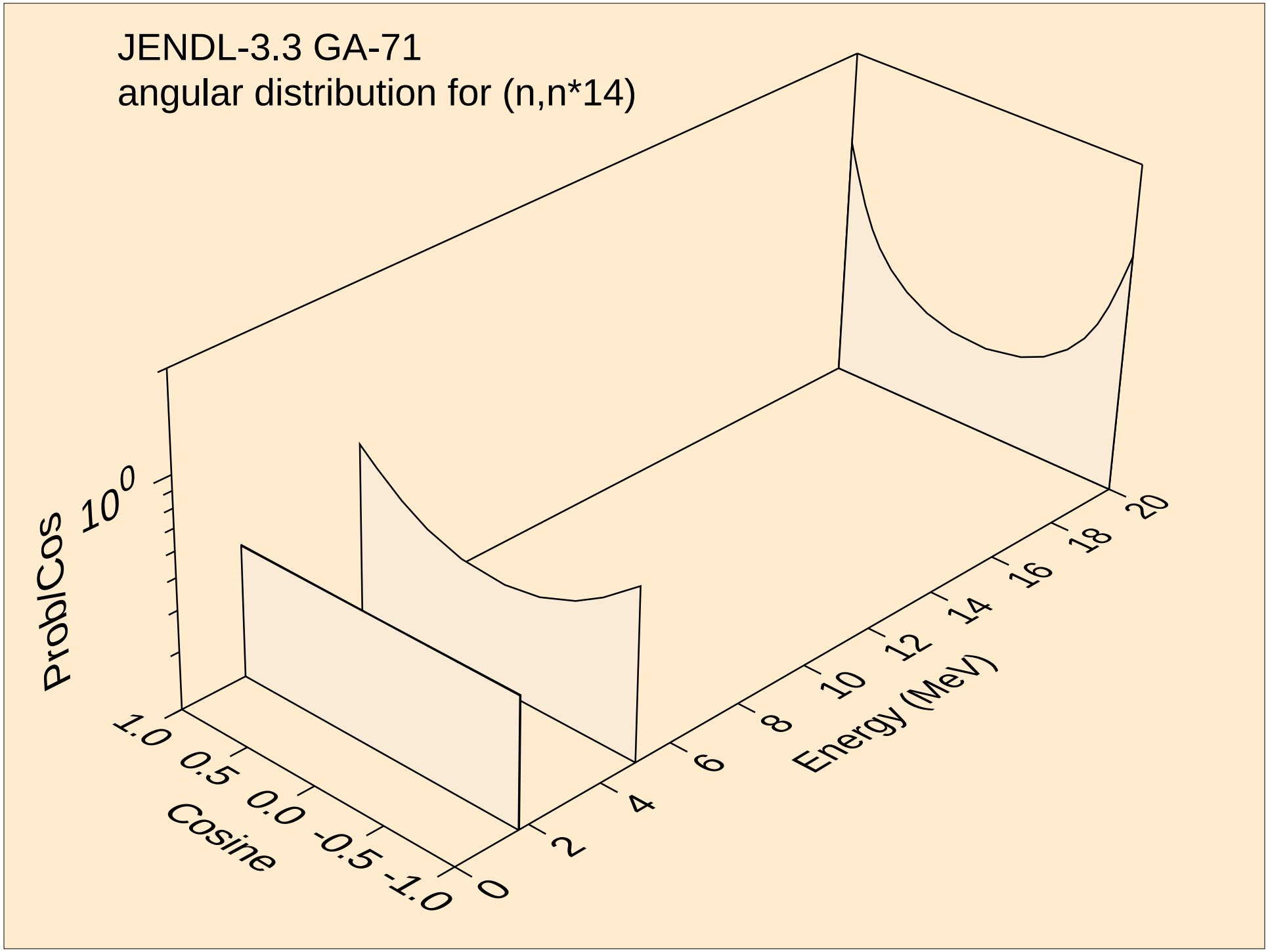
JENDL-3.3 GA-71
angular distribution for (n,n*14)
ProblCos
10^0
1.0
0.5
0.0
-0.5
-1.0
Cosine
0
2
4
6
8
10
12
14
16
18
20
Energy (MeV)

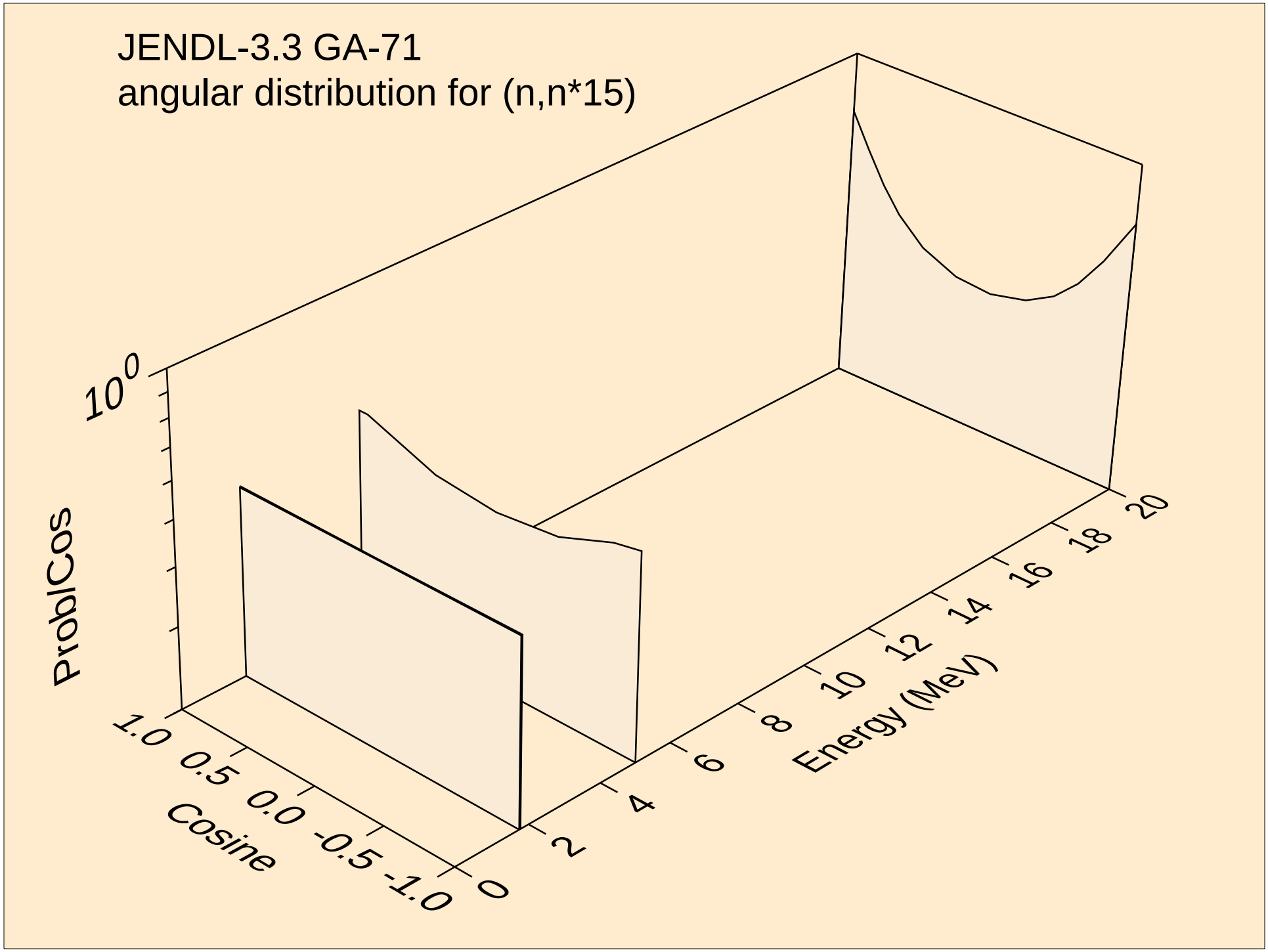
JENDL-3.3 GA-71
angular distribution for (n,n*15)
10^0
ProbCos
1.0
0.5
0.0
-0.5
-1.0
Cosine
0
2
4
6
8
10
12
14
16
18
20
Energy (MeV)

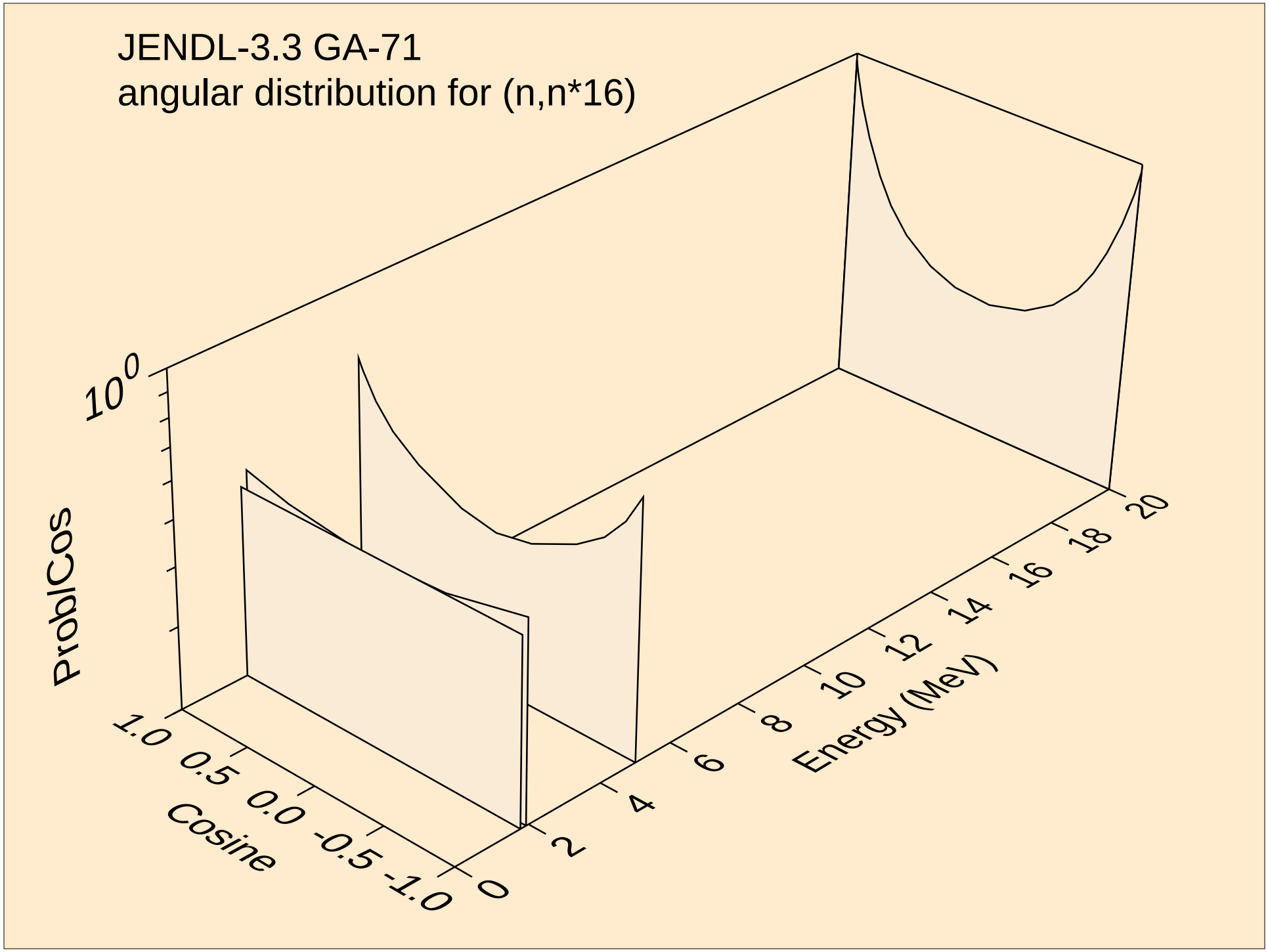
JENDL-3.3 GA-71
angular distribution for (n,n*16)
10^0
ProbCos
1.0
0.5
0.0
-0.5
-1.0
Cosine
0
2
4
6
8
10
12
14
16
18
20
Energy (MeV)

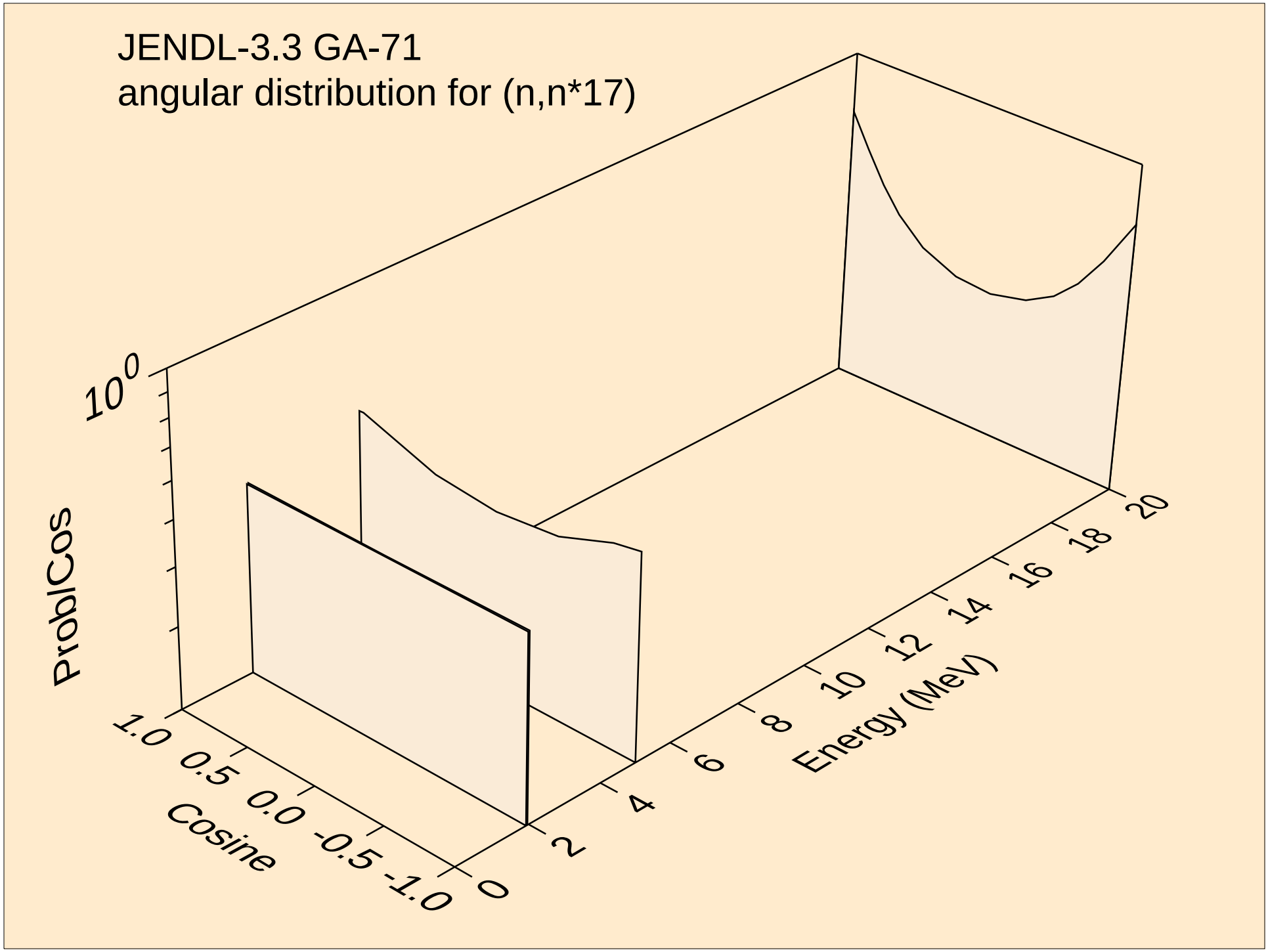
JENDL-3.3 GA-71
angular distribution for (n,n*17)
10^0
ProbCos
1.0
0.5
0.0
-0.5
-1.0
Cosine
0
2
4
6
8
10
12
14
16
18
20
Energy (MeV)

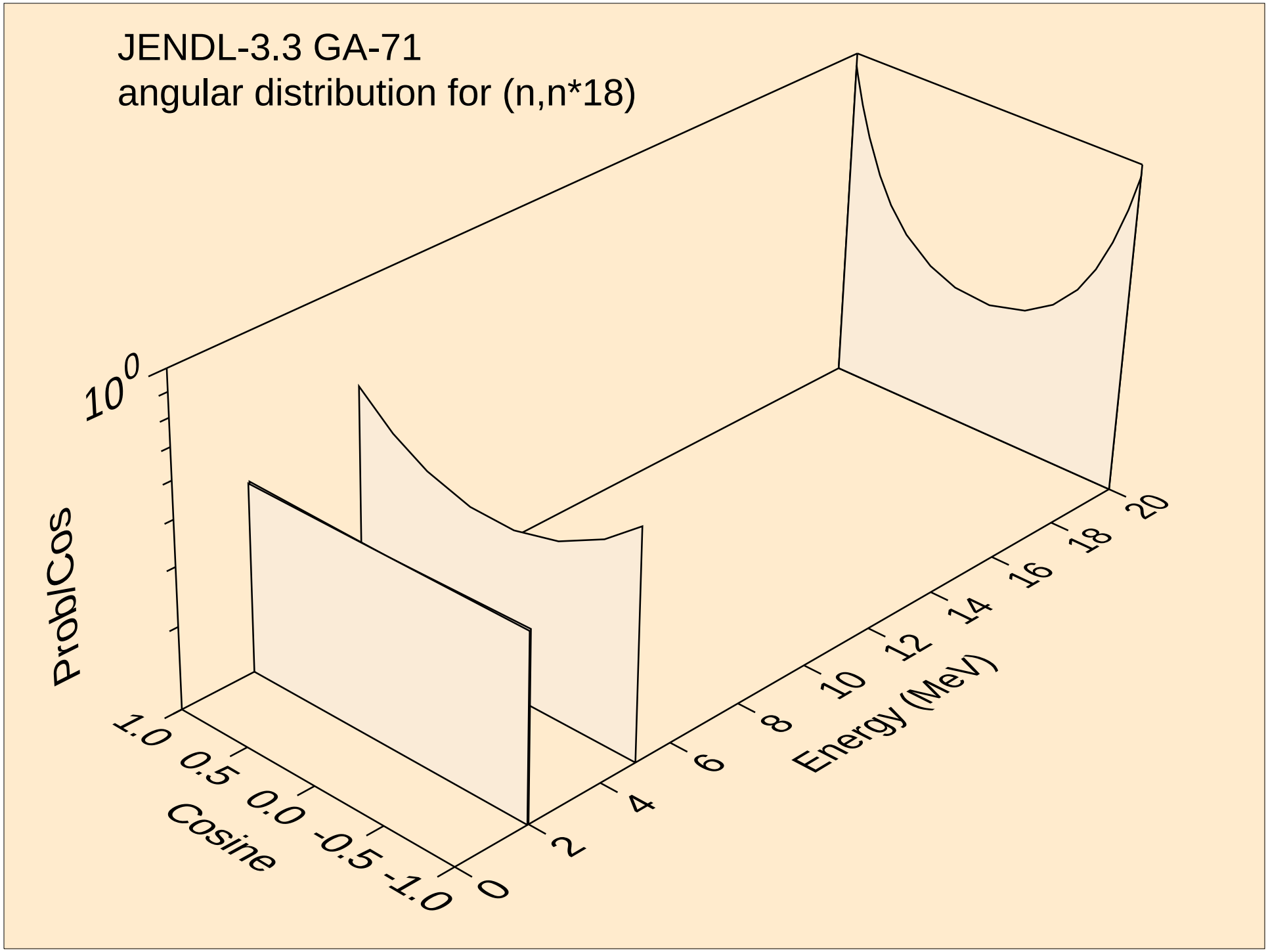
JENDL-3.3 GA-71
angular distribution for (n,n*18)
10^0
ProbCos
1.0
0.5
0.0
-0.5
-1.0
Cosine
0
2
4
6
8
10
12
14
16
18
20
Energy (MeV)

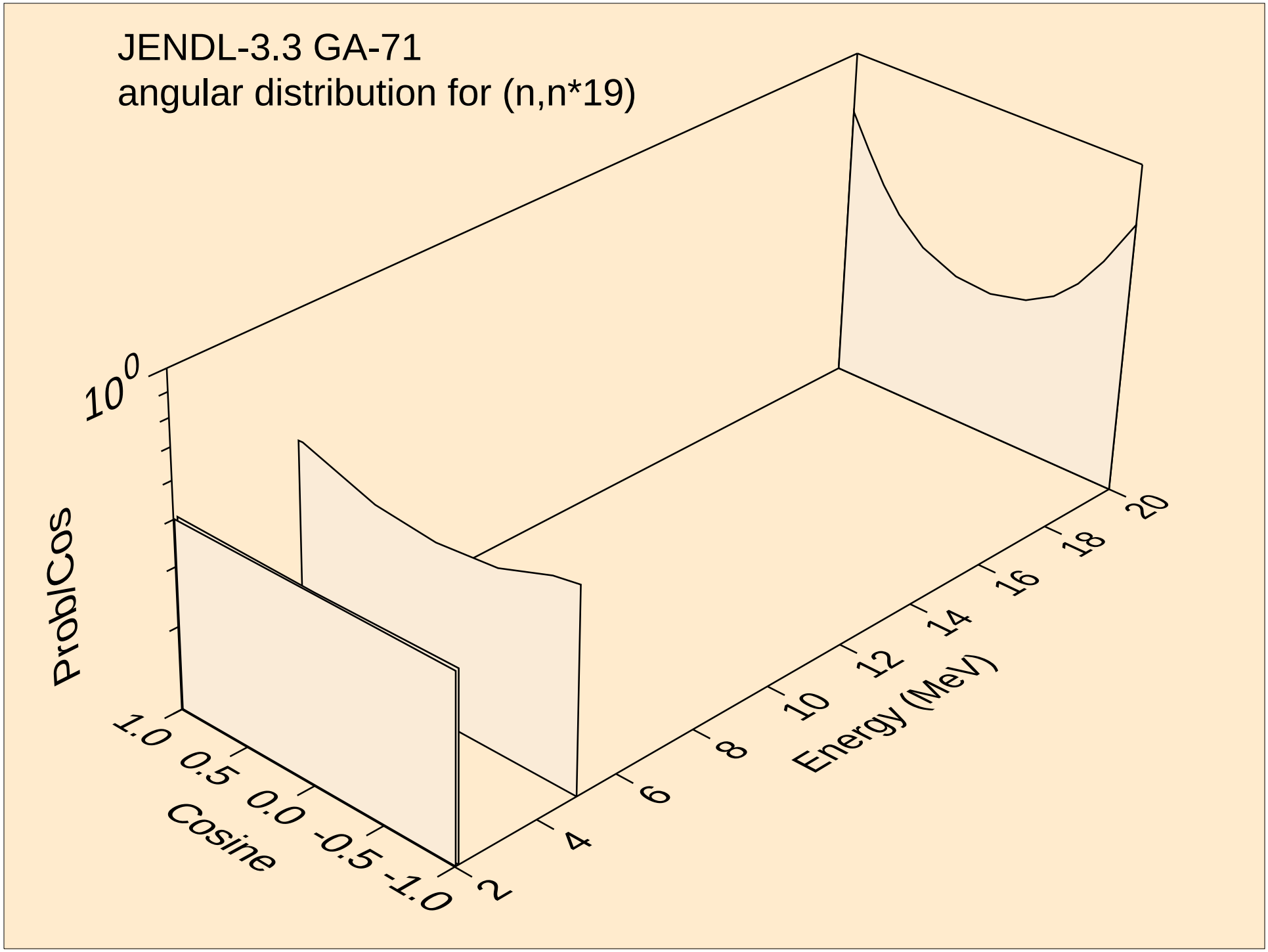
JENDL-3.3 GA-71
angular distribution for (n,n*19)
10^0
ProbCos
1.0
0.5
0.0
-0.5
-1.0
Cosine
2
4
6
8
10
12
14
16
18
20
Energy (MeV)

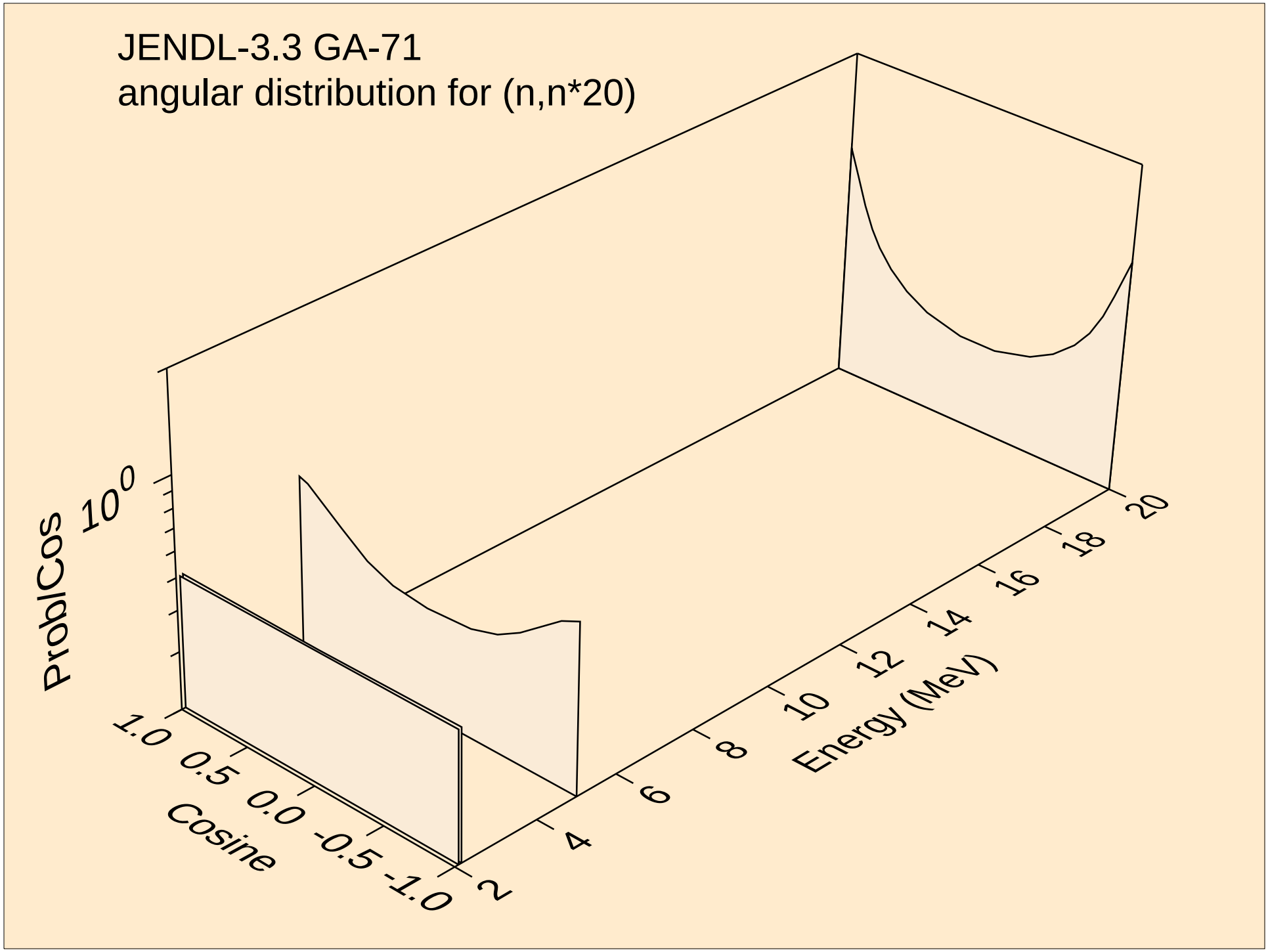
JENDL-3.3 GA-71
angular distribution for (n,n*20)
ProblCos
10^0
1.0
0.5
0.0
-0.5
-1.0
Cosine
2
4
6
8
10
12
14
16
18
20
Energy (MeV)

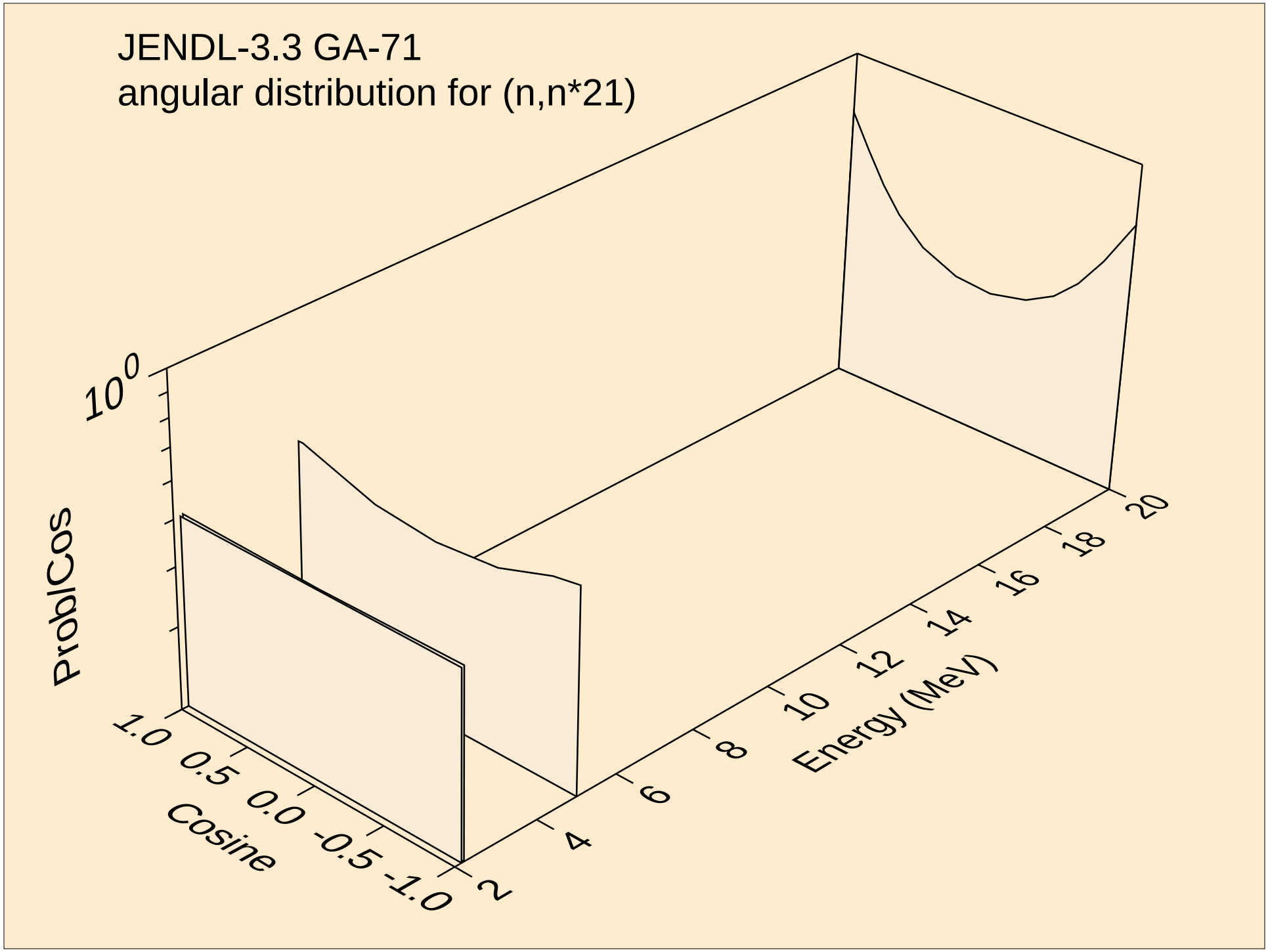
JENDL-3.3 GA-71
angular distribution for (n,n*21)
10^0
ProbCos
1.0
0.5
0.0
-0.5
-1.0
Cosine
2
4
6
8
10
12
14
16
18
20
Energy (MeV)

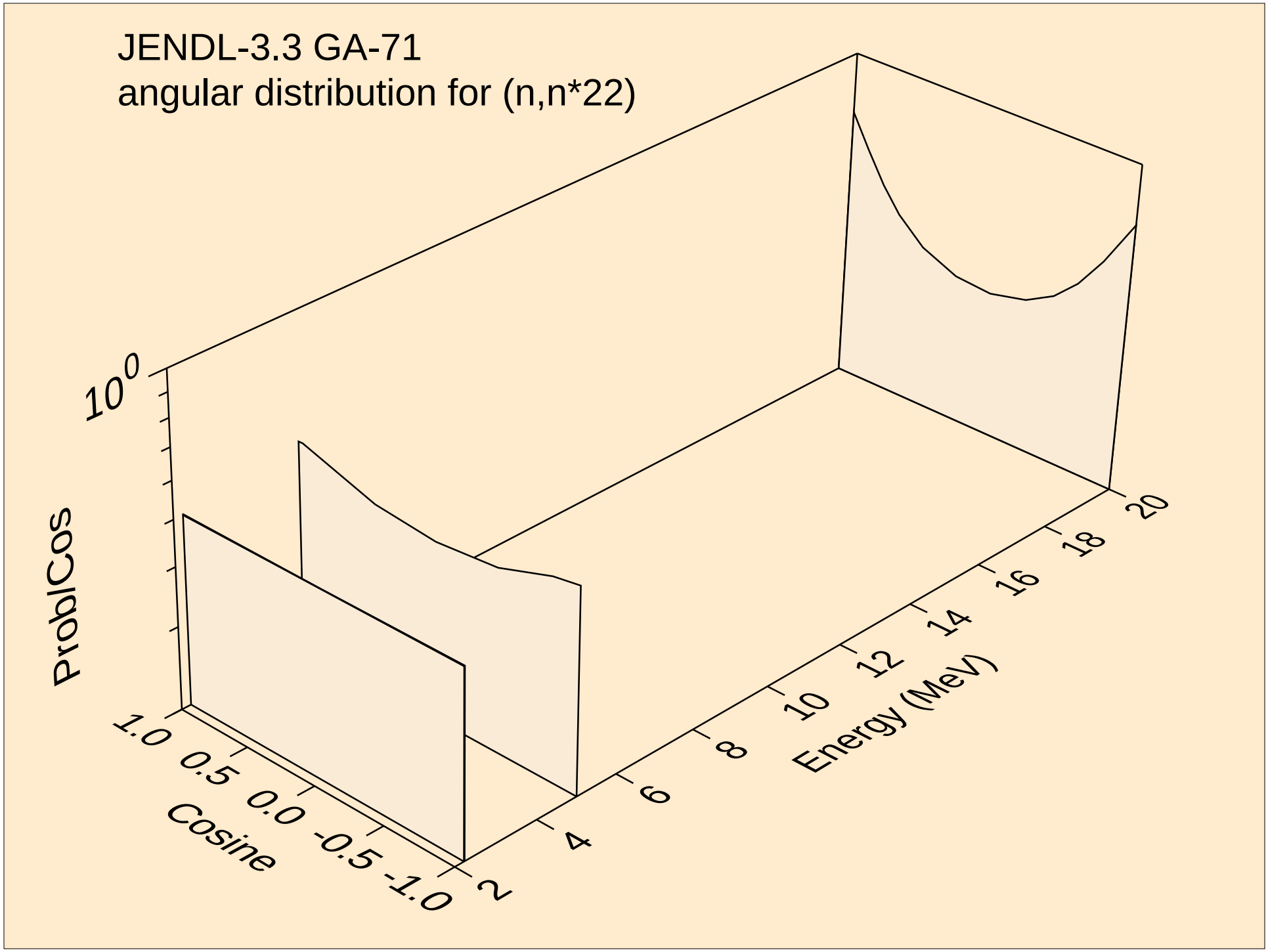
JENDL-3.3 GA-71
angular distribution for (n,n*22)
10^0
ProbCos
1.0
0.5
0.0
-0.5
-1.0
Cosine
2
4
6
8
10
12
14
16
18
20
Energy (MeV)

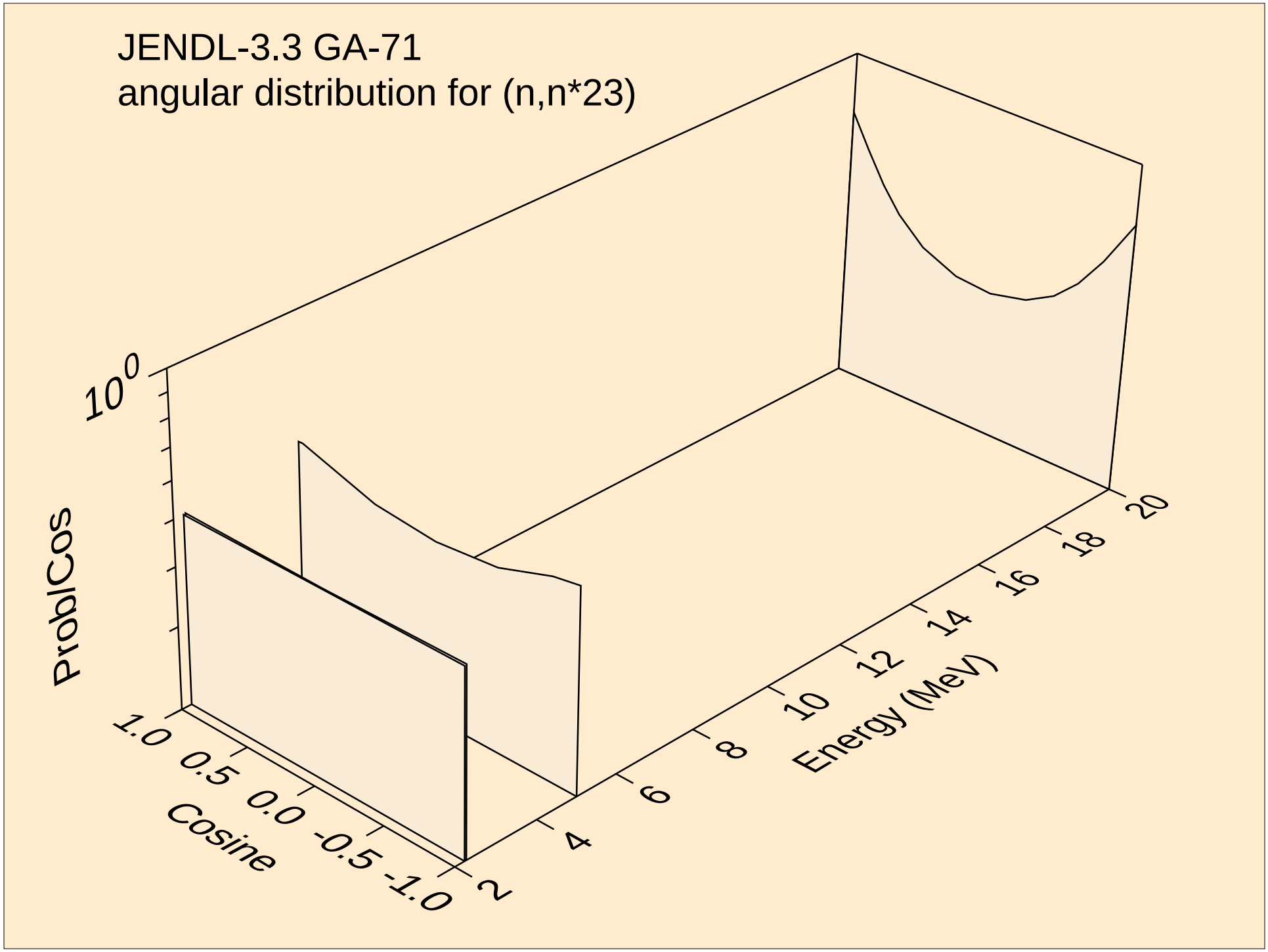
JENDL-3.3 GA-71
angular distribution for (n,n*23)
10^0
ProbCos
1.0
0.5
0.0
-0.5
-1.0
Cosine
2
4
6
8
10
12
14
16
18
20
Energy (MeV)

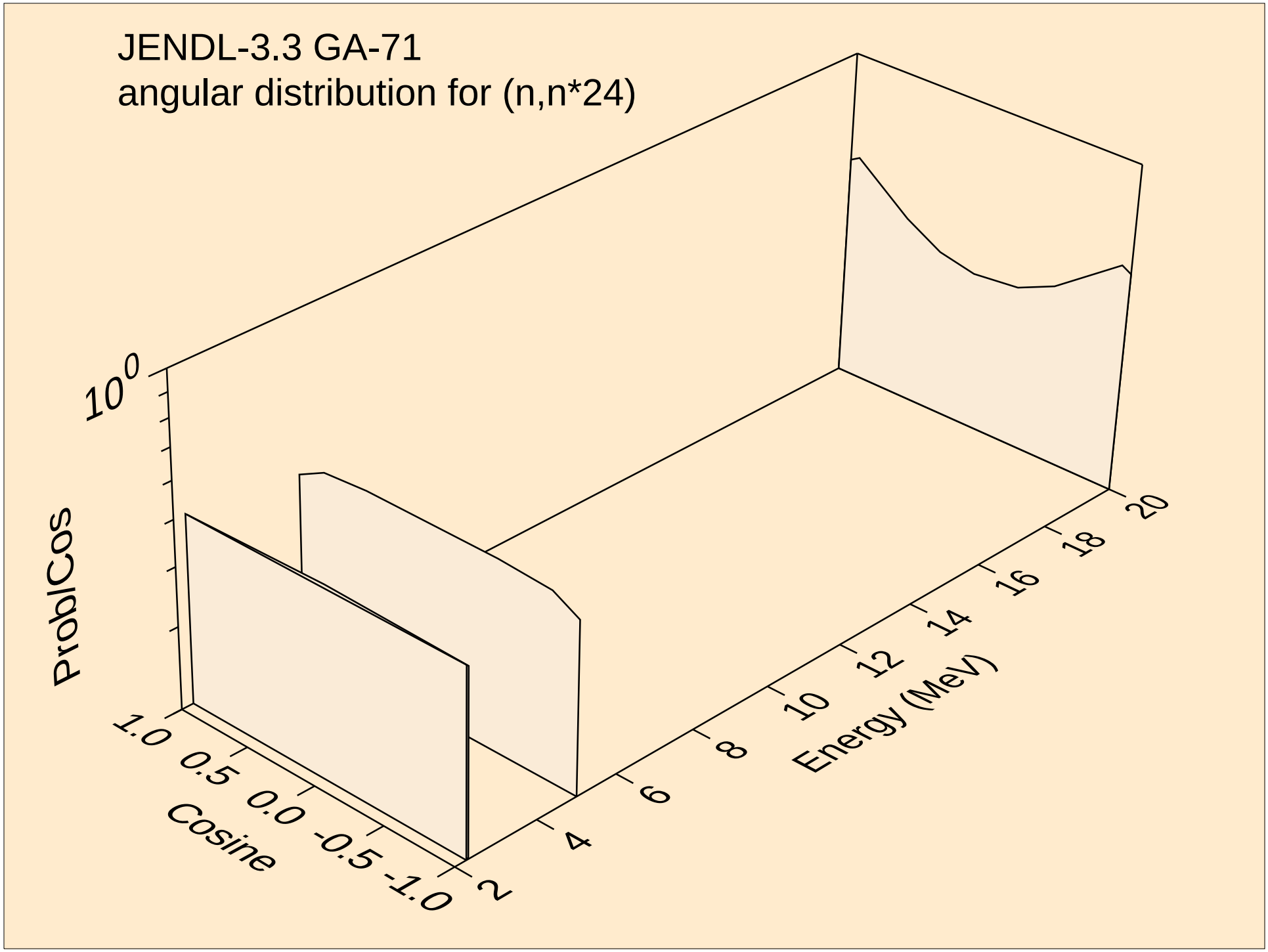
JENDL-3.3 GA-71
angular distribution for (n,n*24)
10^0
ProbCos
1.0
0.5
0.0
-0.5
-1.0
Cosine
2
4
6
8
10
12
14
16
18
20
Energy (MeV)

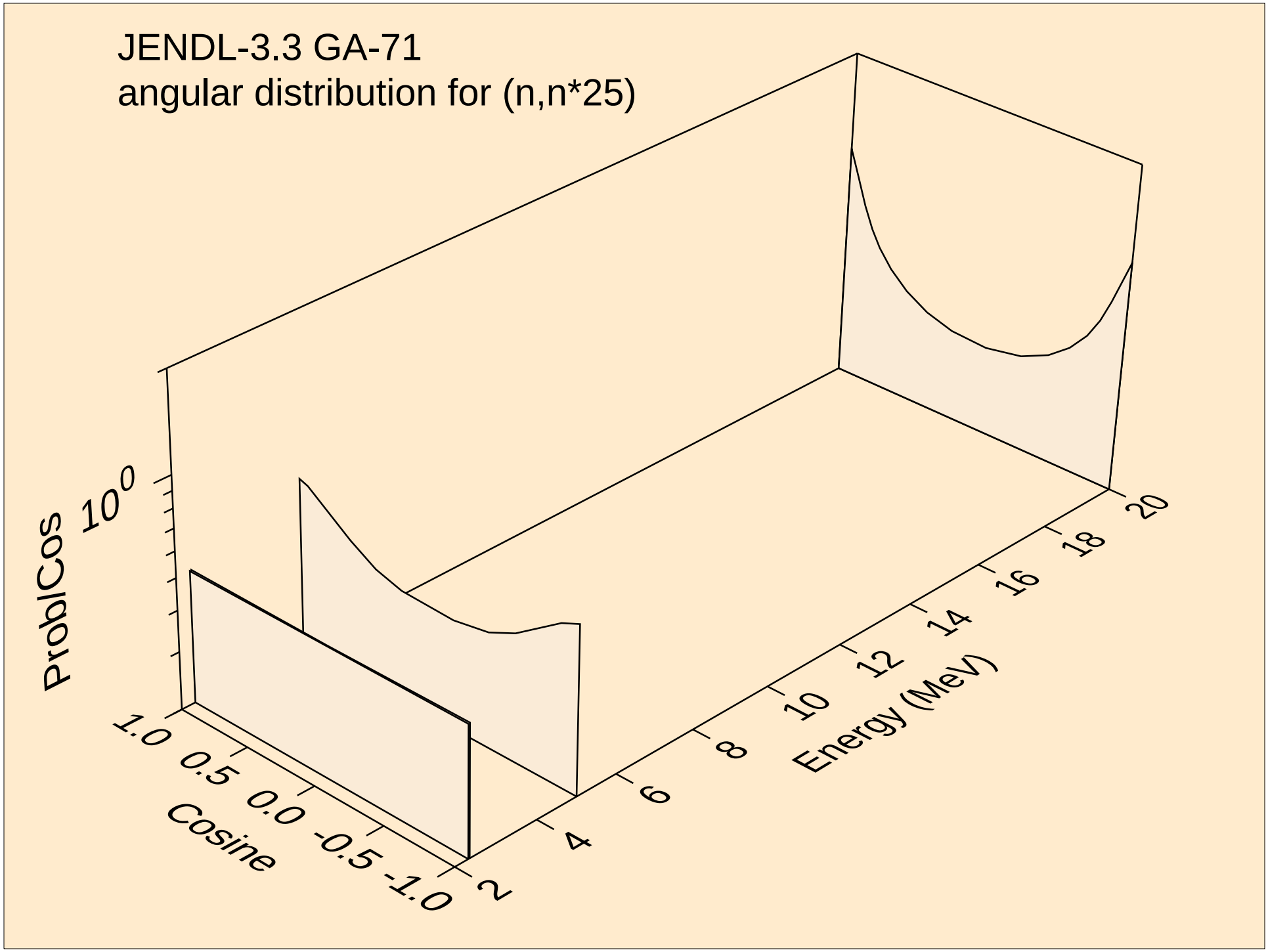
JENDL-3.3 GA-71
angular distribution for (n,n*25)
ProbCos
10^0
1.0
0.5
0.0
-0.5
-1.0
Cosine
2
4
6
8
10
12
14
16
18
20
Energy (MeV)

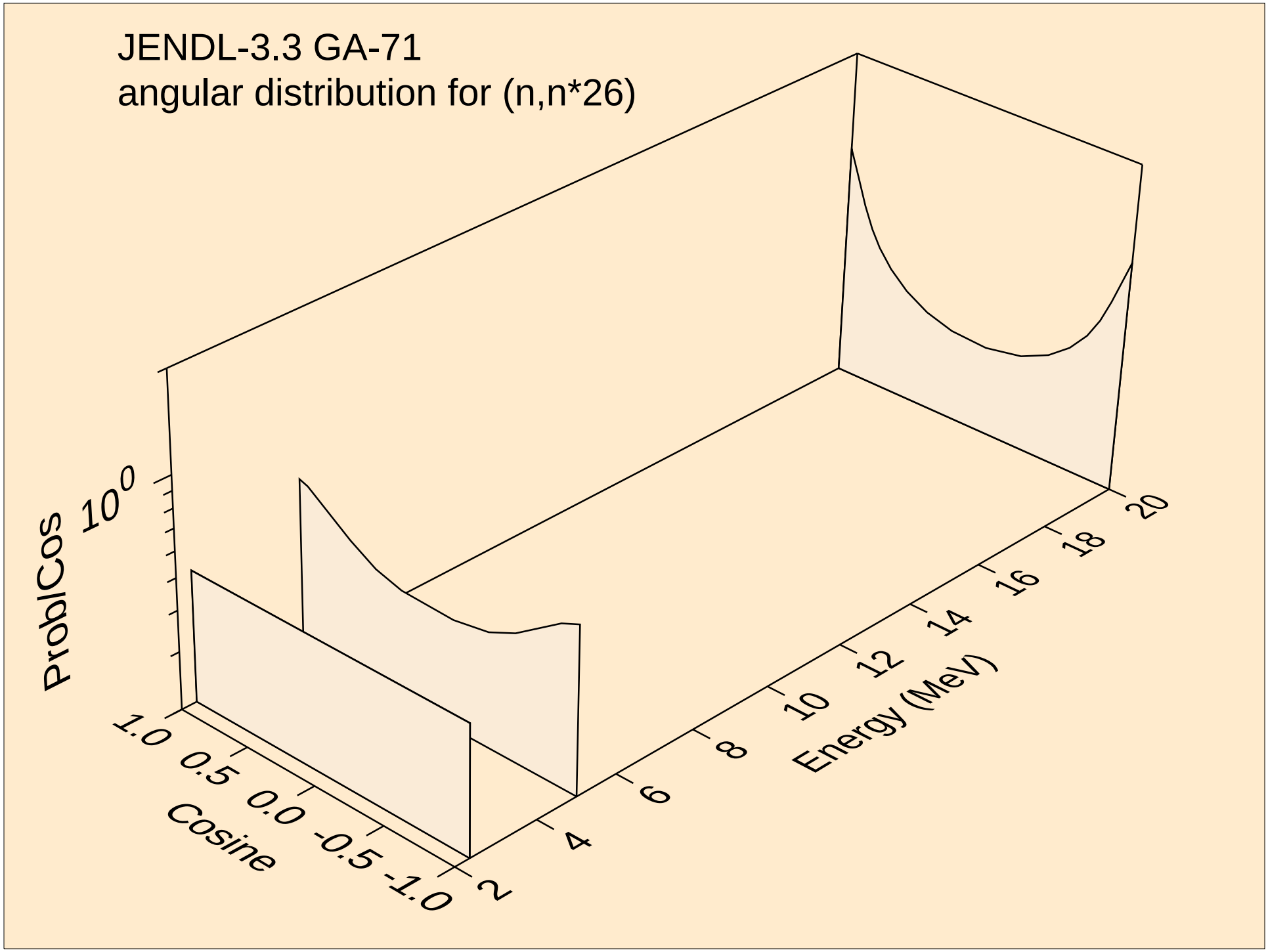
JENDL-3.3 GA-71
angular distribution for (n,n*26)
ProblCos
10^0
1.0
0.5
0.0
-0.5
-1.0
Cosine
2
4
6
8
10
12
14
16
18
20
Energy (MeV)

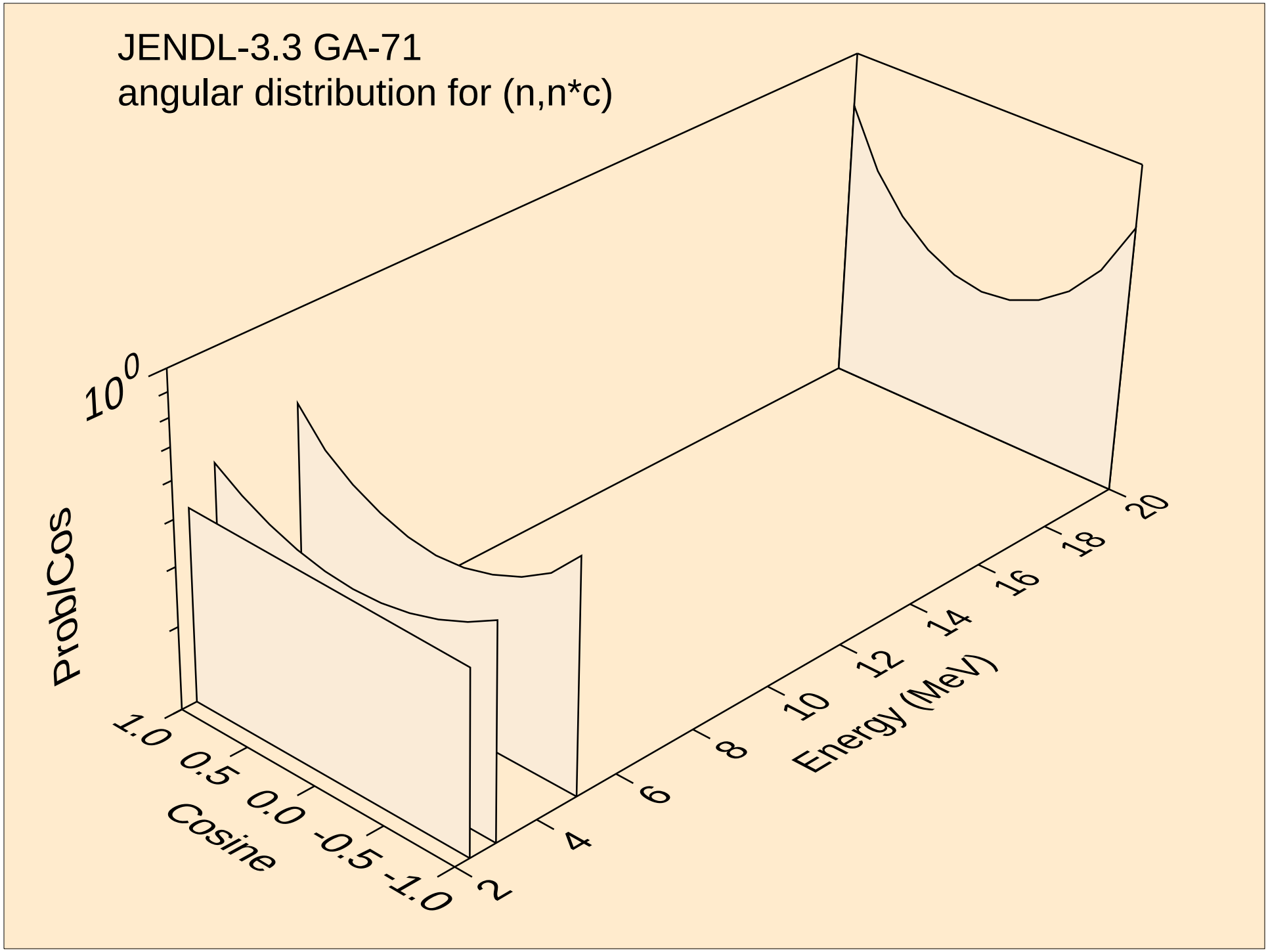
JENDL-3.3 GA-71
angular distribution for (n,n*c)
10^0
ProbCos
1.0
0.5
0.0
-0.5
-1.0
Cosine
2
4
6
8
10
12
14
16
18
20
Energy (MeV)

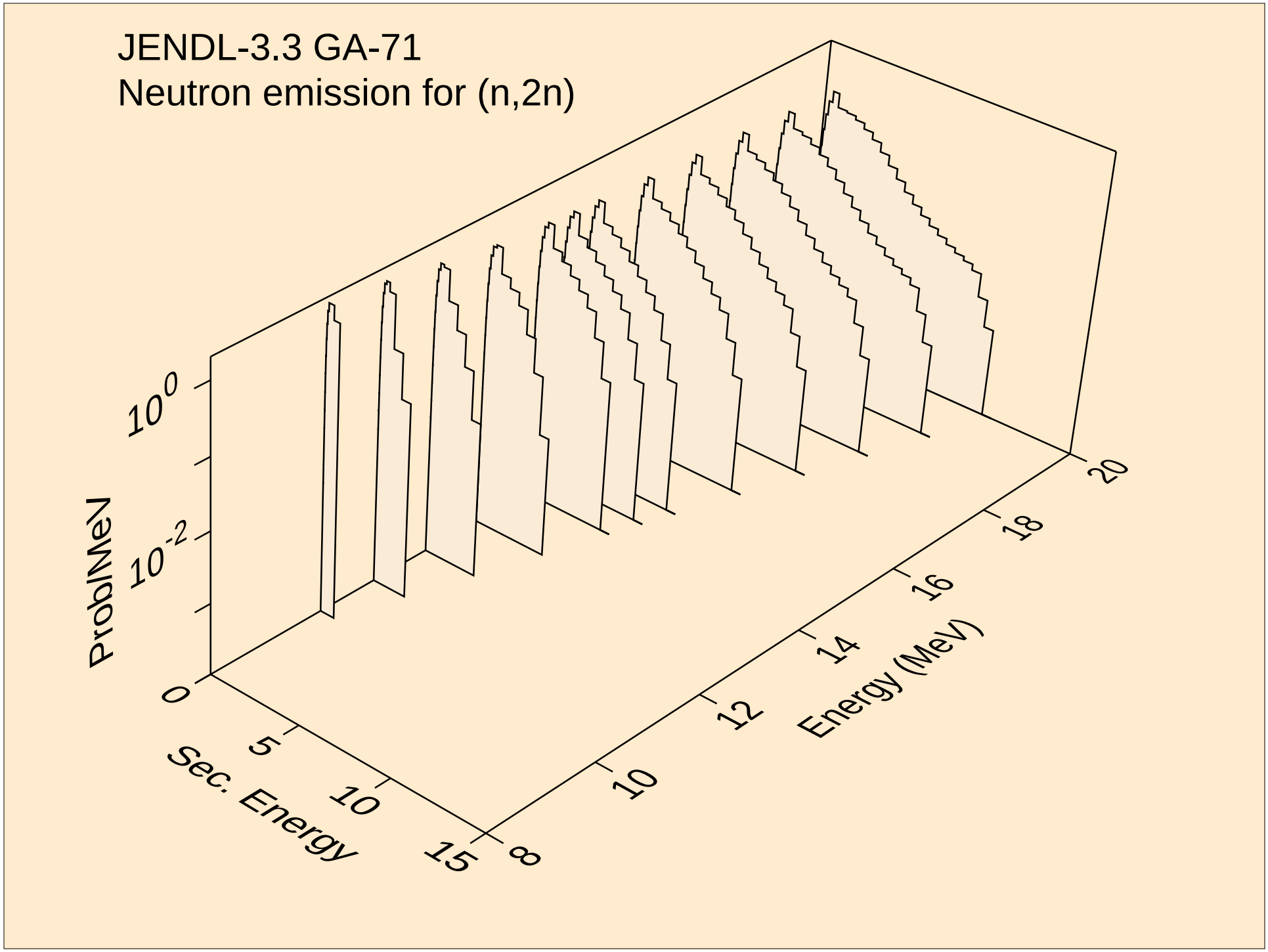
JENDL-3.3 GA-71
Neutron emission for (n,2n)
Prob/MeV
10^0
10^{-2}
0
5
10
15
Sec. Energy
8
10
12
14
16
18
20
Energy (MeV)

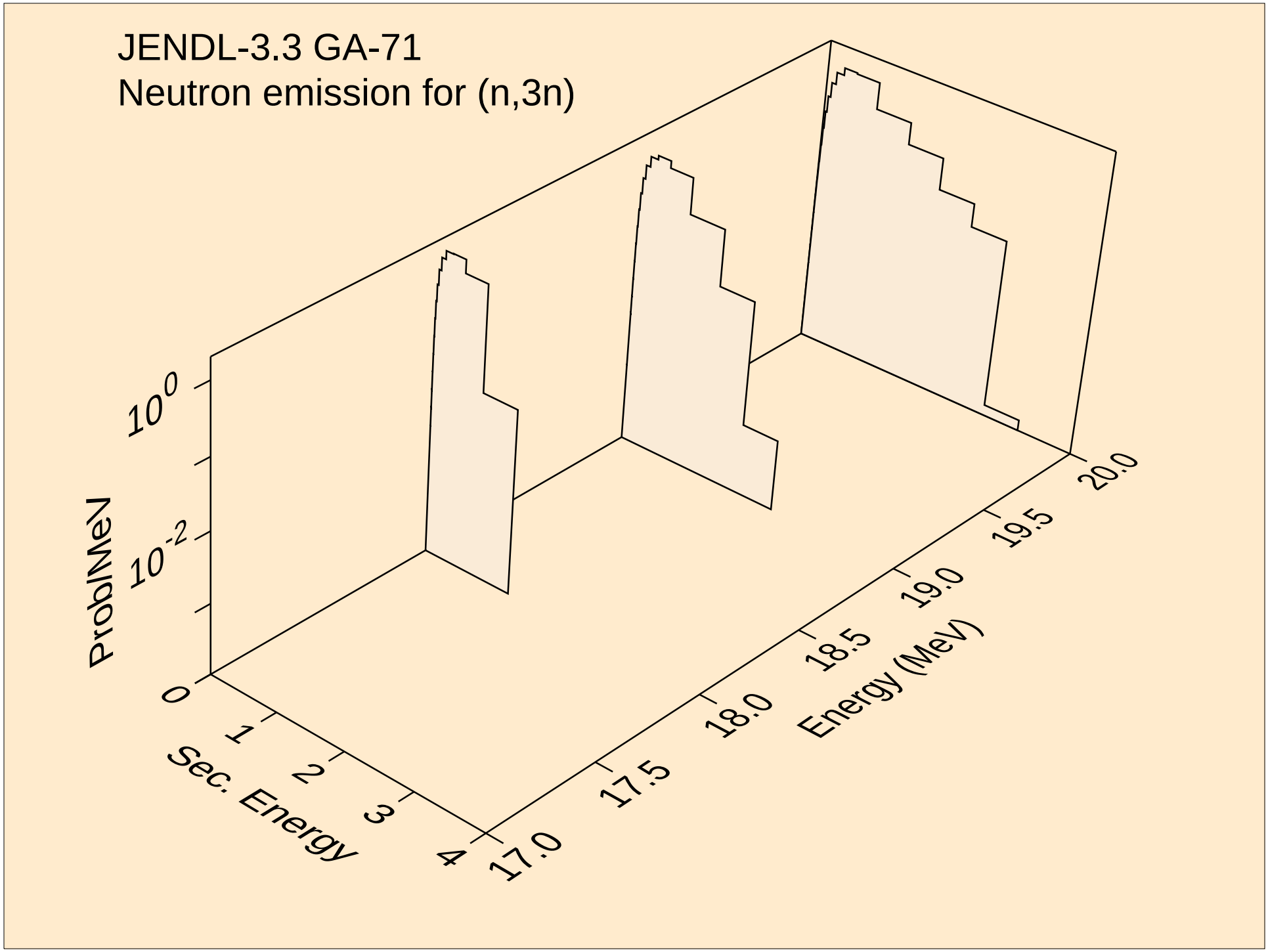
JENDL-3.3 GA-71
Neutron emission for (n,3n)
Prob/MeV
10^0
10^{-2}
0
1
2
3
4
Sec. Energy
17.0
17.5
18.0
18.5
19.0
19.5
20.0
Energy (MeV)

JENDL-3.3 GA-71
Neutron emission for (n,n*)a

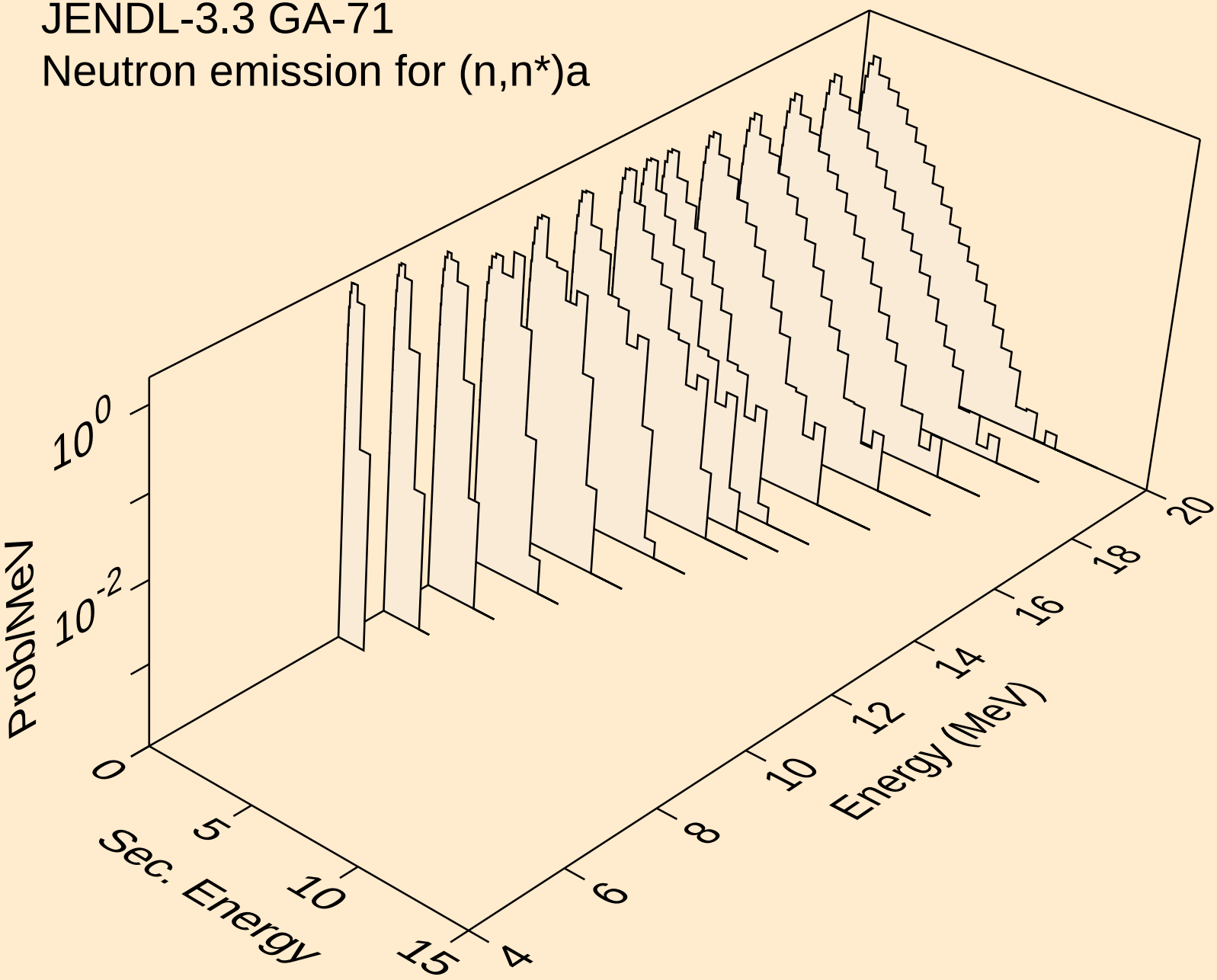

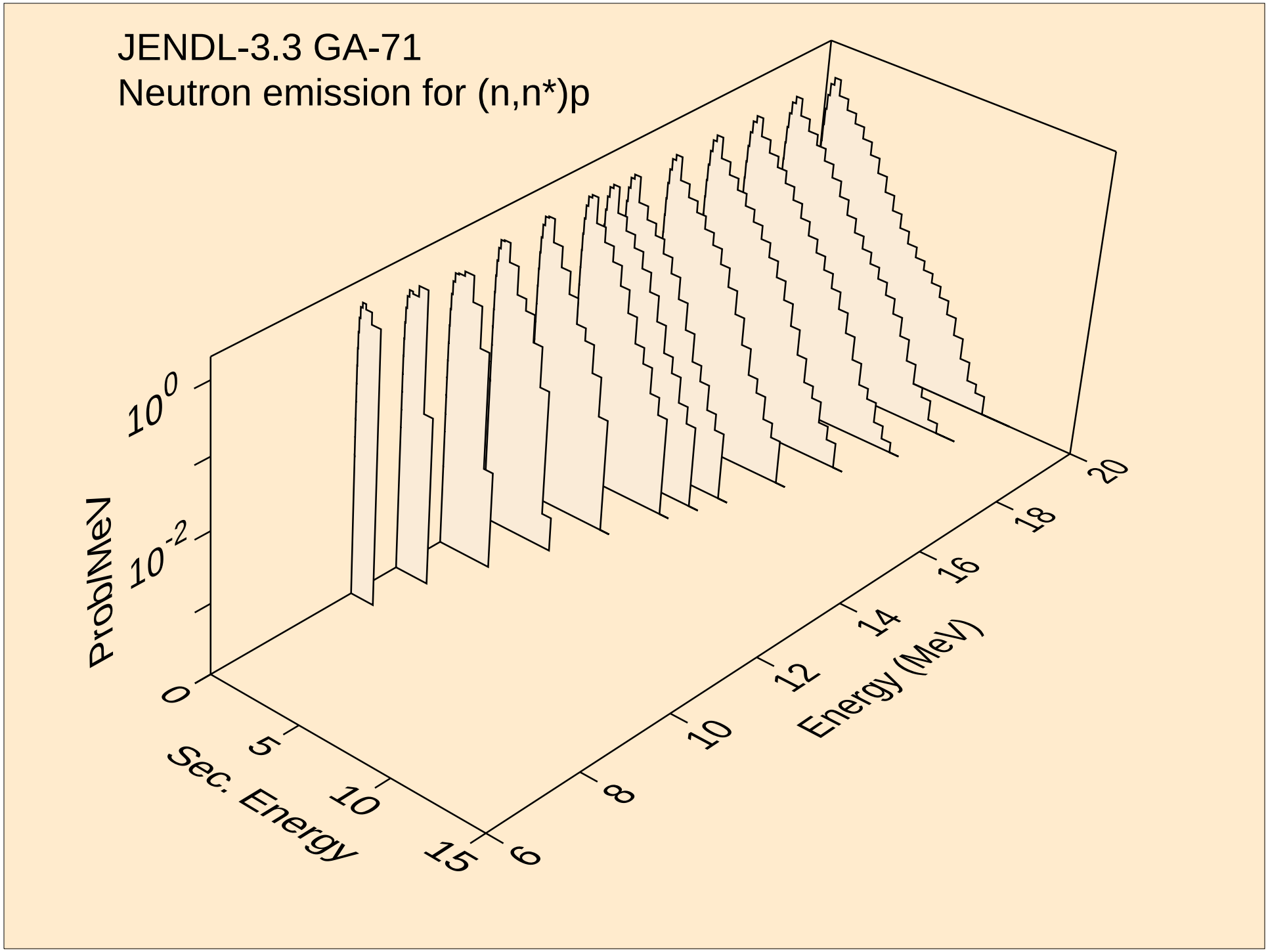
JENDL-3.3 GA-71
Neutron emission for (n,n*)p
Prob/MeV
10^0
10^{-2}
0
5
10
15
Sec. Energy
6
8
10
12
14
16
18
20
Energy (MeV)

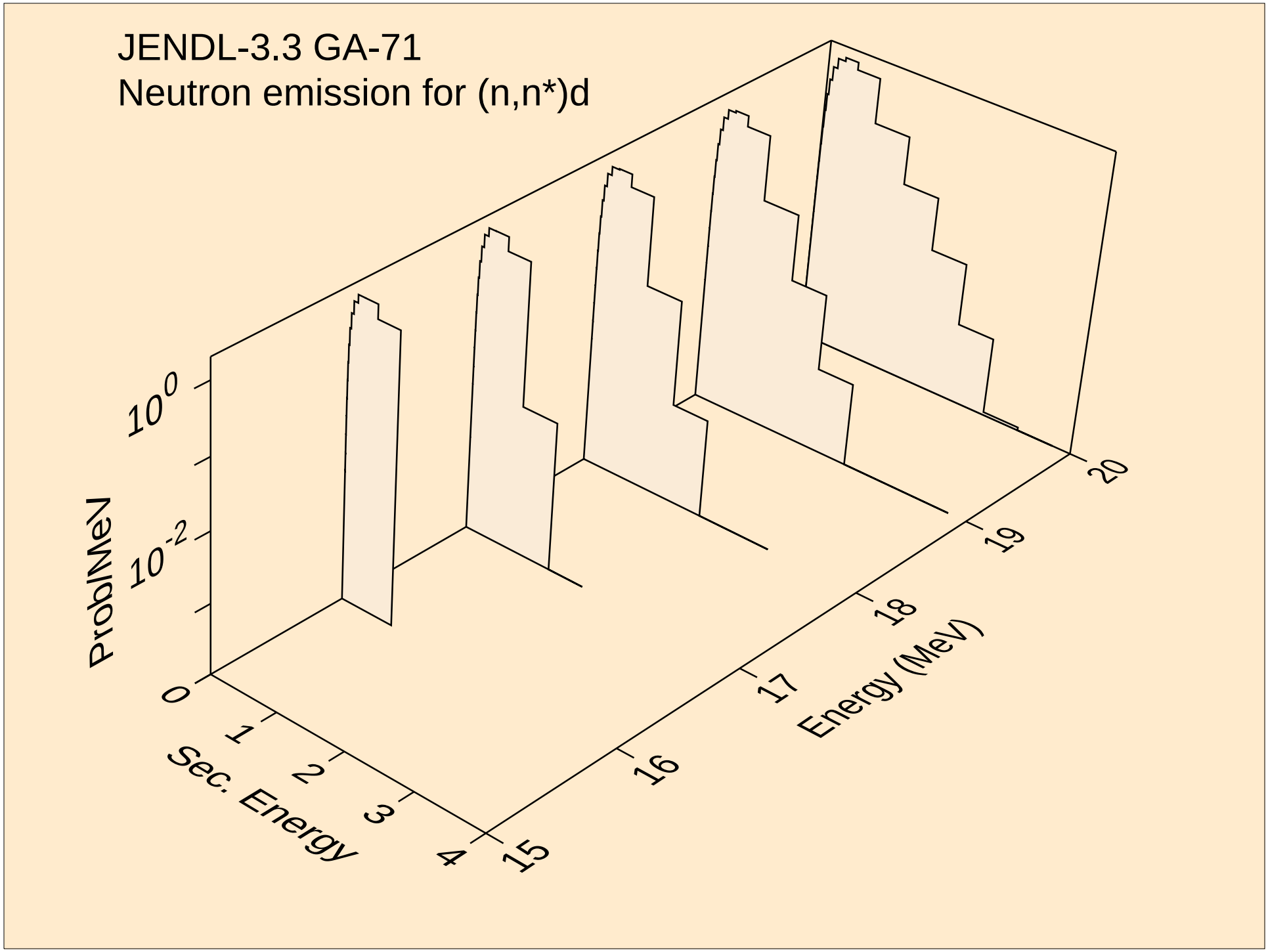
JENDL-3.3 GA-71
Neutron emission for (n,n*)d
Prob/MeV
10^0
10^{-2}
0
Sec. Energy
1
2
3
4
Energy (MeV)
15
16
17
18
19
20

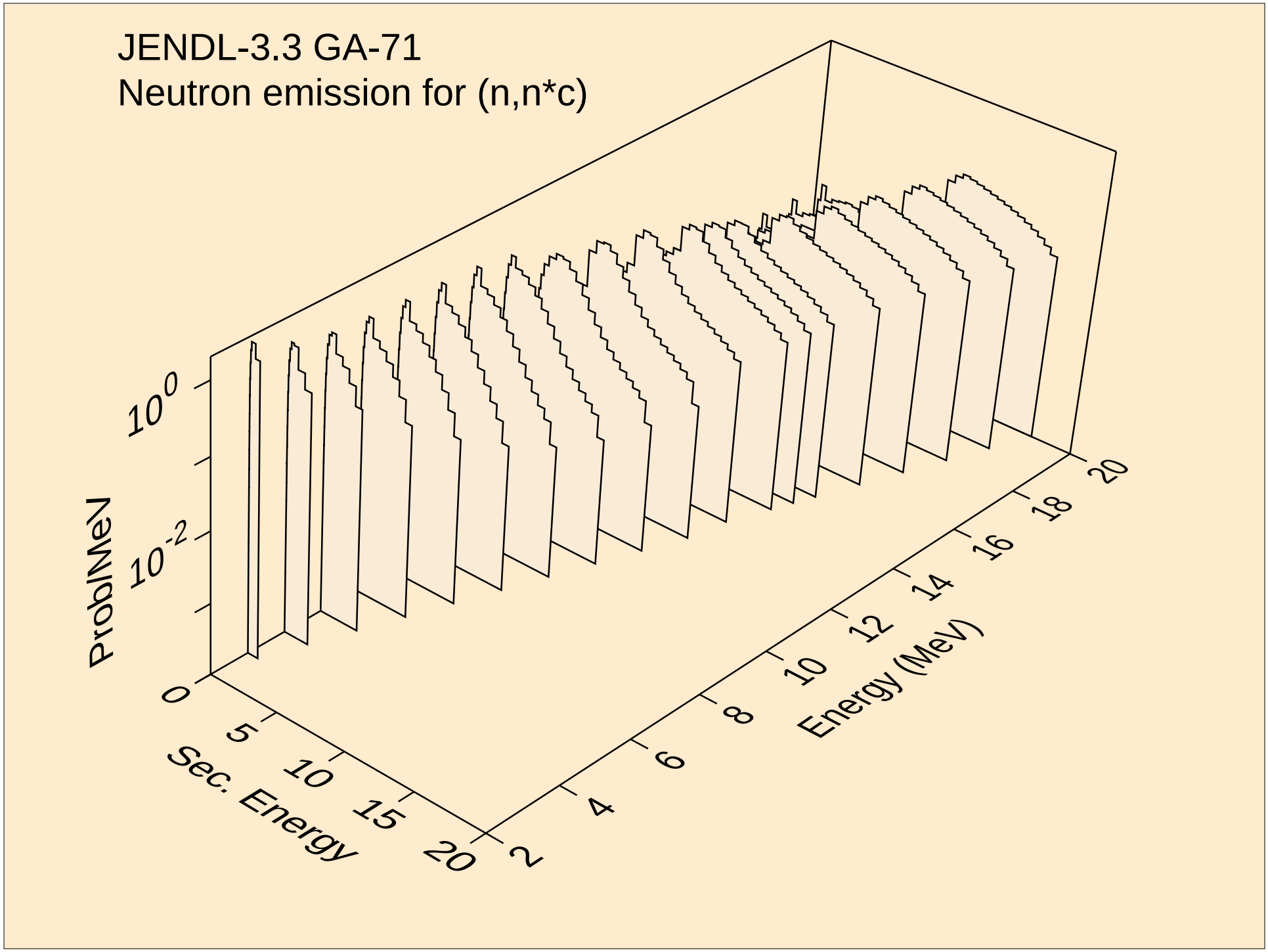
JENDL-3.3 GA-71
Neutron emission for (n,n*c)
Prob/MeV
10^0
10^{-2}
0
5
10
15
20
Sec. Energy
2
4
6
8
10
12
14
16
18
20
Energy (MeV)