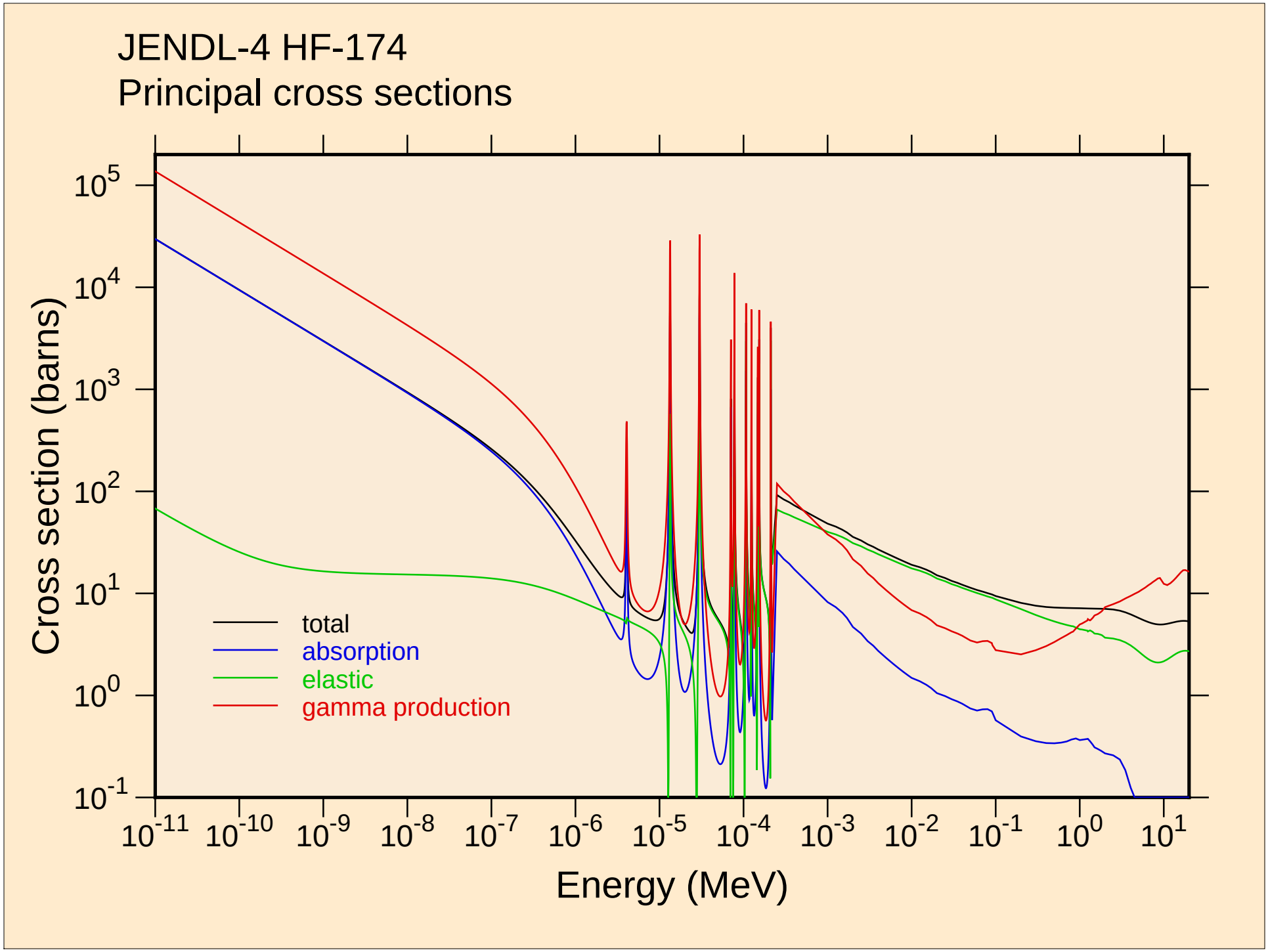
JENDL-4 HF-174
Principal cross sections
Cross section (barns)
Energy (MeV)
total
absorption
elastic
gamma production
10^{5}
10^{4}
10^{3}
10^{2}
10^{1}
10^{0}
10^{-1}
10^{-11}
10^{-10}
10^{-9}
10^{-8}
10^{-7}
10^{-6}
10^{-5}
10^{-4}
10^{-3}
10^{-2}
10^{-1}
10^{0}
10^{1}

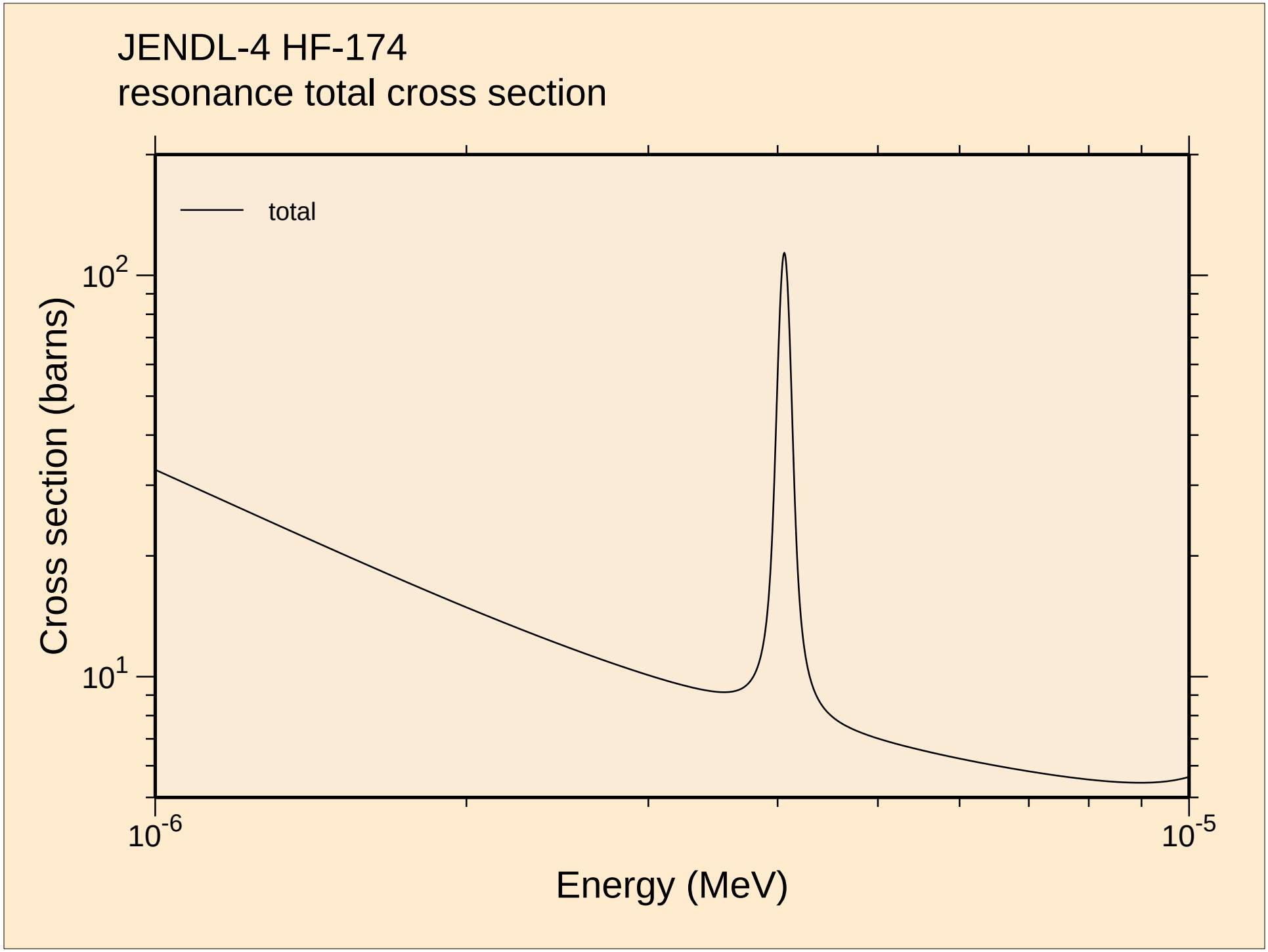
JENDL-4 HF-174
resonance total cross section
total
Cross section (barns)
10^2
10^1
10^{-6}
10^{-5}
Energy (MeV)

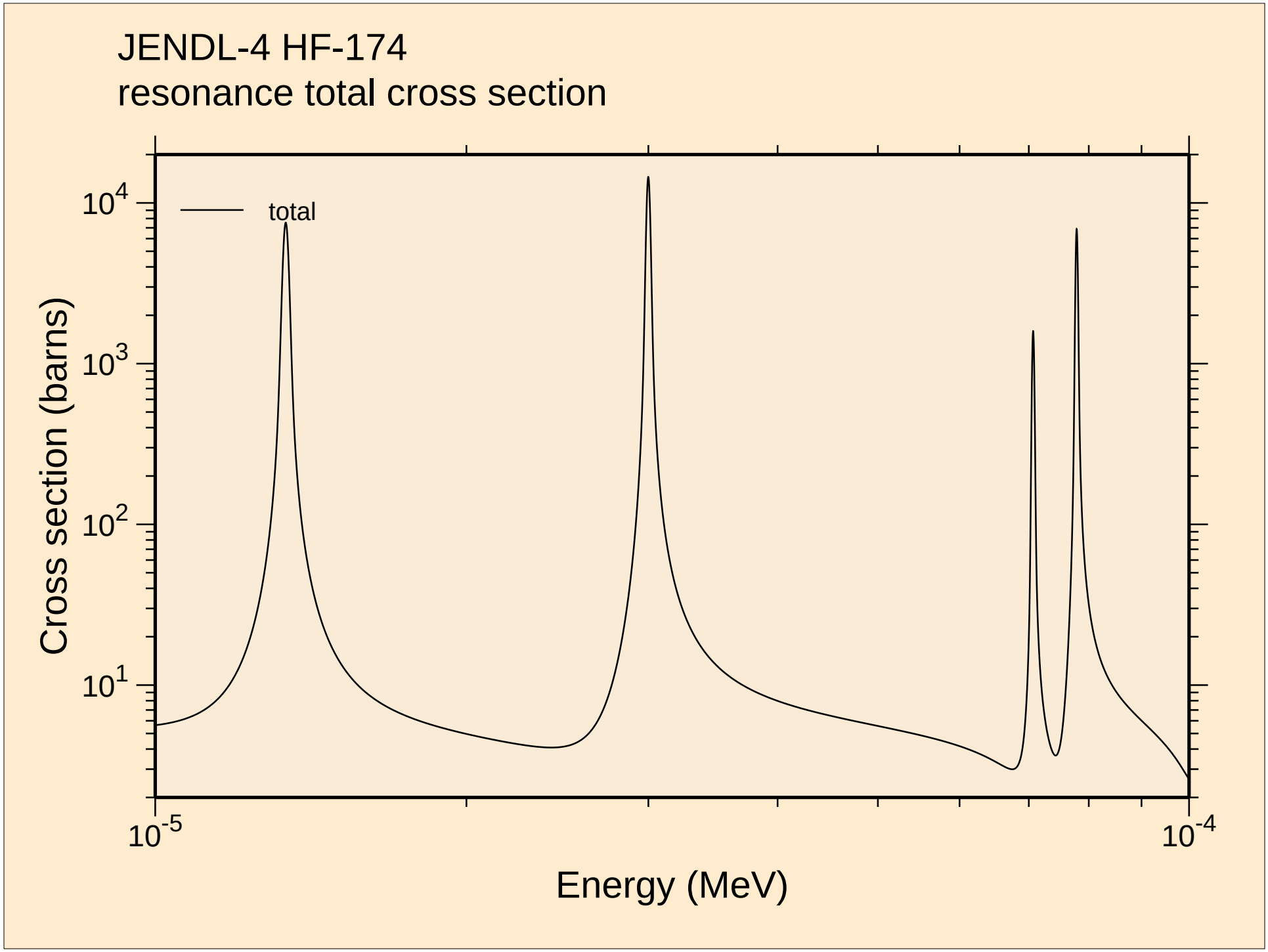
JENDL-4 HF-174
resonance total cross section
total
Cross section (barns)
10^4
10^3
10^2
10^1
10^{-5}
10^{-4}
Energy (MeV)

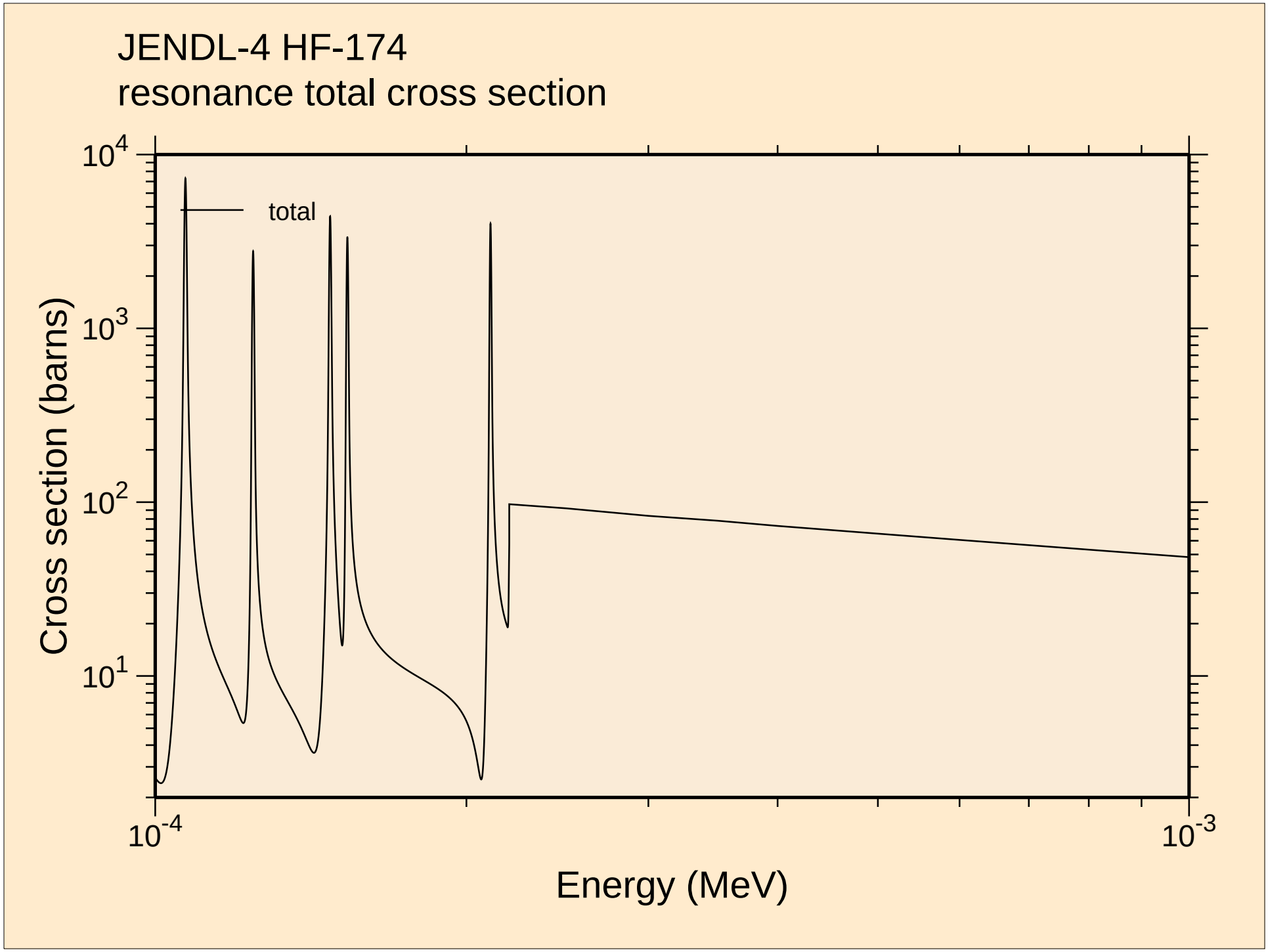
JENDL-4 HF-174
resonance total cross section
total
Cross section (barns)
10^4
10^3
10^2
10^1
10^{-4}
10^{-3}
Energy (MeV)

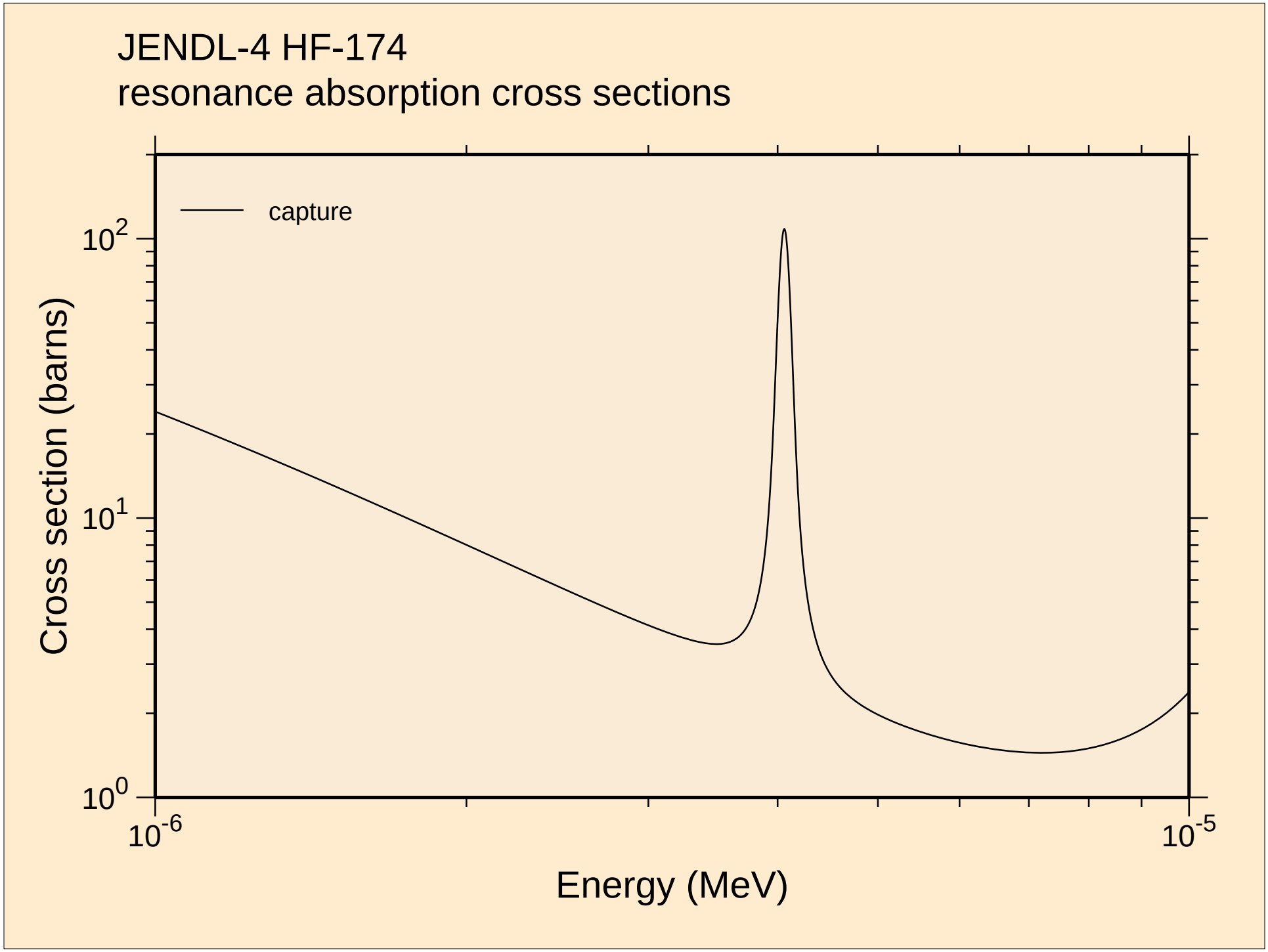
JENDL-4 HF-174
resonance absorption cross sections
capture
Cross section (barns)
10^2
10^1
10^0
10^{-6}
10^{-5}
Energy (MeV)

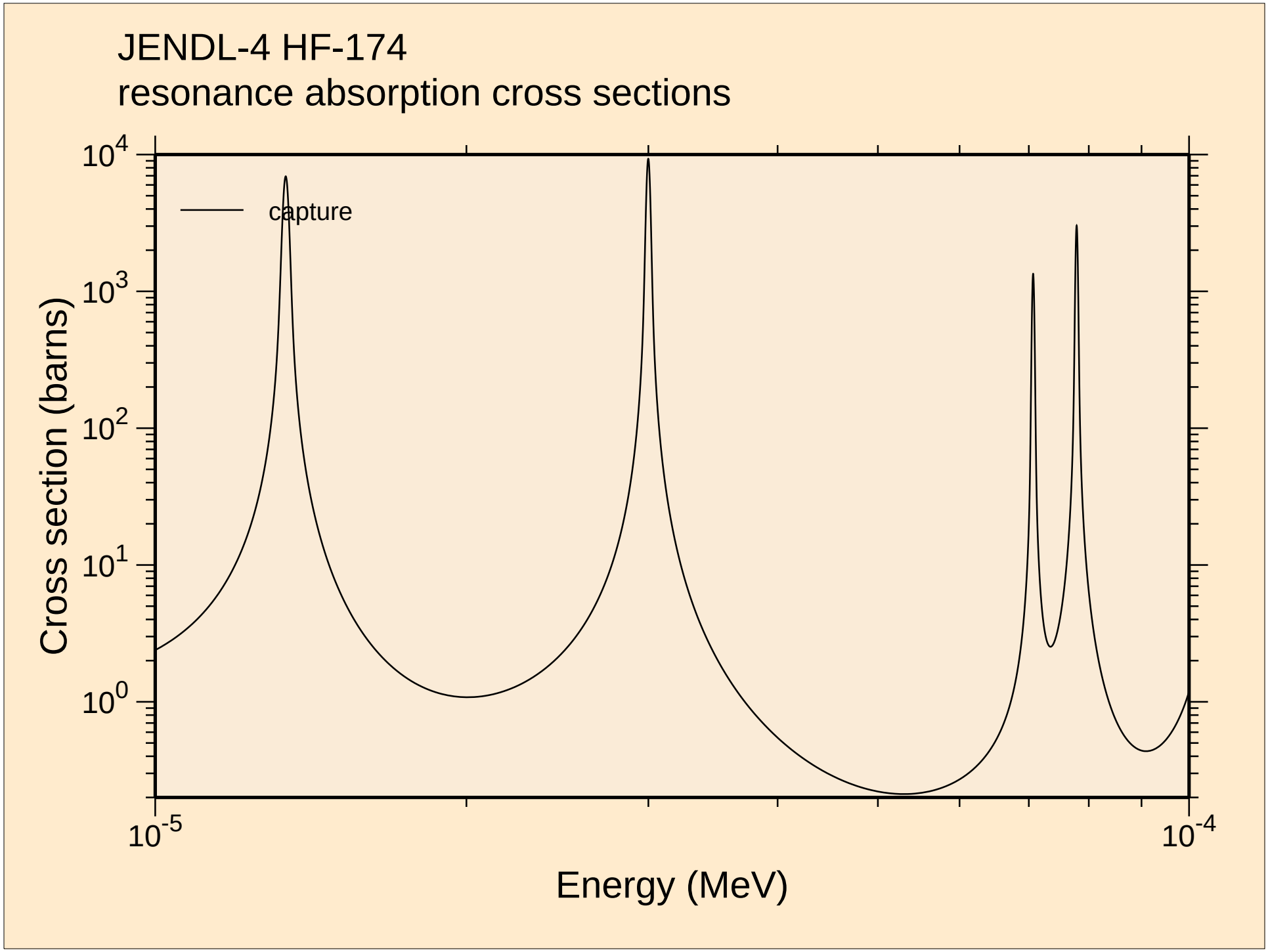
JENDL-4 HF-174
resonance absorption cross sections
capture
Cross section (barns)
10^4
10^3
10^2
10^1
10^0
10^{-5}
10^{-4}
Energy (MeV)

JENDL-4 HF-174
resonance absorption cross sections

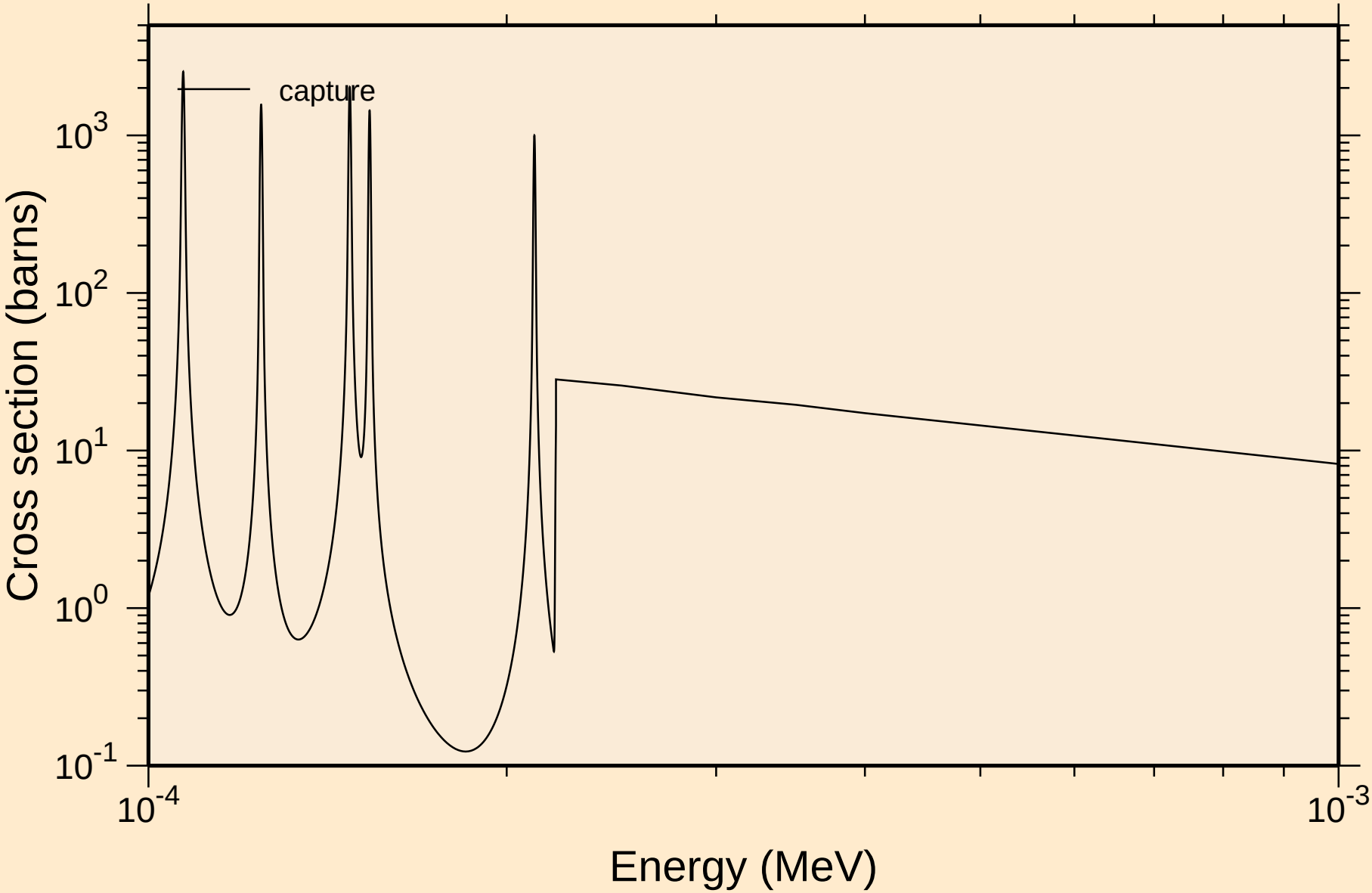

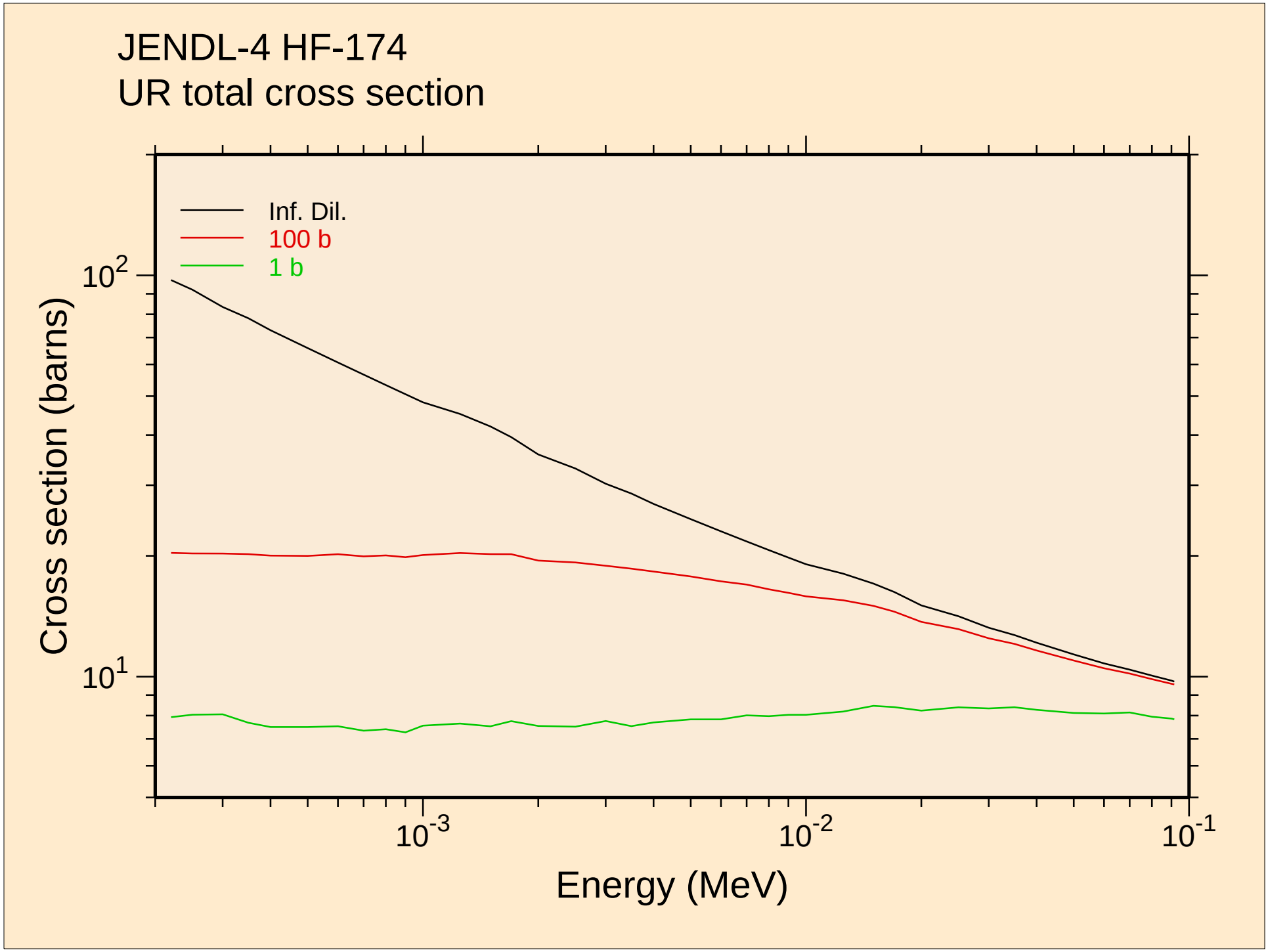
JENDL-4 HF-174
UR total cross section
Inf. Dil.
100 b
1 b
Cross section (barns)
10^2
10^1
10^-3
10^-2
10^-1
Energy (MeV)

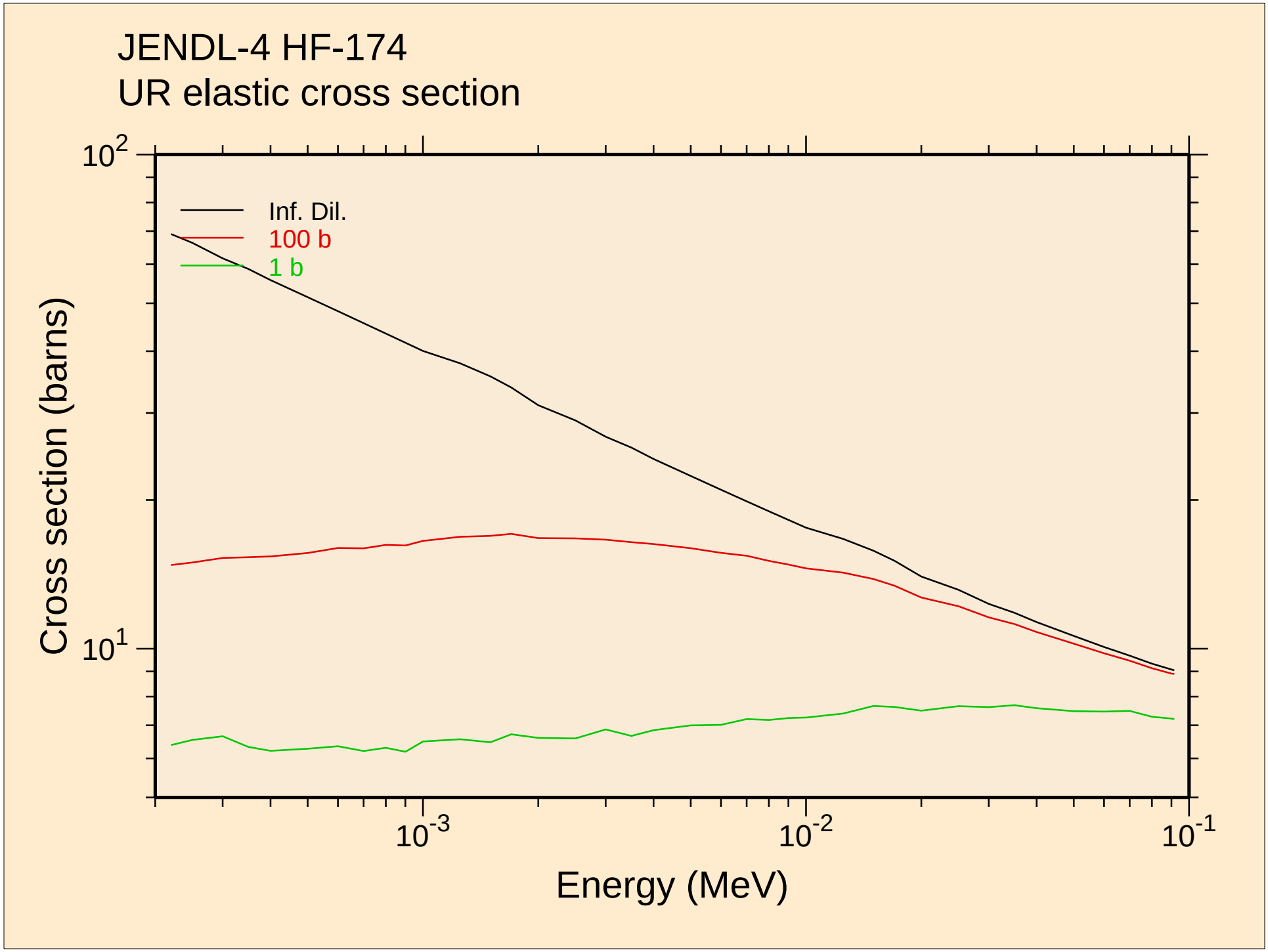
JENDL-4 HF-174
UR elastic cross section
Inf. Dil.
100 b
1 b
Cross section (barns)
Energy (MeV)
10^2
10^1
10^-3
10^-2
10^-1

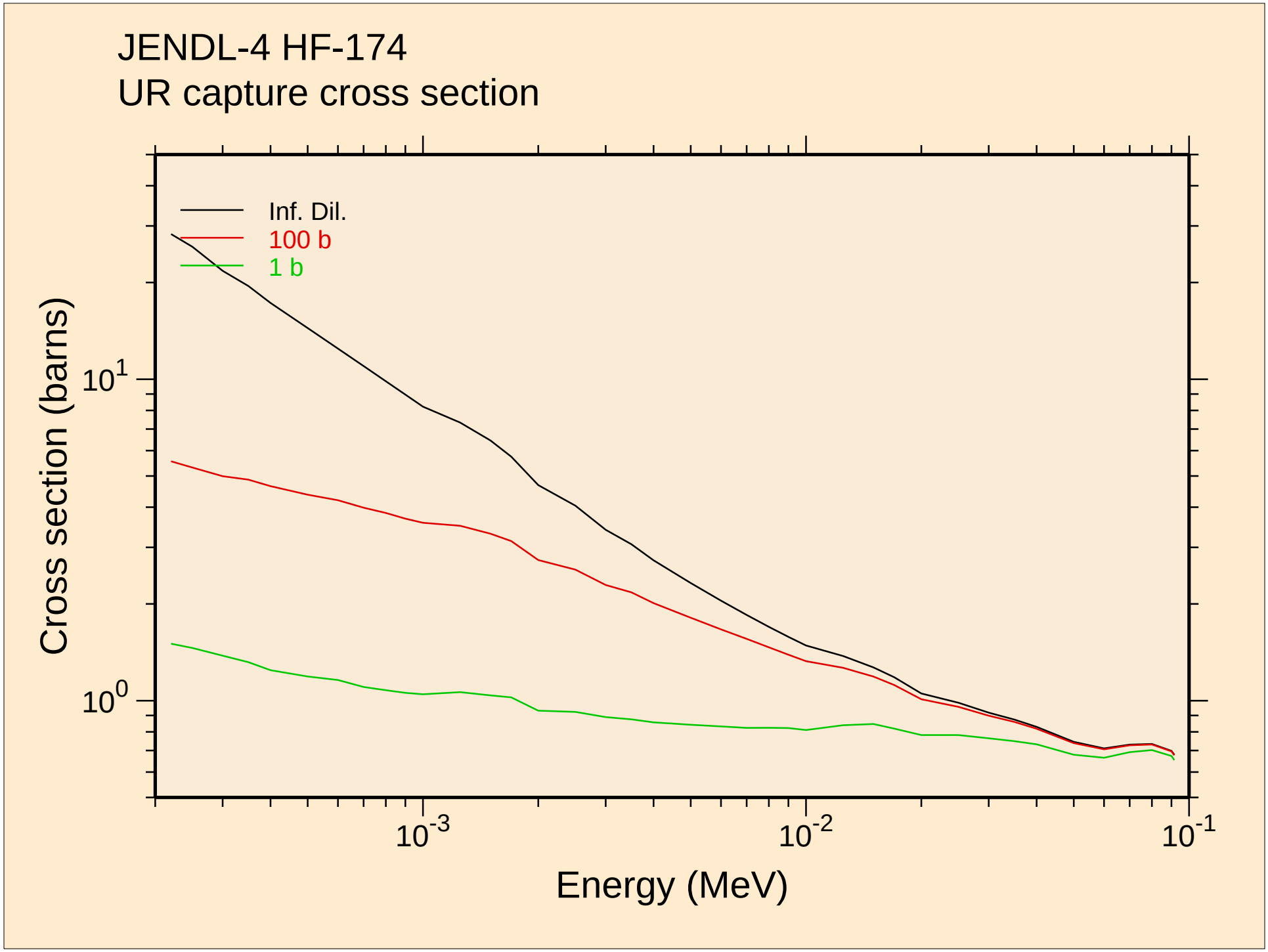
JENDL-4 HF-174
UR capture cross section
Inf. Dil.
100 b
1 b
Cross section (barns)
10^1
10^0
10^{-3}
10^{-2}
10^{-1}
Energy (MeV)

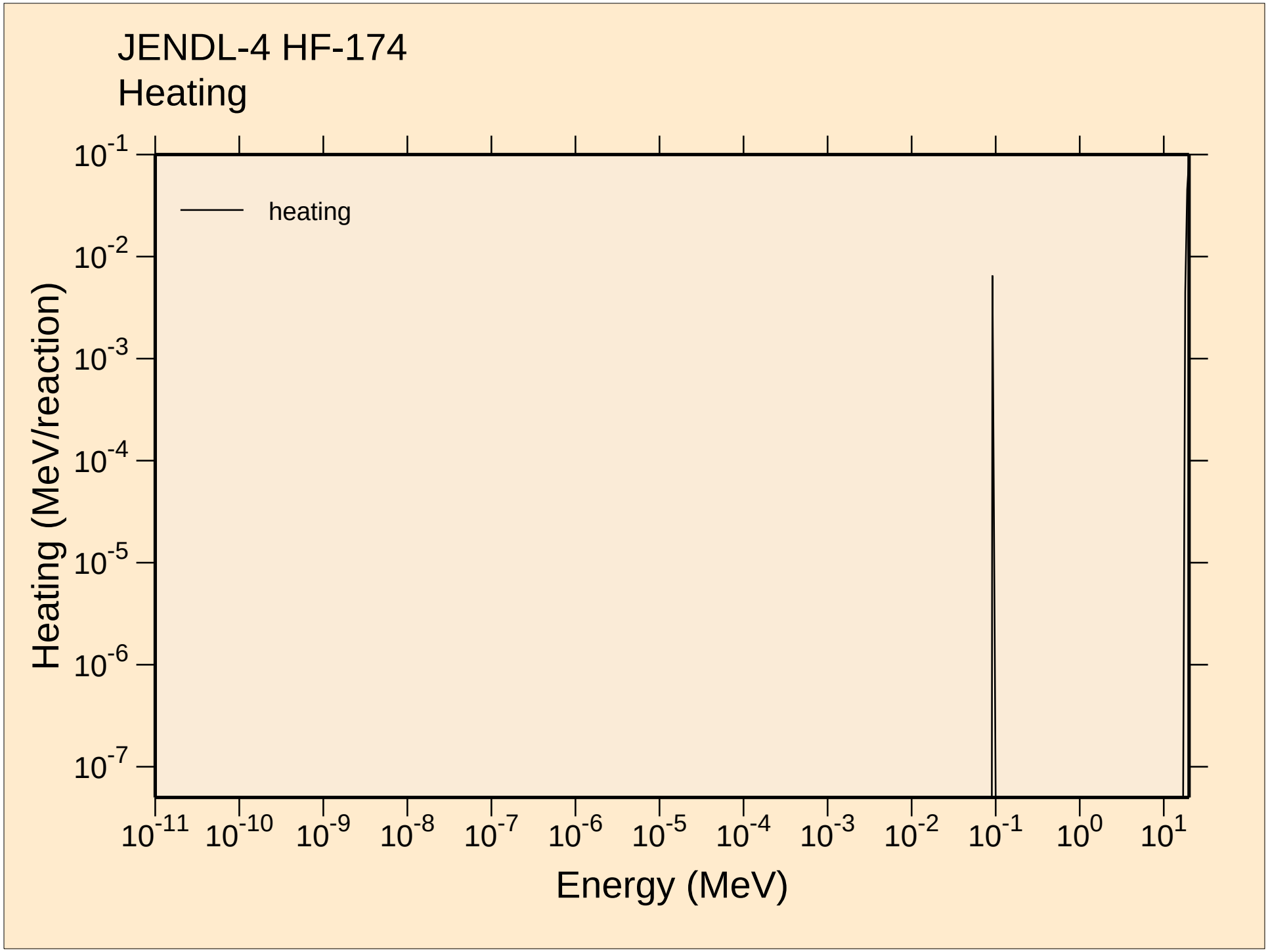
JENDL-4 HF-174
Heating
heating
Heating (MeV/reaction)
Energy (MeV)
10-1
10-2
10-3
10-4
10-5
10-6
10-7
10-11
10-10
10-9
10-8
10-7
10-6
10-5
10-4
10-3
10-2
10-1
100
101

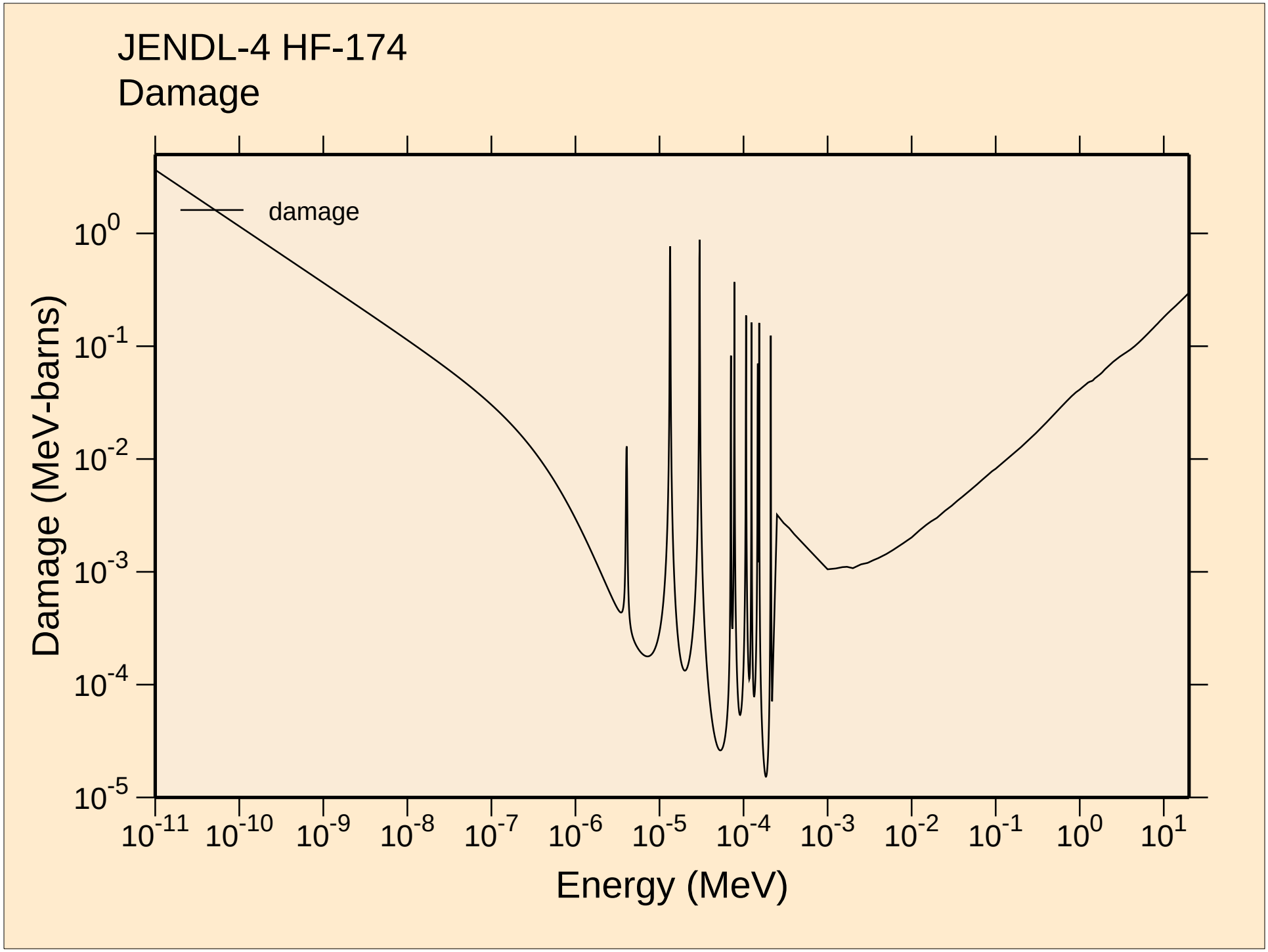
JENDL-4 HF-174
Damage
damage
Damage (MeV-barns)
Energy (MeV)
10^0
10^-1
10^-2
10^-3
10^-4
10^-5
10^-11
10^-10
10^-9
10^-8
10^-7
10^-6
10^-5
10^-4
10^-3
10^-2
10^-1
10^0
10^1

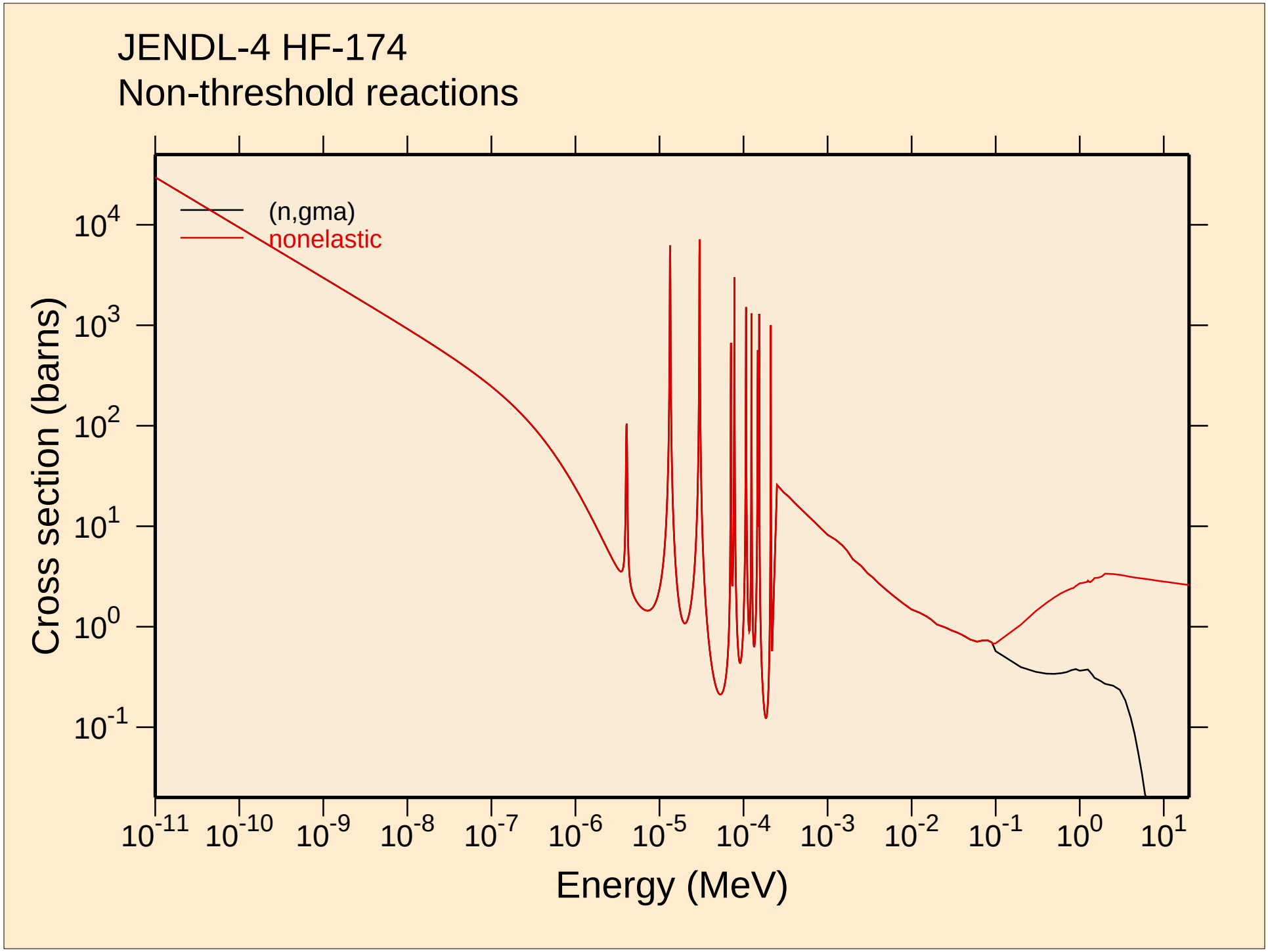
JENDL-4 HF-174
Non-threshold reactions
(n,gma)
nonelastic
Cross section (barns)
Energy (MeV)
10^4
10^3
10^2
10^1
10^0
10^-1
10^-11
10^-10
10^-9
10^-8
10^-7
10^-6
10^-5
10^-4
10^-3
10^-2
10^-1
10^0
10^1

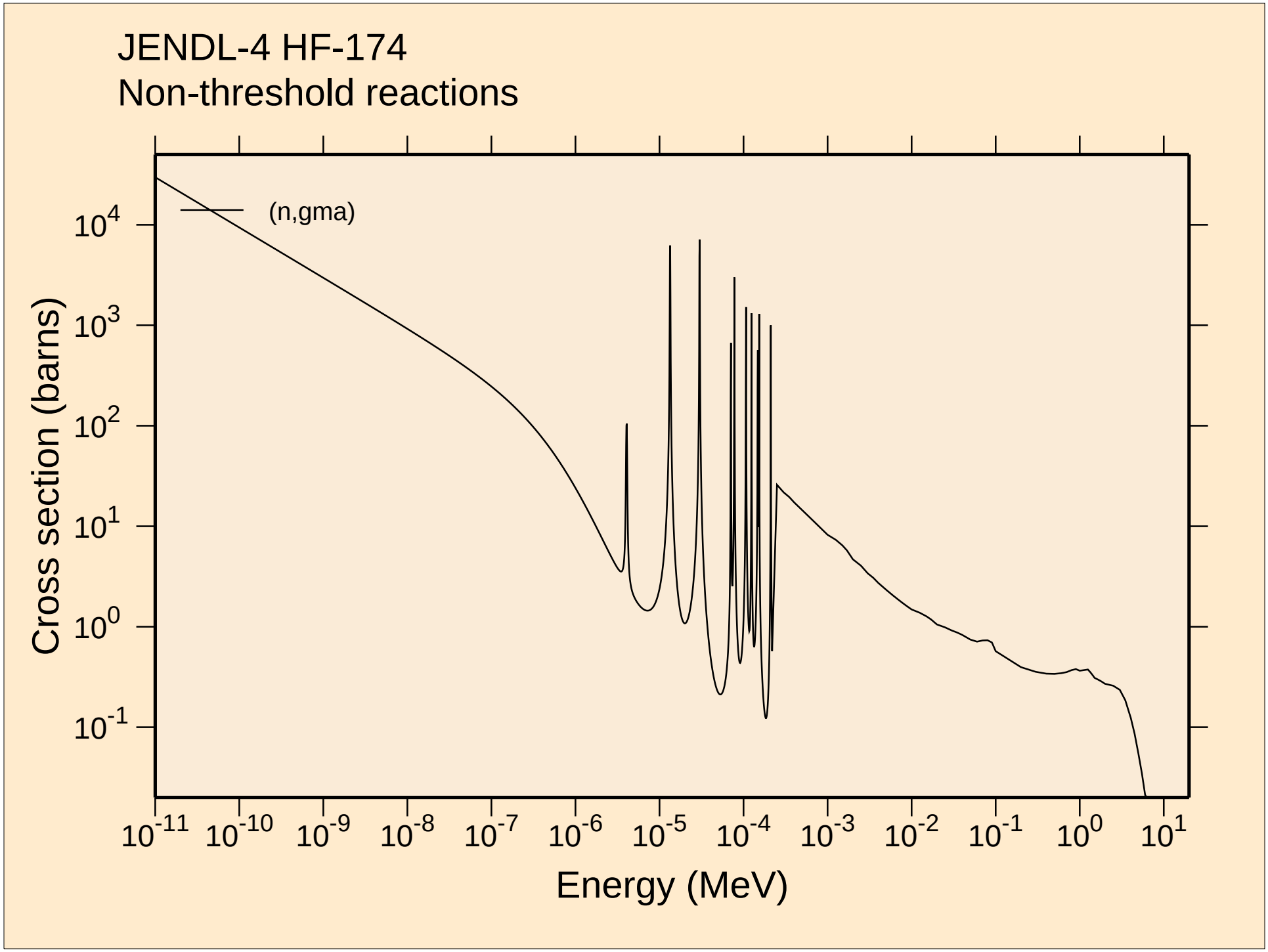
JENDL-4 HF-174
Non-threshold reactions
(n,gma)
Cross section (barns)
Energy (MeV)
10^4
10^3
10^2
10^1
10^0
10^-1
10^-11
10^-10
10^-9
10^-8
10^-7
10^-6
10^-5
10^-4
10^-3
10^-2
10^-1
10^0
10^1

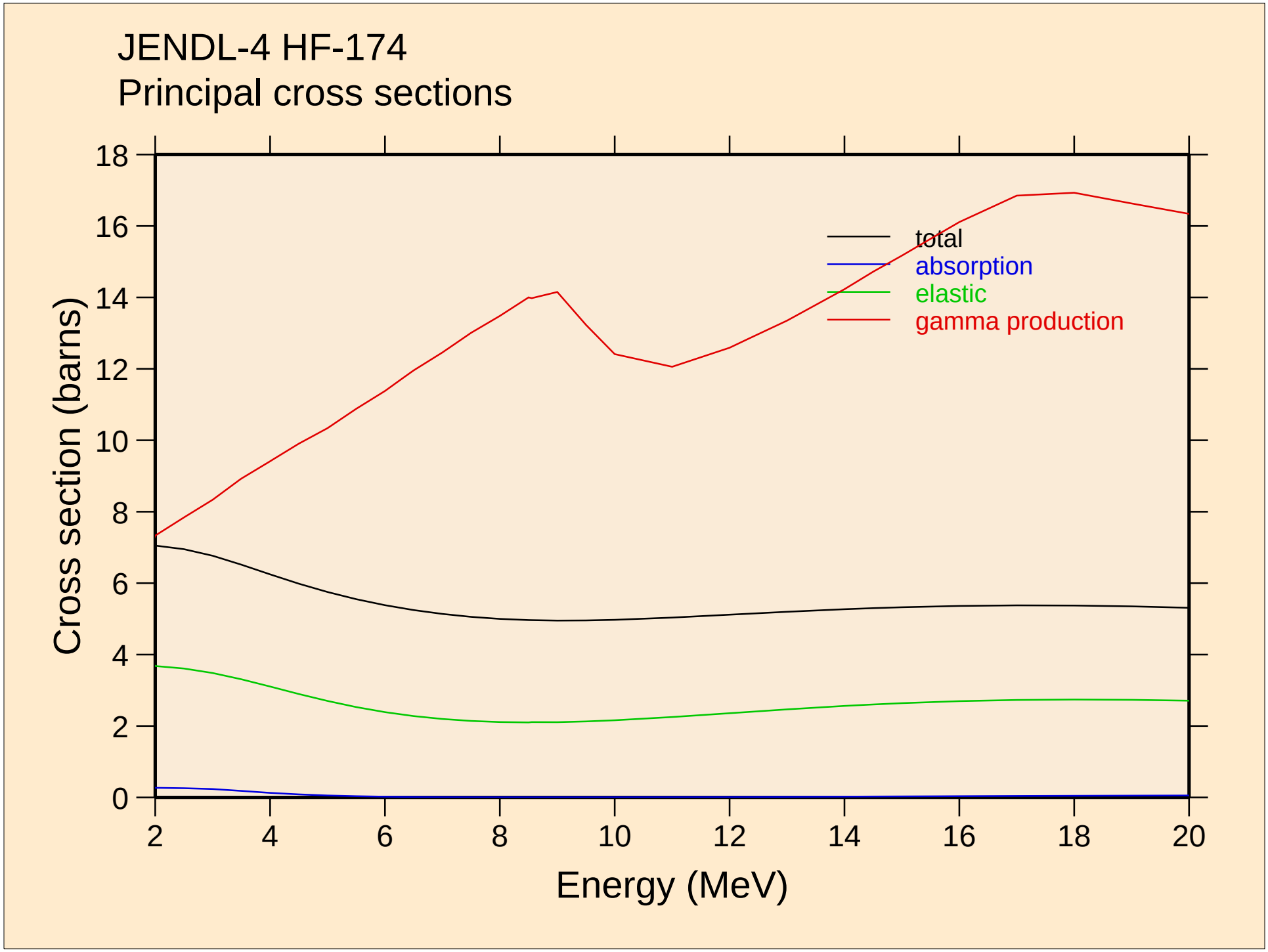
JENDL-4 HF-174
Principal cross sections
Cross section (barns)
Energy (MeV)
total
absorption
elastic
gamma production
0
2
4
6
8
10
12
14
16
18
2
4
6
8
10
12
14
16
18
20

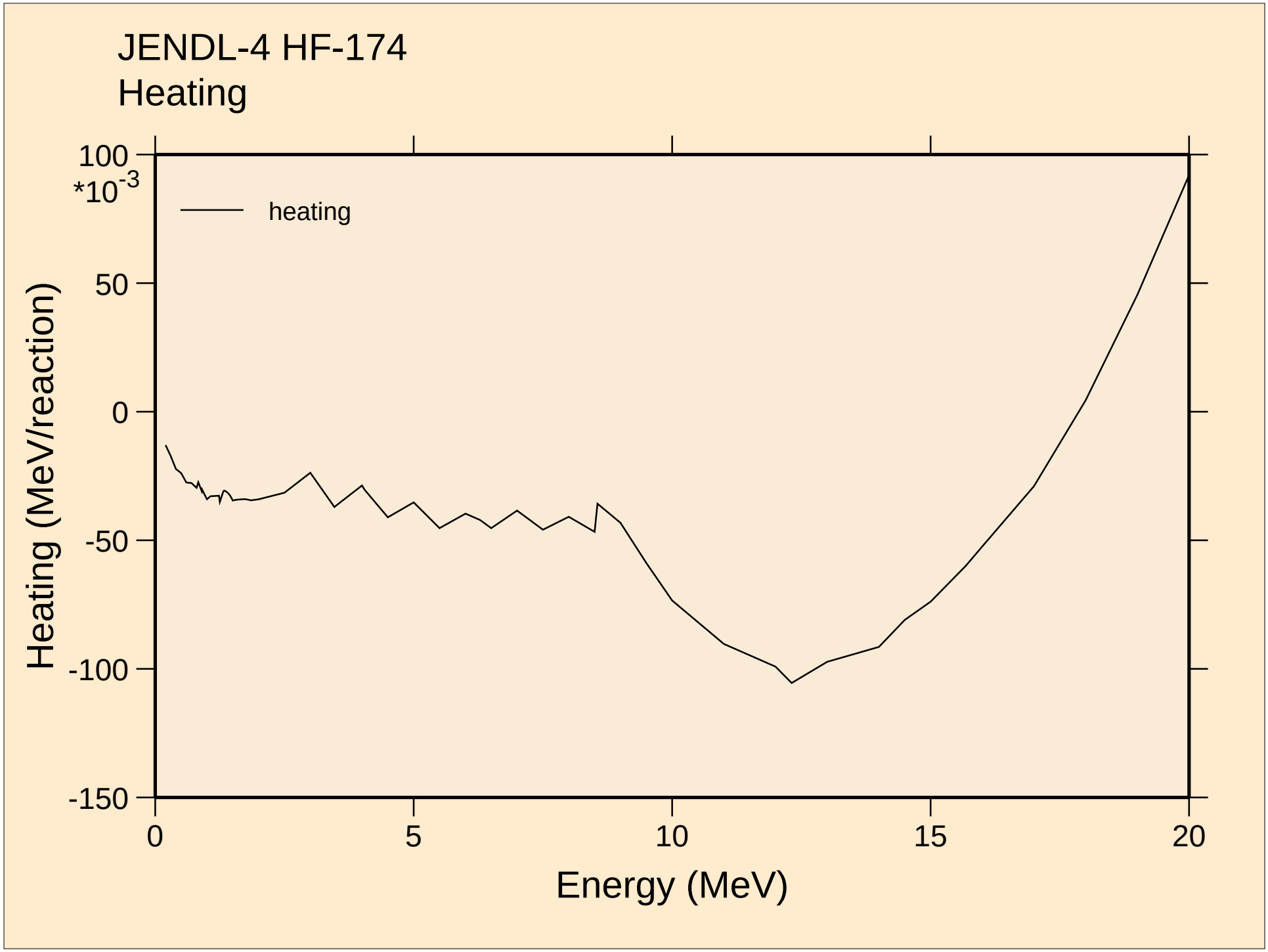
JENDL-4 HF-174
Heating
heating
100
*10-3
50
0
-50
-100
-150
Heating (MeV/reaction)
0
5
10
15
20
Energy (MeV)

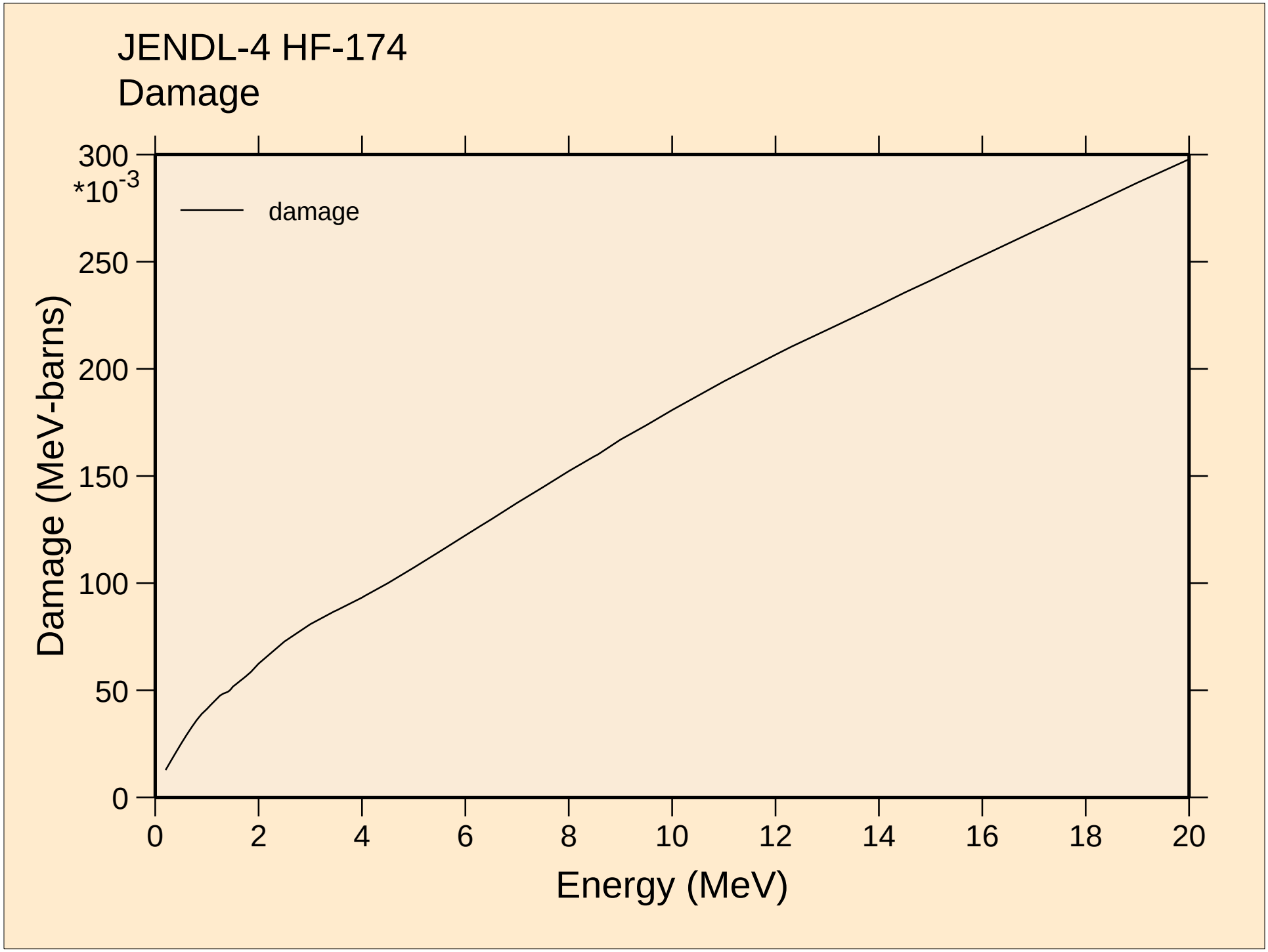
JENDL-4 HF-174
Damage
damage
Damage (MeV-barns)
*10^-3
300
250
200
150
100
50
0
0
2
4
6
8
10
12
14
16
18
20
Energy (MeV)

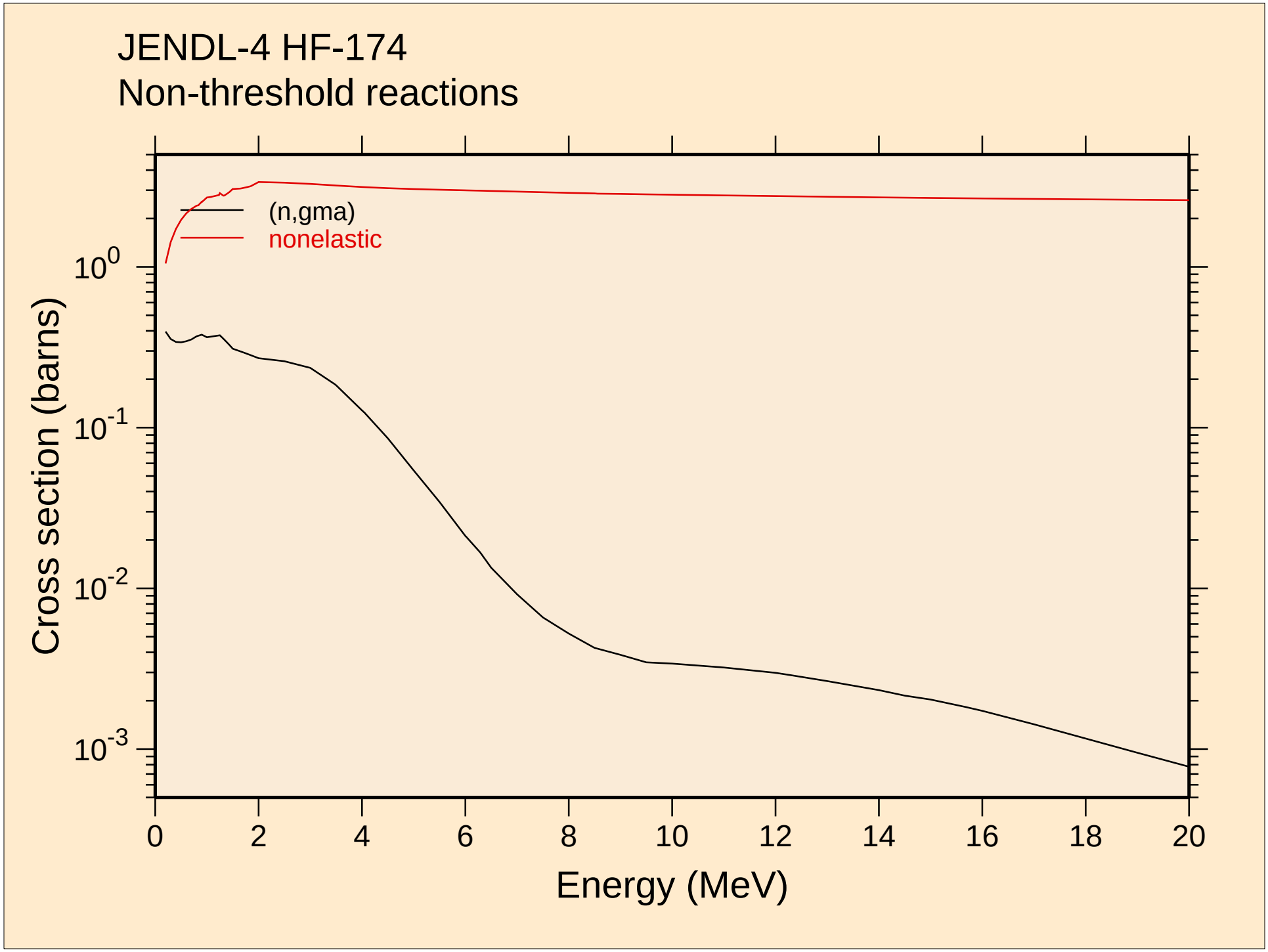
JENDL-4 HF-174
Non-threshold reactions
(n,gma)
nonelastic
Cross section (barns)
10^{0}
10^{-1}
10^{-2}
10^{-3}
0
2
4
6
8
10
12
14
16
18
20
Energy (MeV)

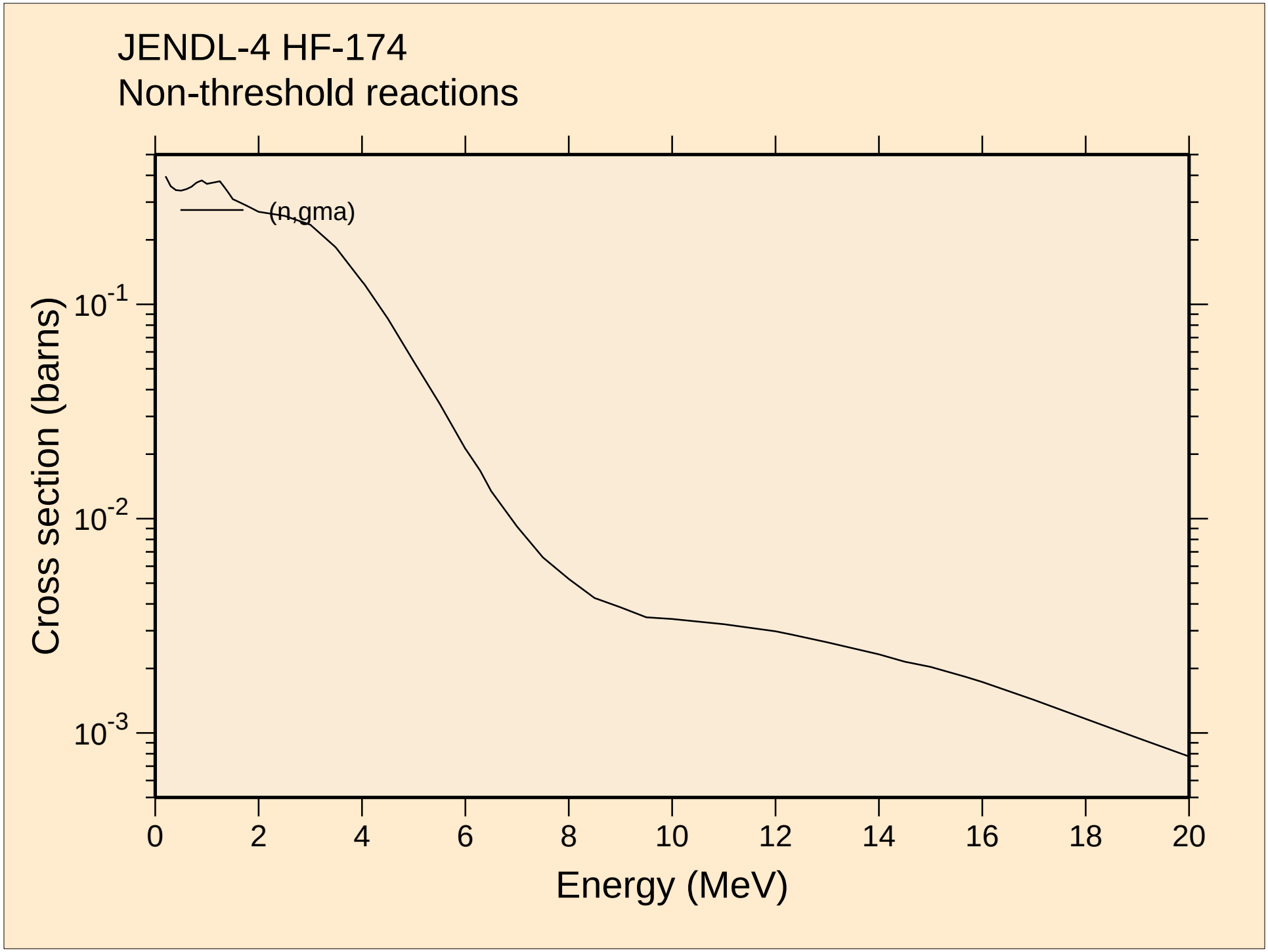
JENDL-4 HF-174
Non-threshold reactions
(n,gma)
Cross section (barns)
10-1
10-2
10-3
0
2
4
6
8
10
12
14
16
18
20
Energy (MeV)

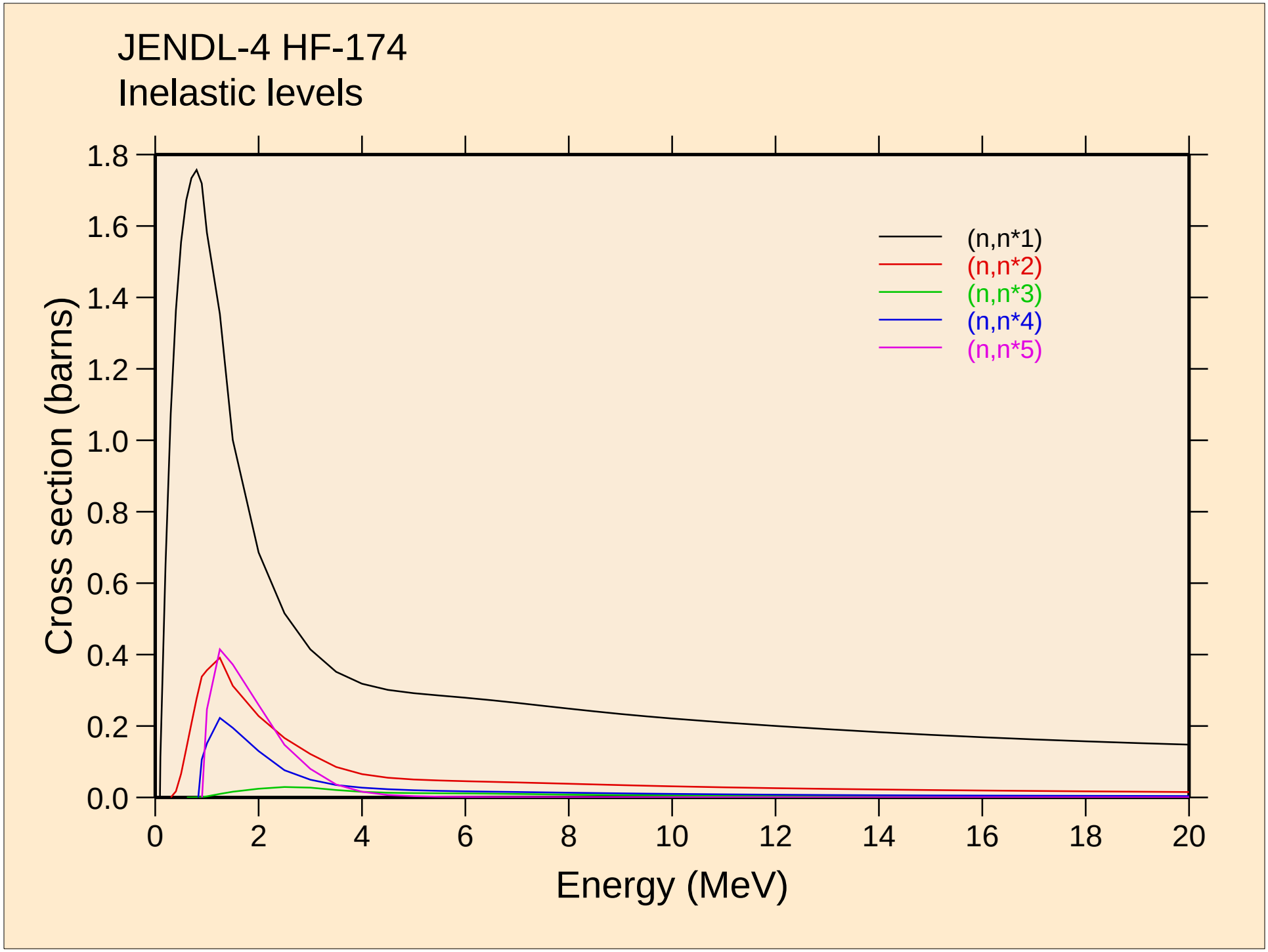
JENDL-4 HF-174
Inelastic levels
Cross section (barns)
Energy (MeV)
(n,n*1)
(n,n*2)
(n,n*3)
(n,n*4)
(n,n*5)
0.0
0.2
0.4
0.6
0.8
1.0
1.2
1.4
1.6
1.8
0
2
4
6
8
10
12
14
16
18
20

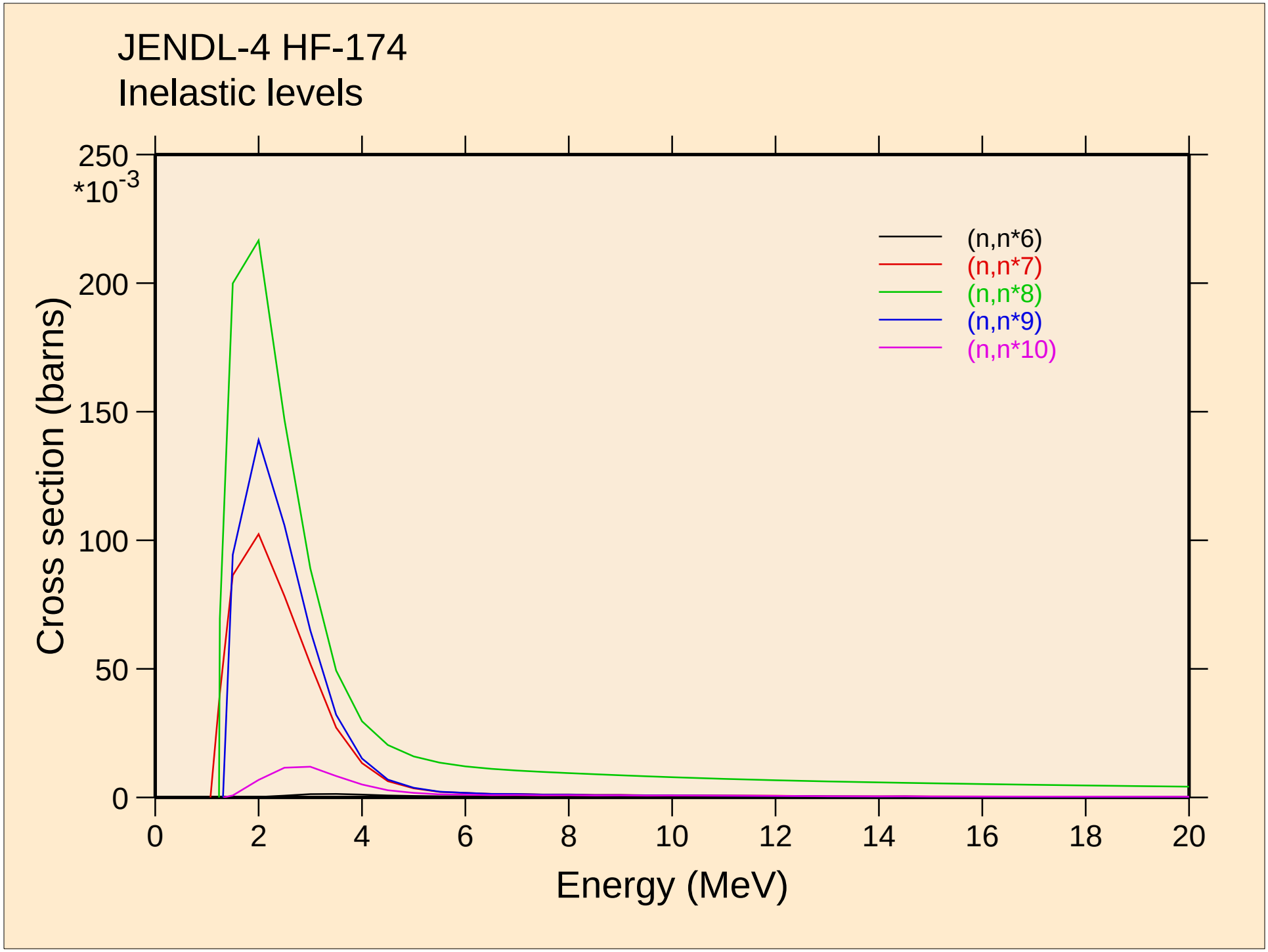
JENDL-4 HF-174
Inelastic levels
Cross section (barns)
*10^-3
250
200
150
100
50
0
0
2
4
6
8
10
12
14
16
18
20
Energy (MeV)
(n,n*6)
(n,n*7)
(n,n*8)
(n,n*9)
(n,n*10)

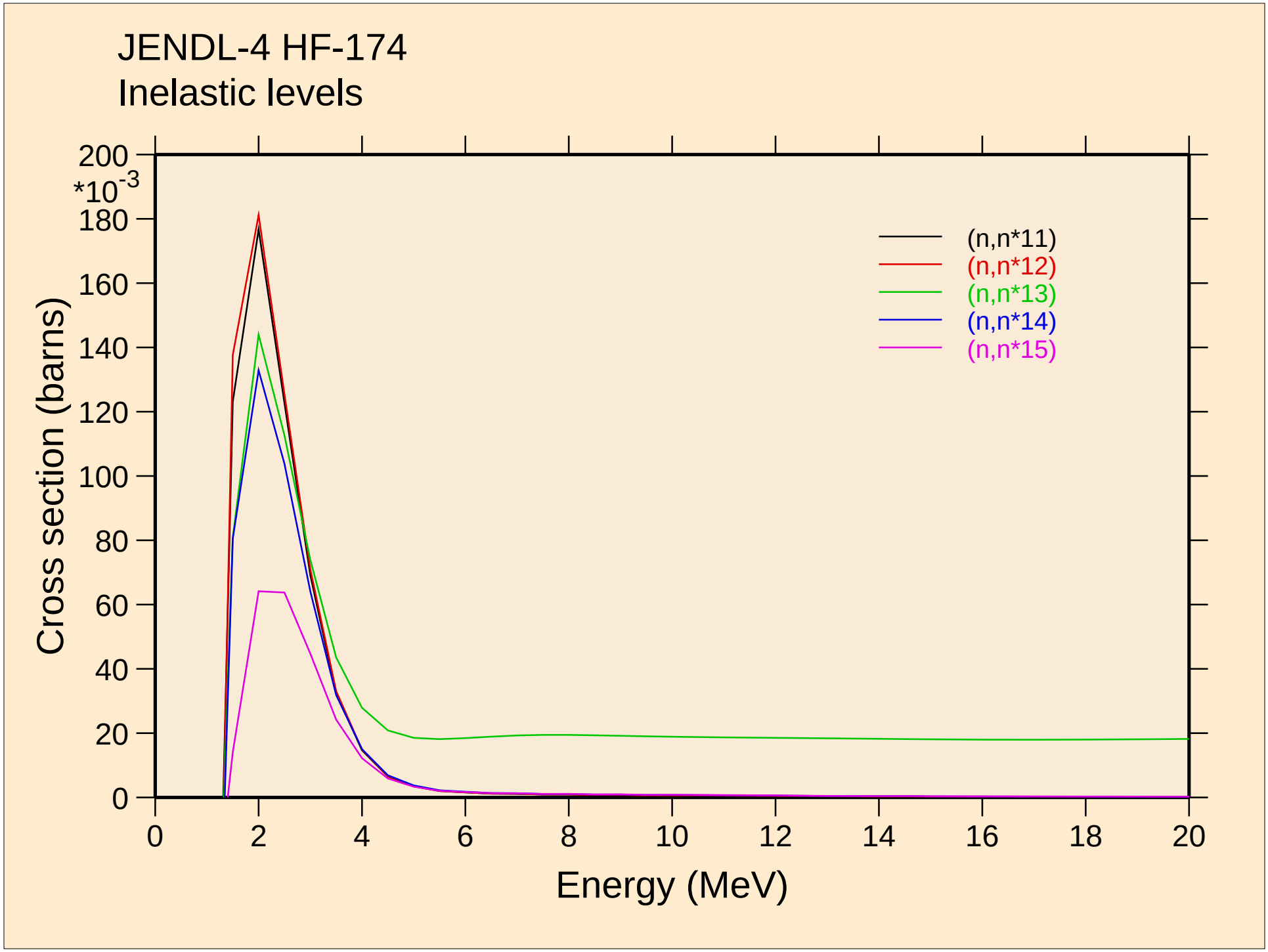
JENDL-4 HF-174
Inelastic levels
Cross section (barns)
*10^-3
200
180
160
140
120
100
80
60
40
20
0
0
2
4
6
8
10
12
14
16
18
20
Energy (MeV)
(n,n*11)
(n,n*12)
(n,n*13)
(n,n*14)
(n,n*15)

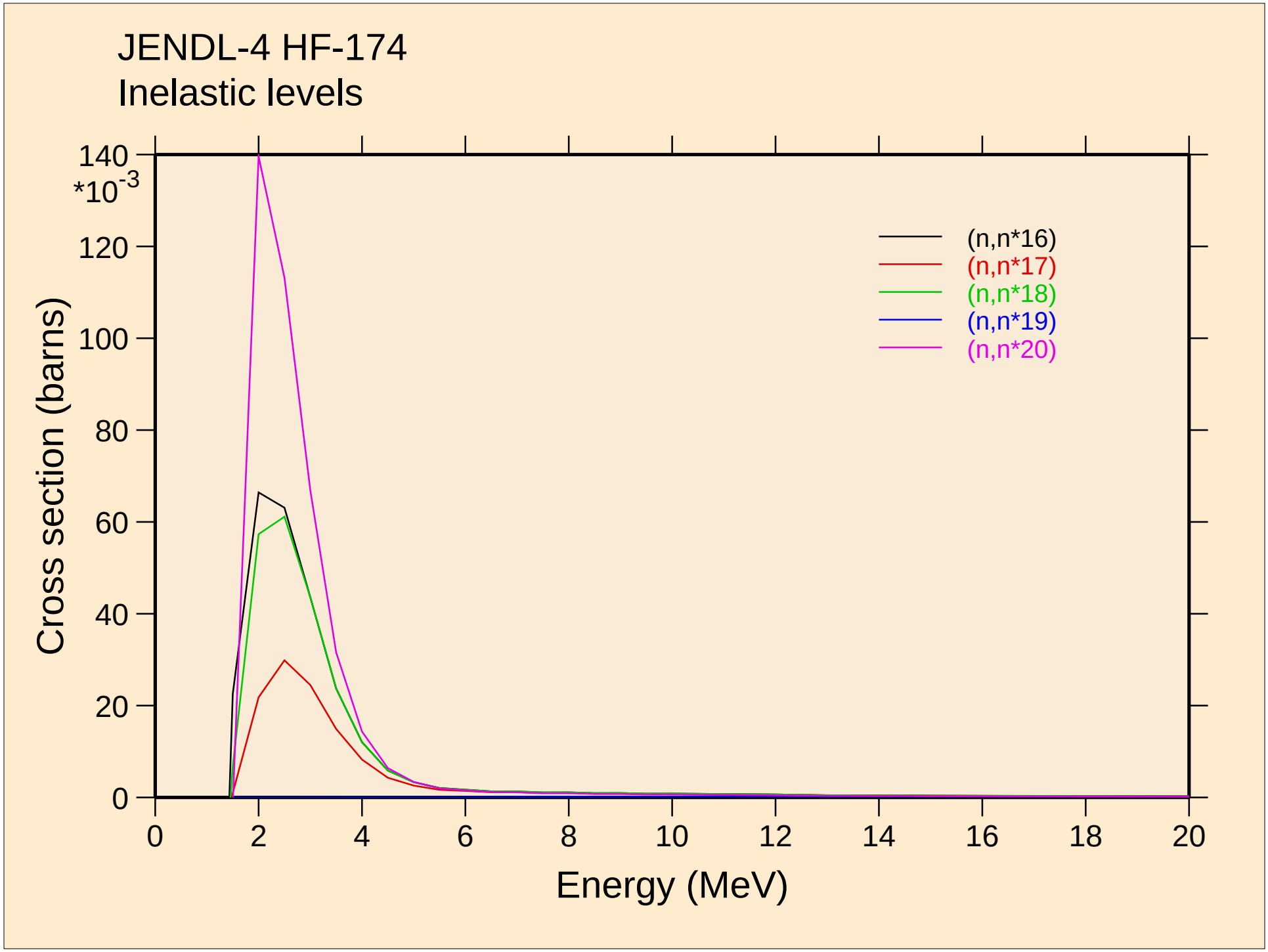
JENDL-4 HF-174
Inelastic levels
Cross section (barns)
*10^-3
140
120
100
80
60
40
20
0
0
2
4
6
8
10
12
14
16
18
20
Energy (MeV)
(n,n*16)
(n,n*17)
(n,n*18)
(n,n*19)
(n,n*20)

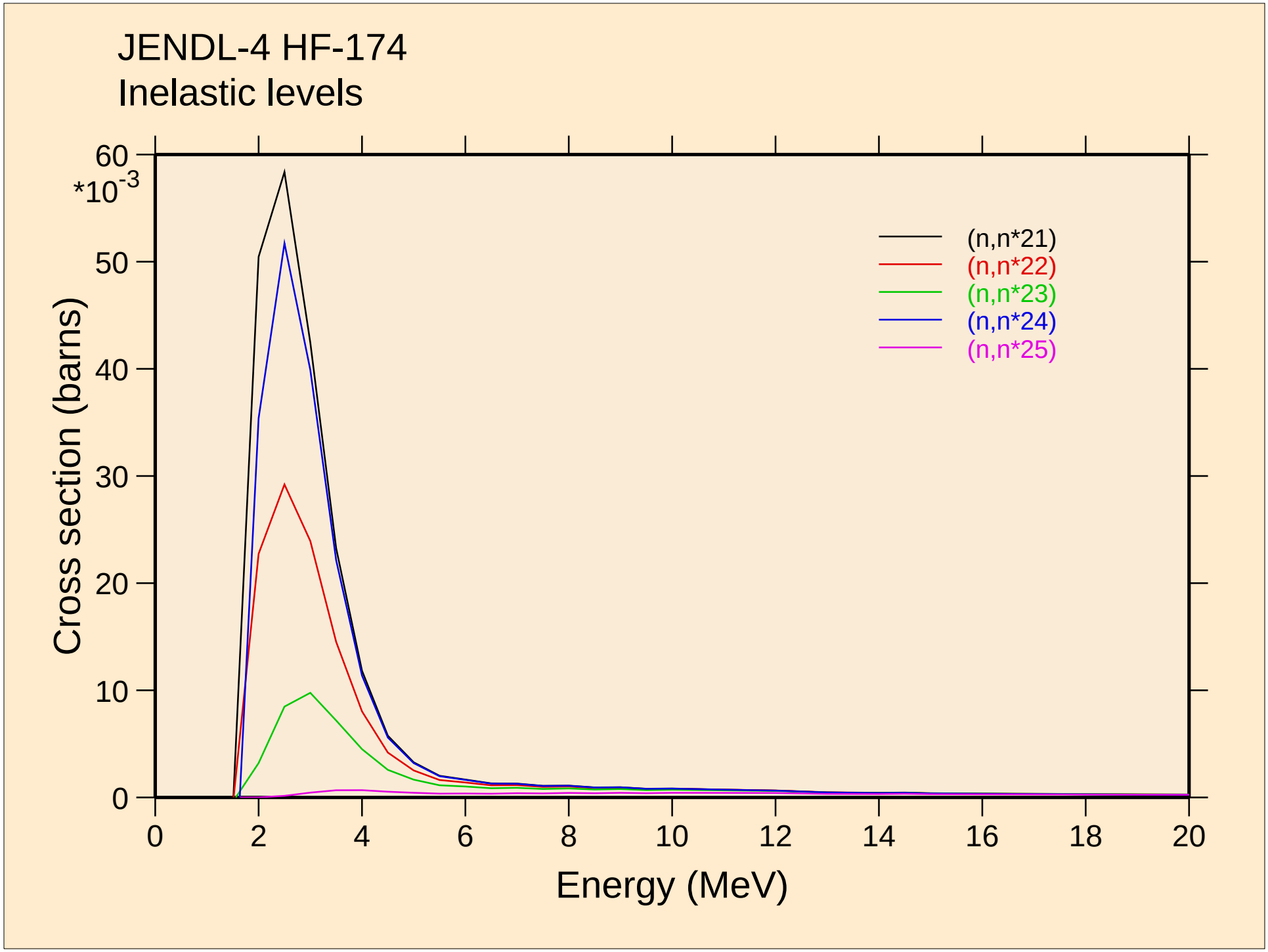
JENDL-4 HF-174
Inelastic levels
Cross section (barns)
*10-3
60
50
40
30
20
10
0
0
2
4
6
8
10
12
14
16
18
20
Energy (MeV)
(n,n*21)
(n,n*22)
(n,n*23)
(n,n*24)
(n,n*25)

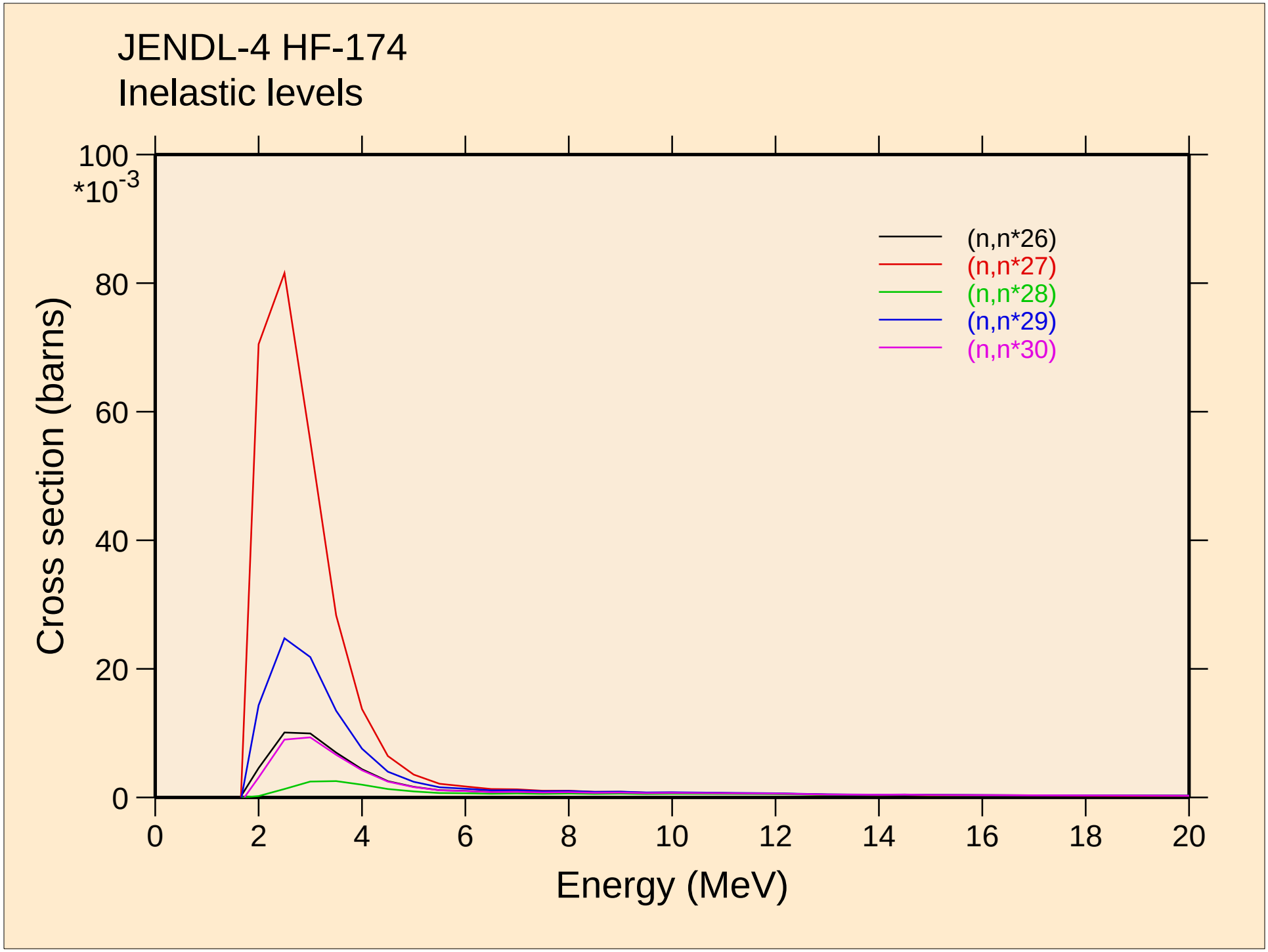
JENDL-4 HF-174
Inelastic levels
100
*10-3
80
60
40
20
0
Cross section (barns)
0
2
4
6
8
10
12
14
16
18
20
Energy (MeV)
(n,n*26)
(n,n*27)
(n,n*28)
(n,n*29)
(n,n*30)

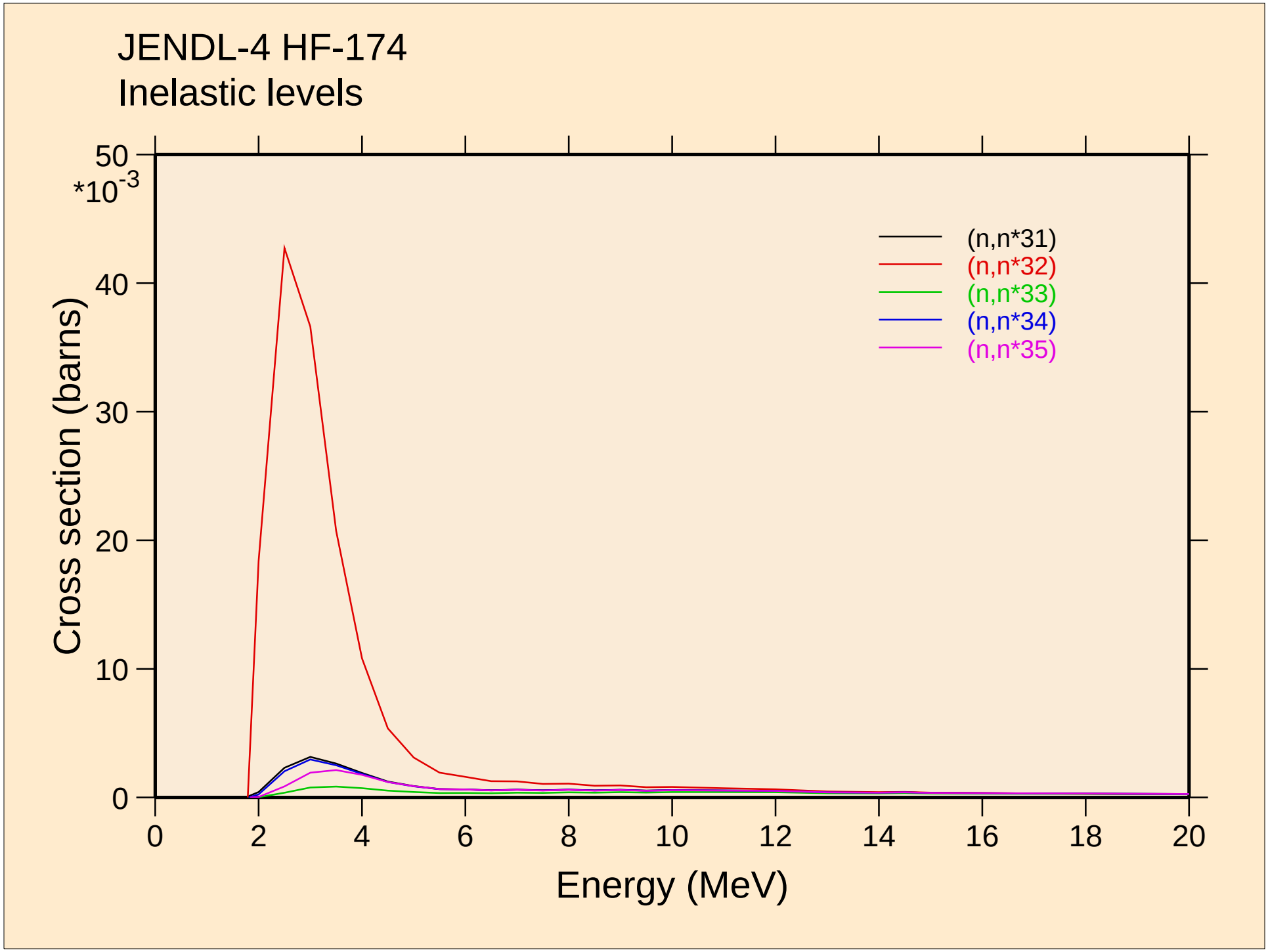
JENDL-4 HF-174
Inelastic levels
Cross section (barns)
*10^-3
50
40
30
20
10
0
0
2
4
6
8
10
12
14
16
18
20
Energy (MeV)
(n,n*31)
(n,n*32)
(n,n*33)
(n,n*34)
(n,n*35)

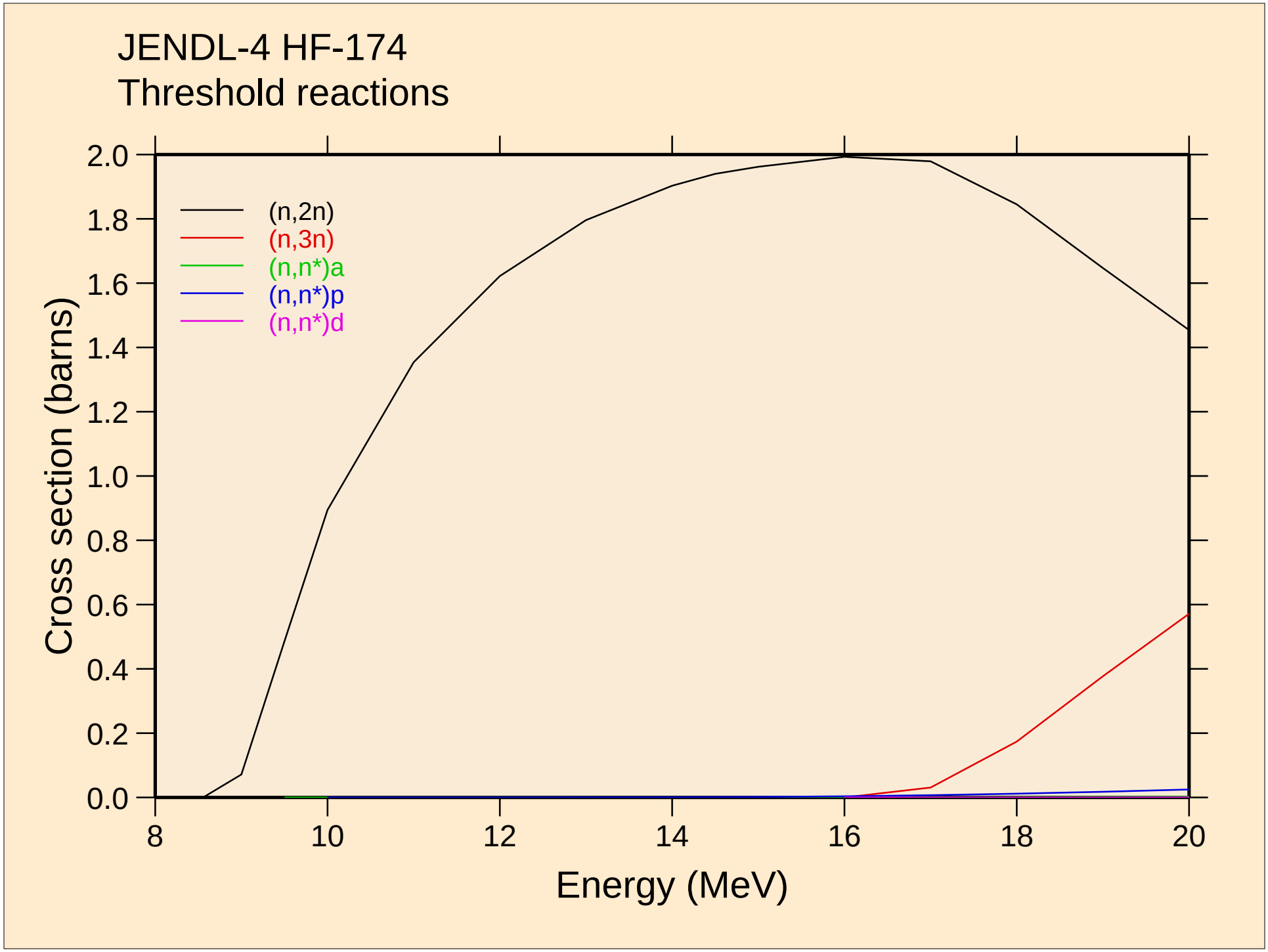
JENDL-4 HF-174
Threshold reactions
(n,2n)
(n,3n)
(n,n*)a
(n,n*)p
(n,n*)d
Cross section (barns)
Energy (MeV)
0.0
0.2
0.4
0.6
0.8
1.0
1.2
1.4
1.6
1.8
2.0
8
10
12
14
16
18
20

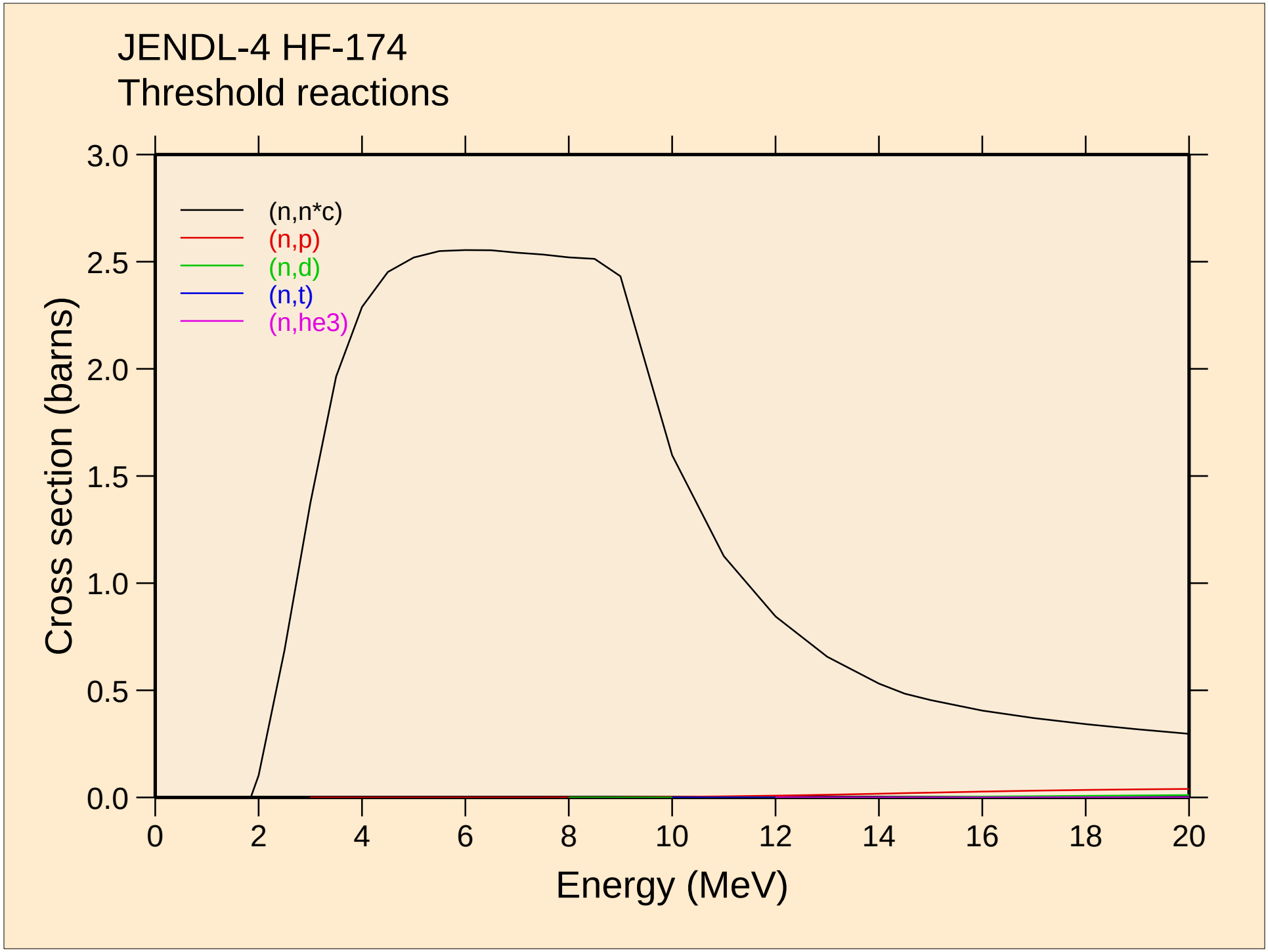
JENDL-4 HF-174
Threshold reactions
(n,n*c)
(n,p)
(n,d)
(n,t)
(n,he3)
Cross section (barns)
Energy (MeV)
0.0
0.5
1.0
1.5
2.0
2.5
3.0
0
2
4
6
8
10
12
14
16
18
20

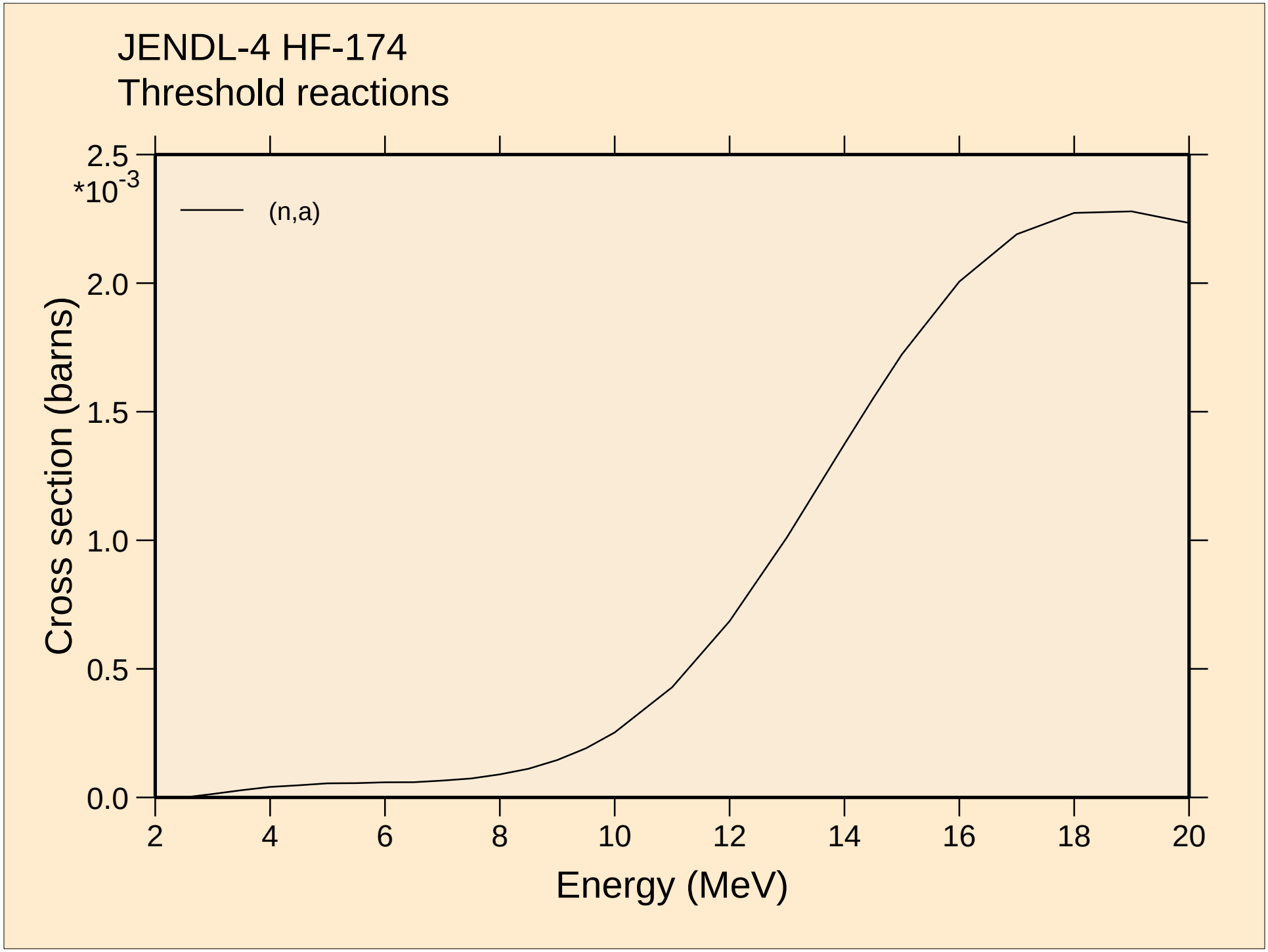
JENDL-4 HF-174
Threshold reactions
(n,a)
Cross section (barns)
*10-3
2.5
2.0
1.5
1.0
0.5
0.0
2
4
6
8
10
12
14
16
18
20
Energy (MeV)

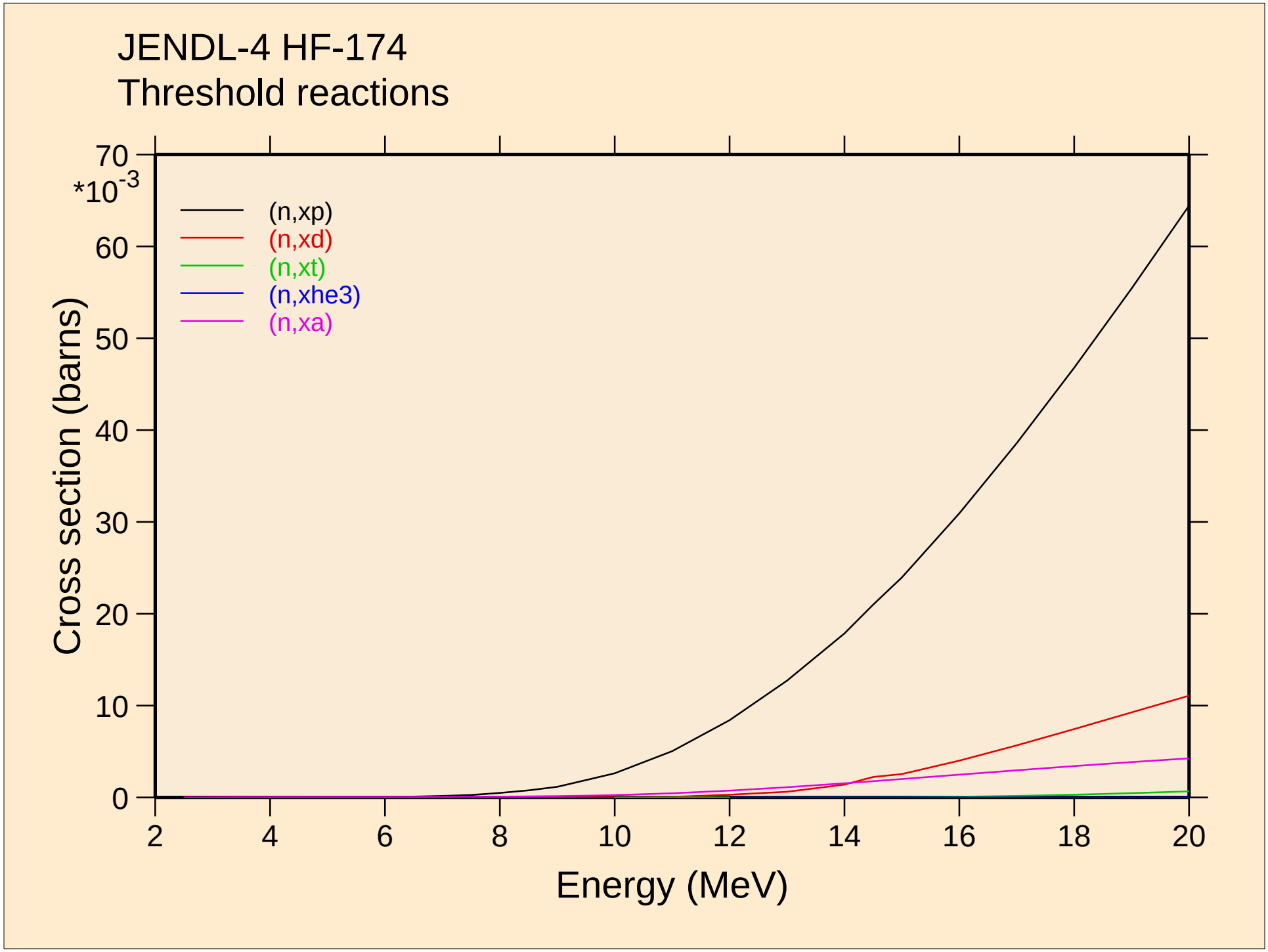
JENDL-4 HF-174
Threshold reactions
*10-3
70
60
50
40
30
20
10
0
Cross section (barns)
(n,xp)
(n,xd)
(n,xt)
(n,xhe3)
(n,xa)
2
4
6
8
10
12
14
16
18
20
Energy (MeV)

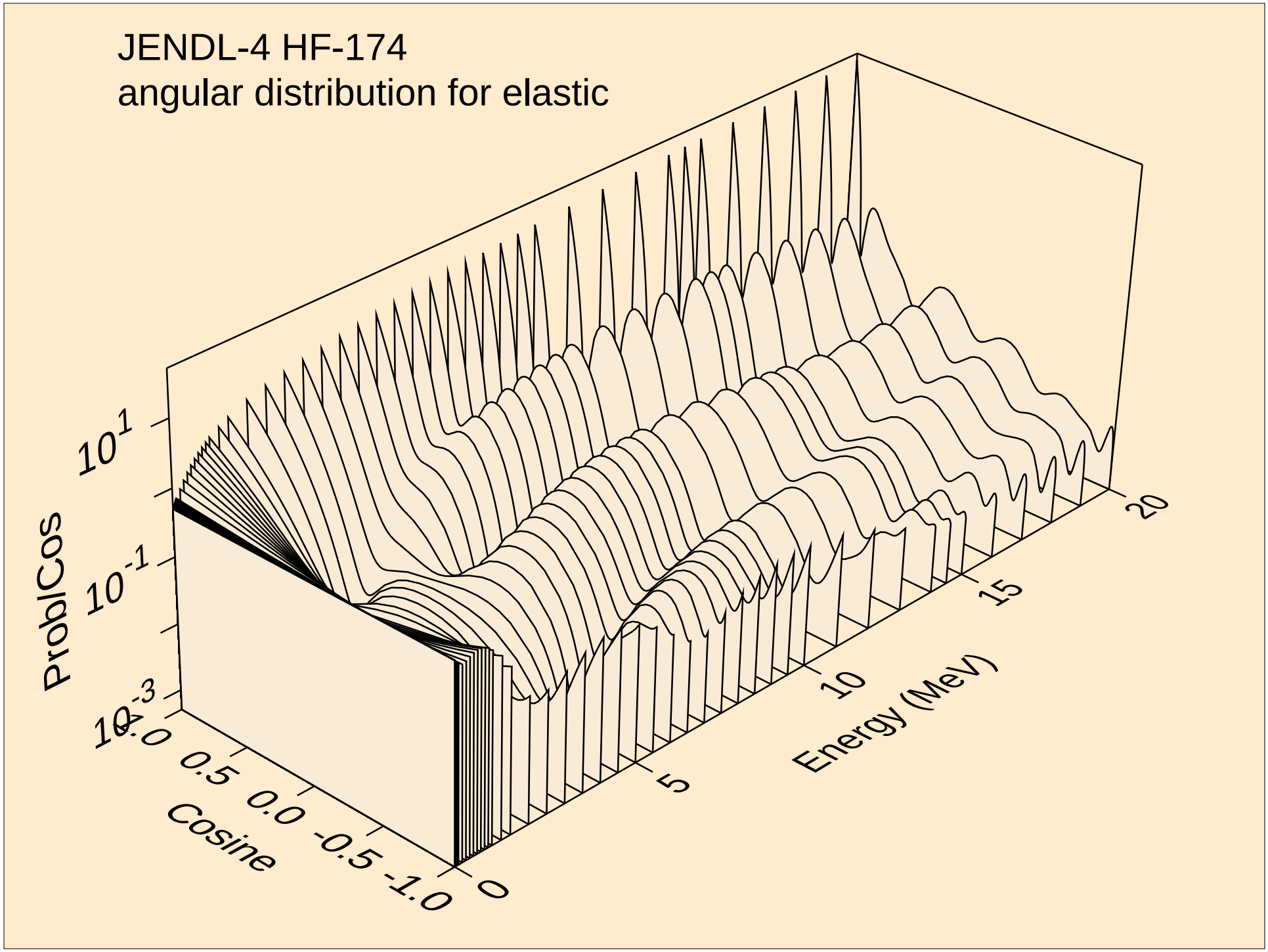
JENDL-4 HF-174
angular distribution for elastic
ProblCos
10^{1}
10^{-1}
10^{-3}
1.0
0.5
0.0
-0.5
-1.0
Cosine
0
5
10
15
20
Energy (MeV)

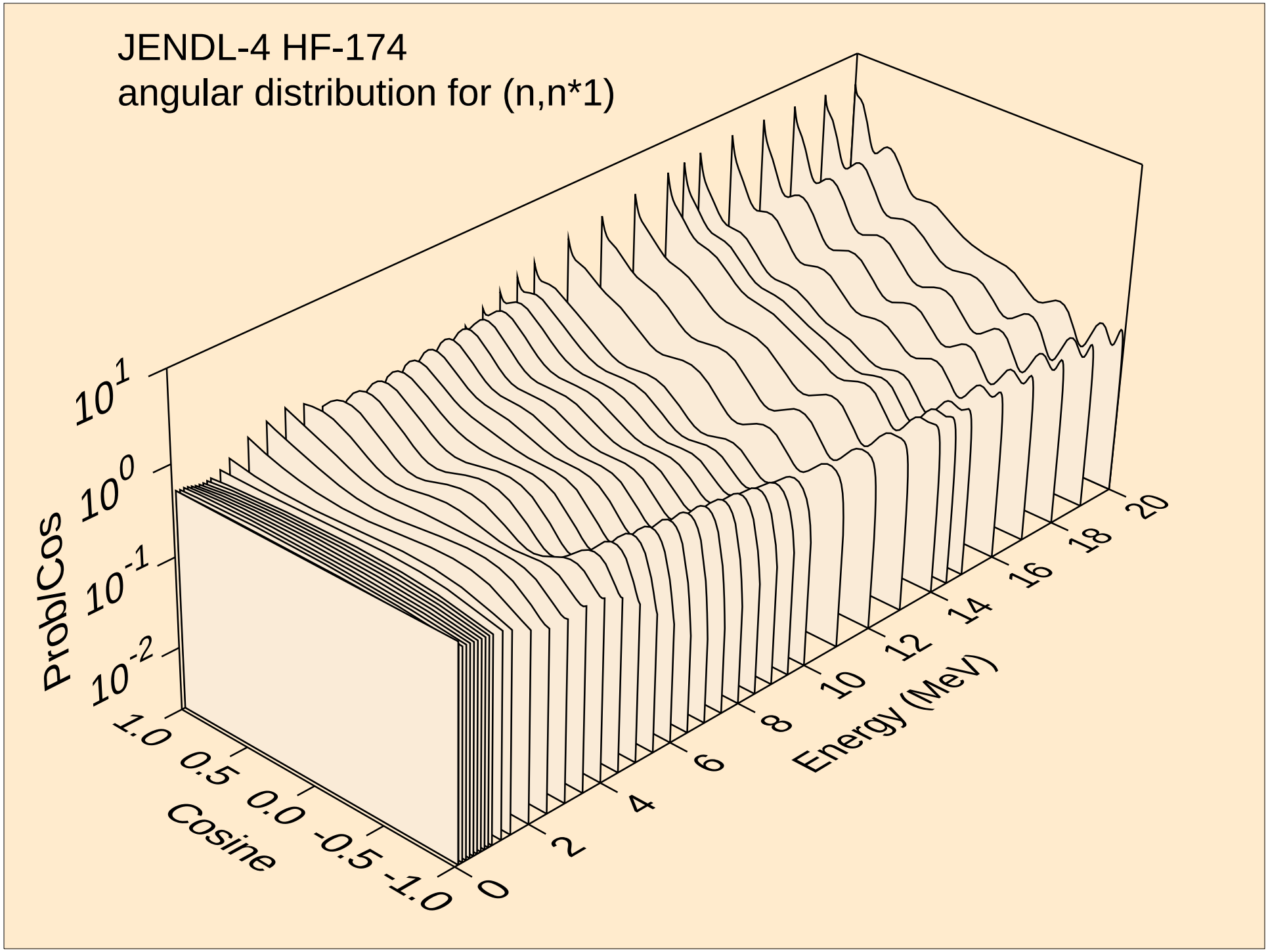
JENDL-4 HF-174
angular distribution for (n,n*1)
ProbCos
10^{1}
10^{0}
10^{-1}
10^{-2}
Cosine
1.0
0.5
0.0
-0.5
-1.0
Energy (MeV)
0
2
4
6
8
10
12
14
16
18
20

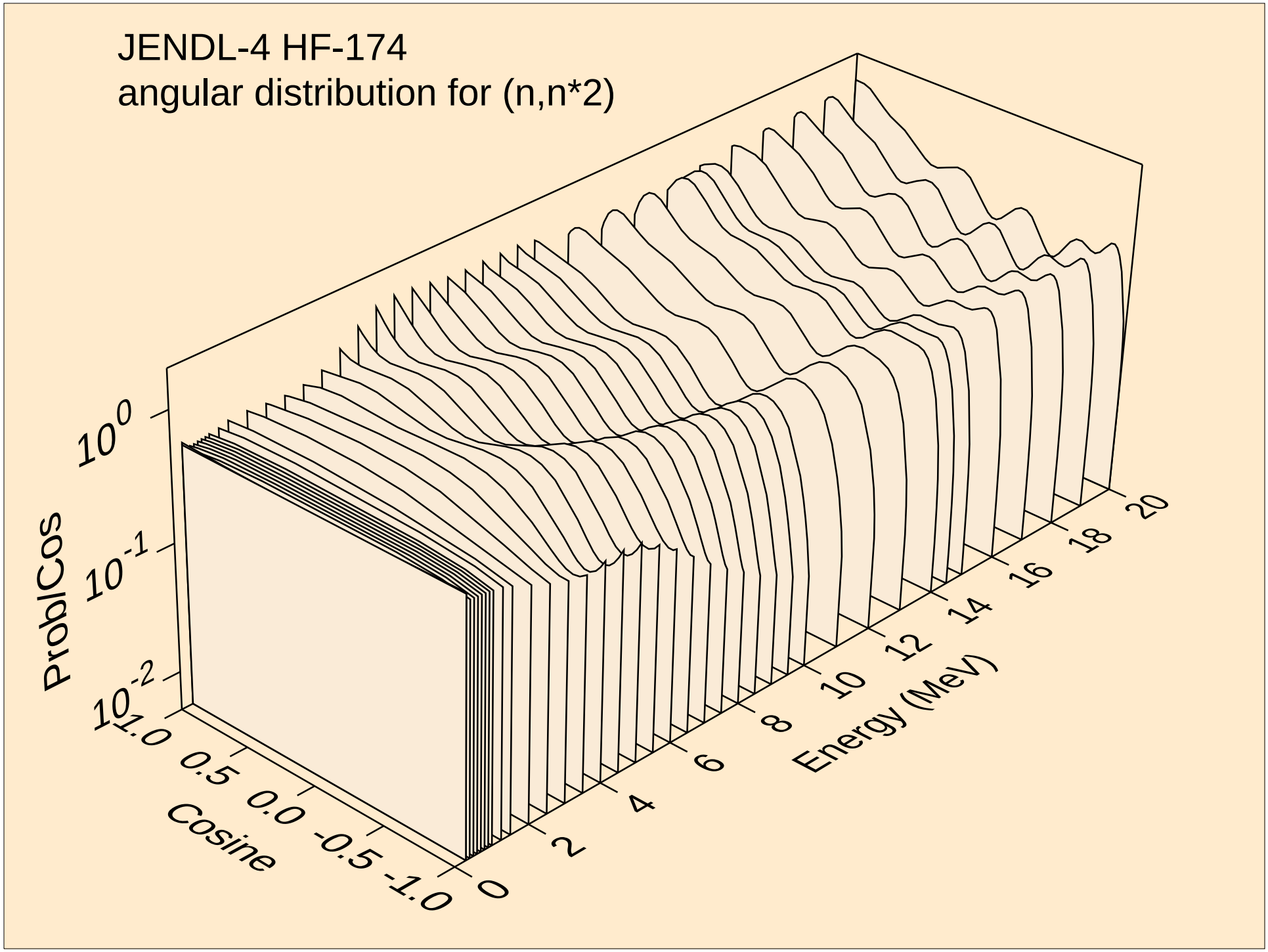
JENDL-4 HF-174
angular distribution for (n,n*2)
ProbCos
10^{0}
10^{-1}
10^{-2}
Cosine
1.0
0.5
0.0
-0.5
-1.0
Energy (MeV)
0
2
4
6
8
10
12
14
16
18
20

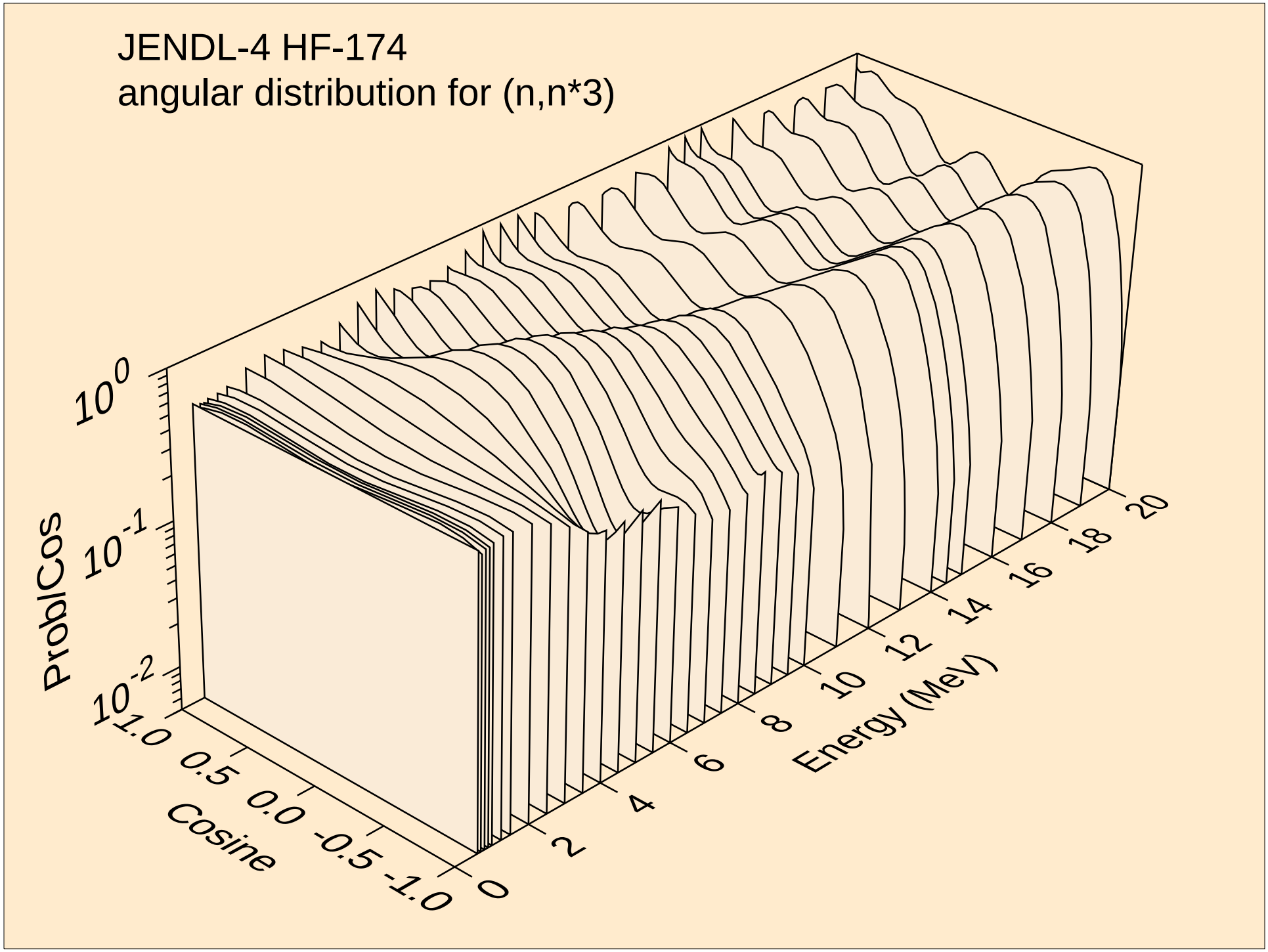
JENDL-4 HF-174
angular distribution for (n,n*3)
ProbCos
10^{0}
10^{-1}
10^{-2}
Cosine
1.0
0.5
0.0
-0.5
-1.0
Energy (MeV)
0
2
4
6
8
10
12
14
16
18
20

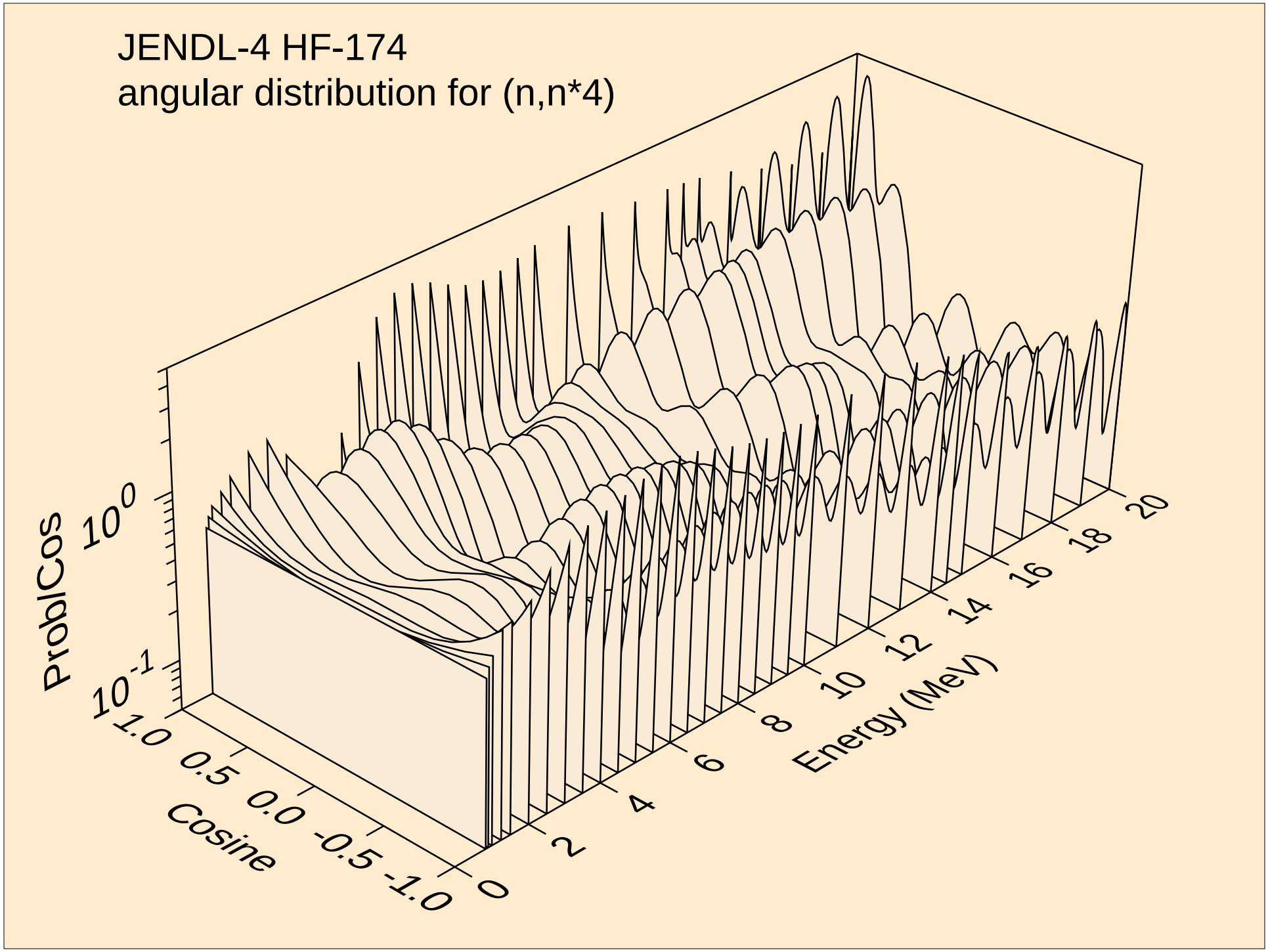
JENDL-4 HF-174
angular distribution for (n,n*4)
ProblCos
10^0
10^{-1}
1.0
0.5
0.0
-0.5
-1.0
Cosine
0
2
4
6
8
10
12
14
16
18
20
Energy (MeV)

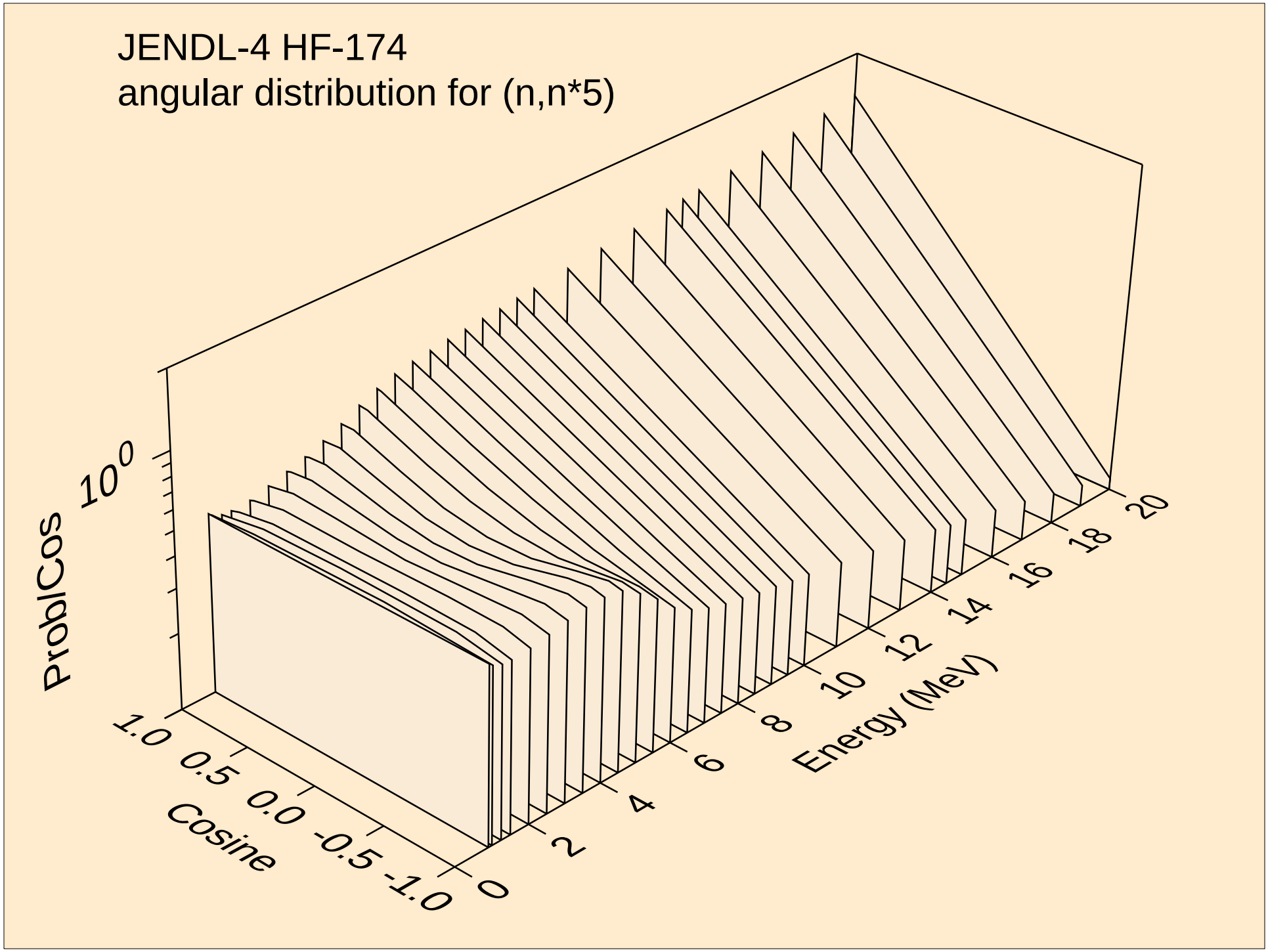
JENDL-4 HF-174
angular distribution for (n,n*5)
ProblCos
10^0
1.0
0.5
0.0
-0.5
-1.0
Cosine
0
2
4
6
8
10
12
14
16
18
20
Energy (MeV)

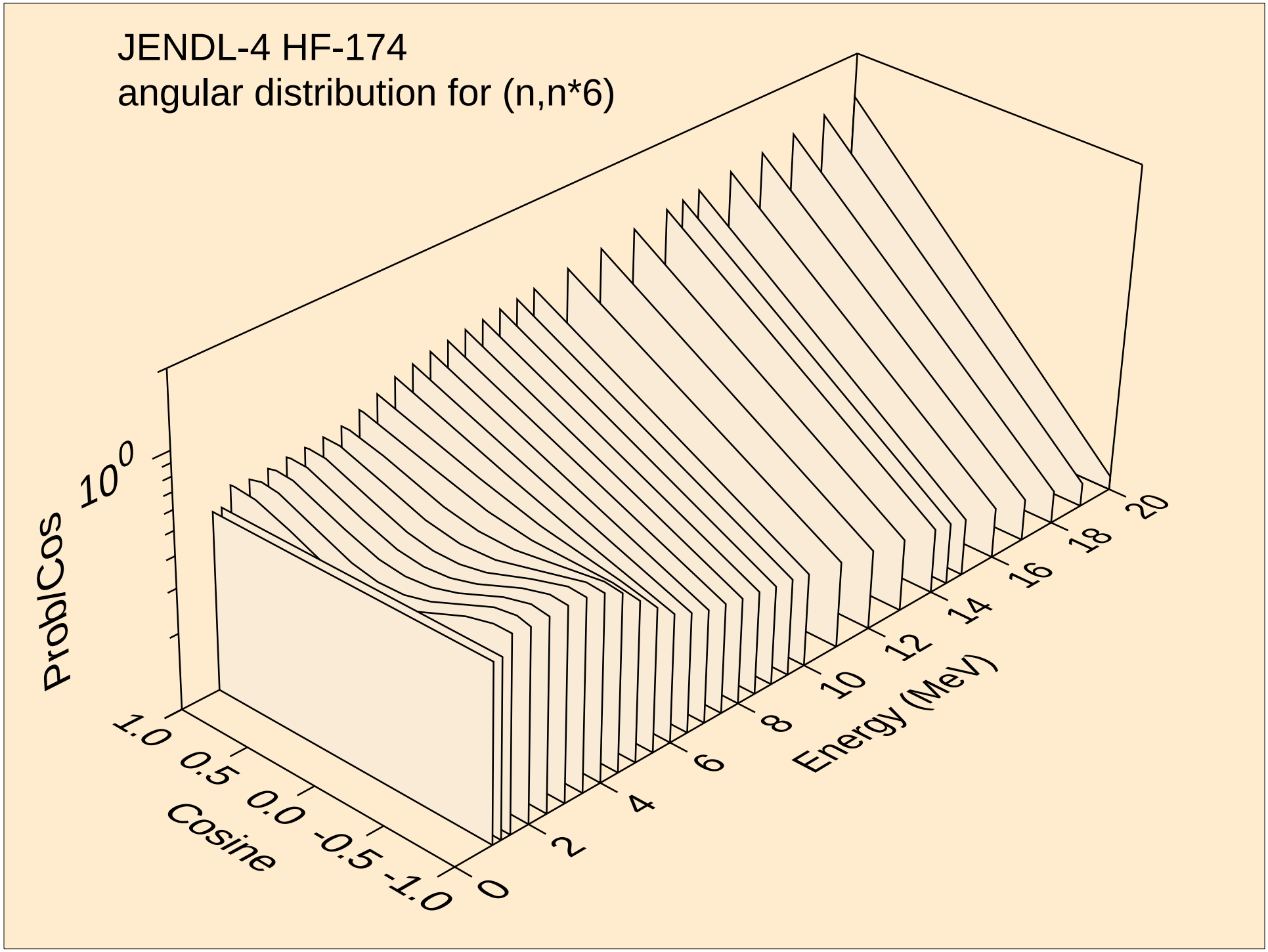
JENDL-4 HF-174
angular distribution for (n,n*6)
ProblCos
10^0
1.0
0.5
0.0
-0.5
-1.0
Cosine
0
2
4
6
8
10
12
14
16
18
20
Energy (MeV)

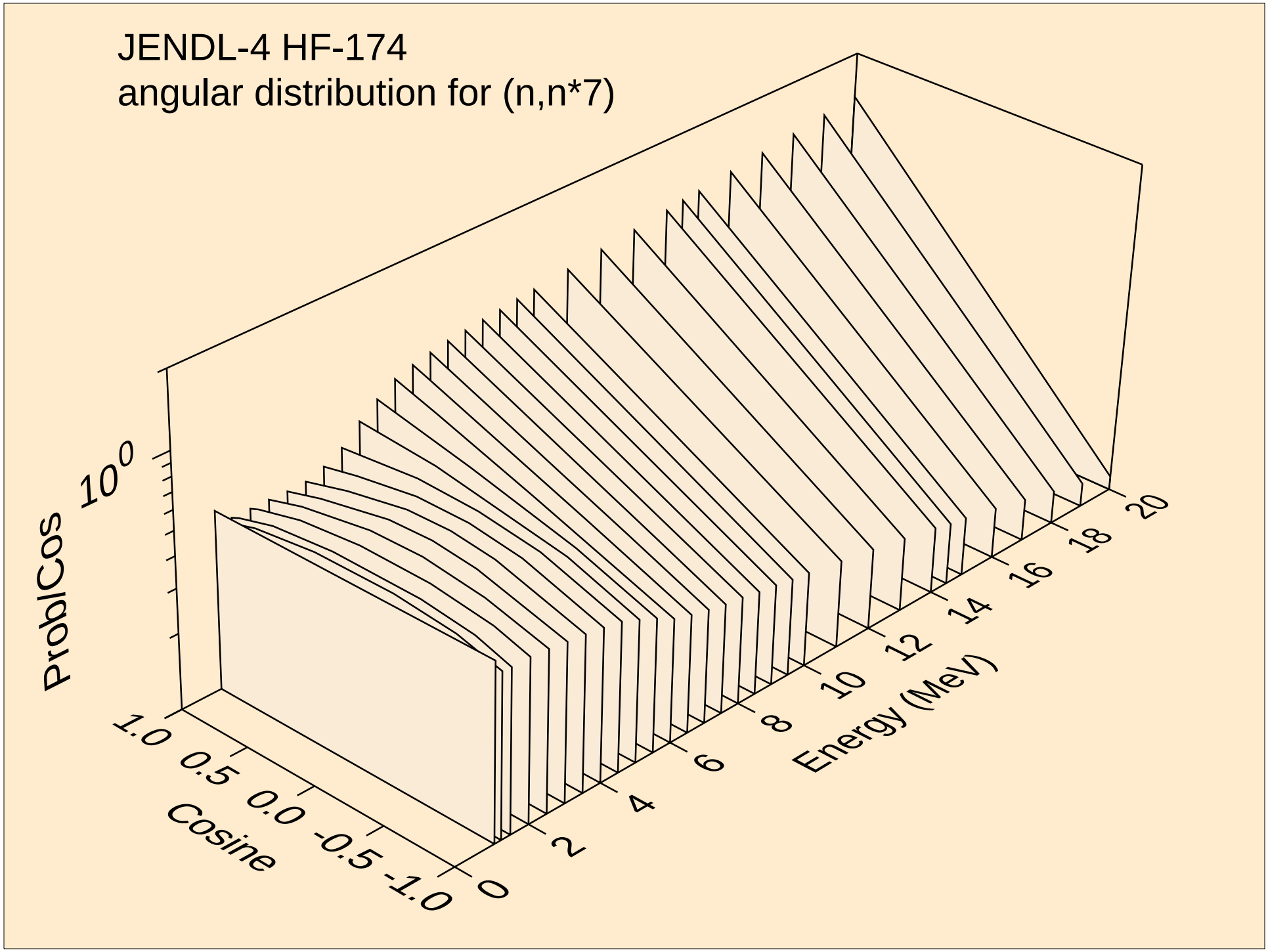
JENDL-4 HF-174
angular distribution for (n,n*7)
ProblCos
10^0
Cosine
1.0
0.5
0.0
-0.5
-1.0
Energy (MeV)
0
2
4
6
8
10
12
14
16
18
20

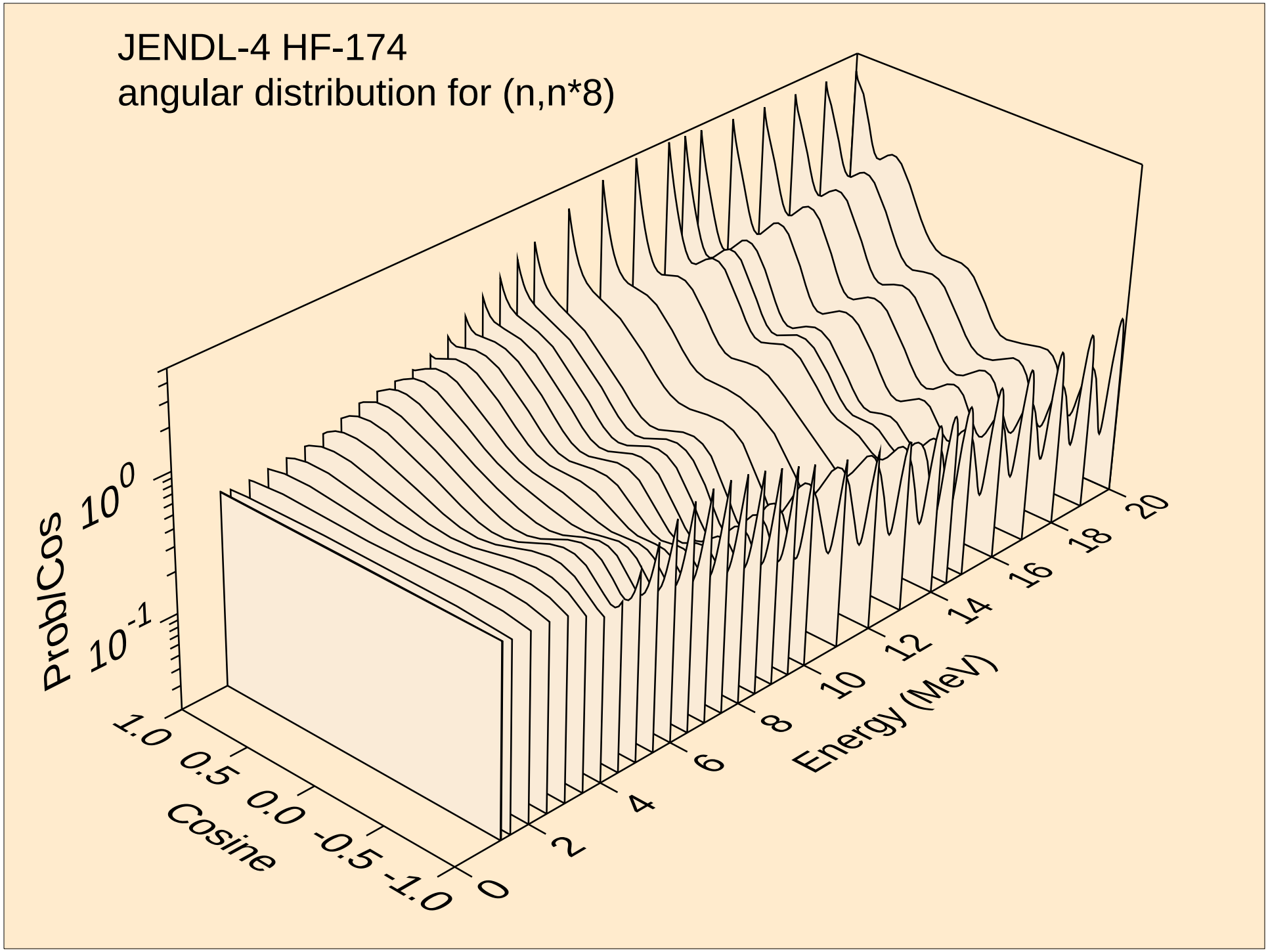
JENDL-4 HF-174
angular distribution for (n,n*8)
Prob/Cos
10^0
10^{-1}
1.0
0.5
0.0
-0.5
-1.0
Cosine
0
2
4
6
8
10
12
14
16
18
20
Energy (MeV)

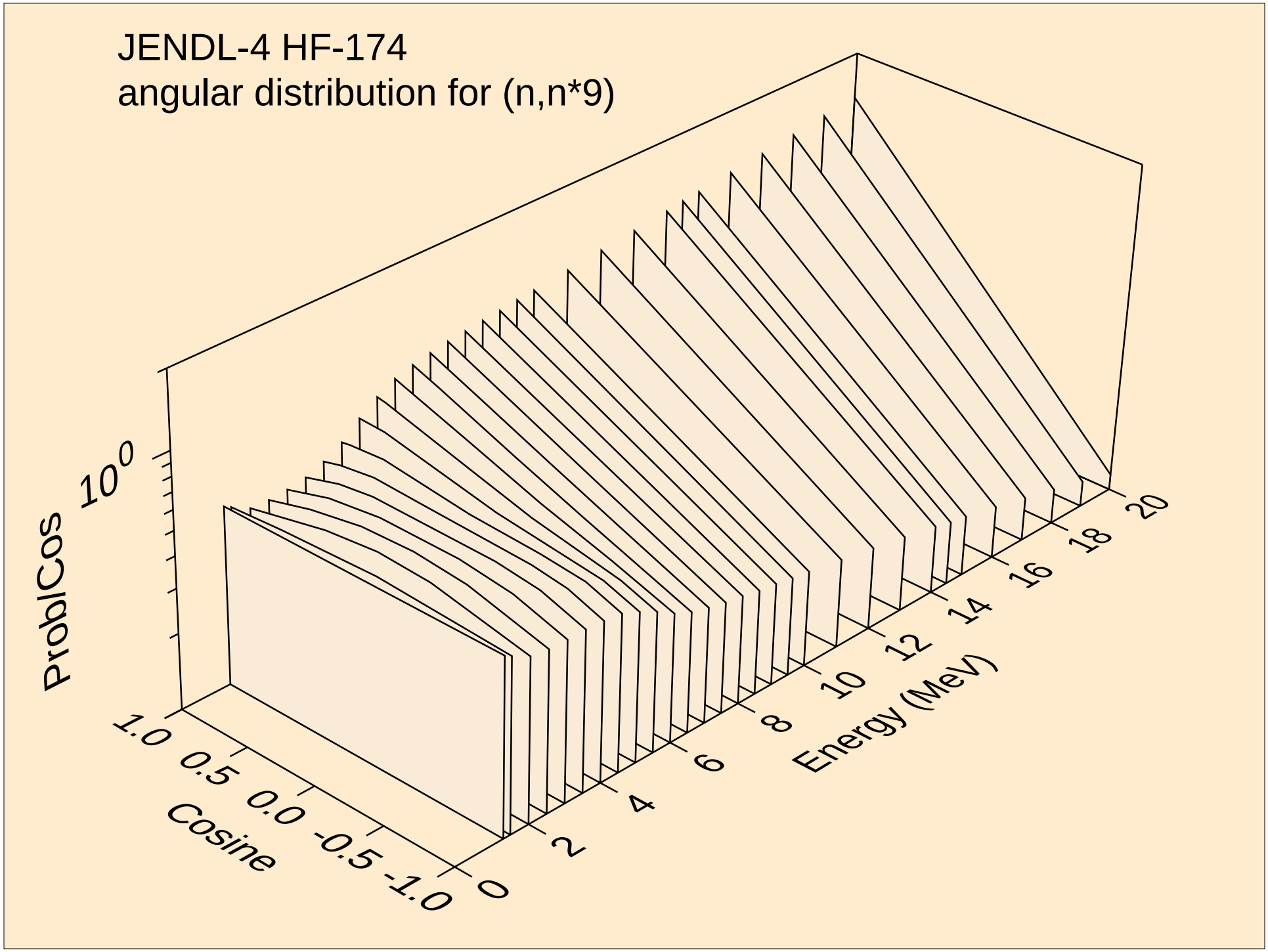
JENDL-4 HF-174
angular distribution for (n,n*9)
ProbCos
10^0
Cosine
1.0
0.5
0.0
-0.5
-1.0
Energy (MeV)
0
2
4
6
8
10
12
14
16
18
20

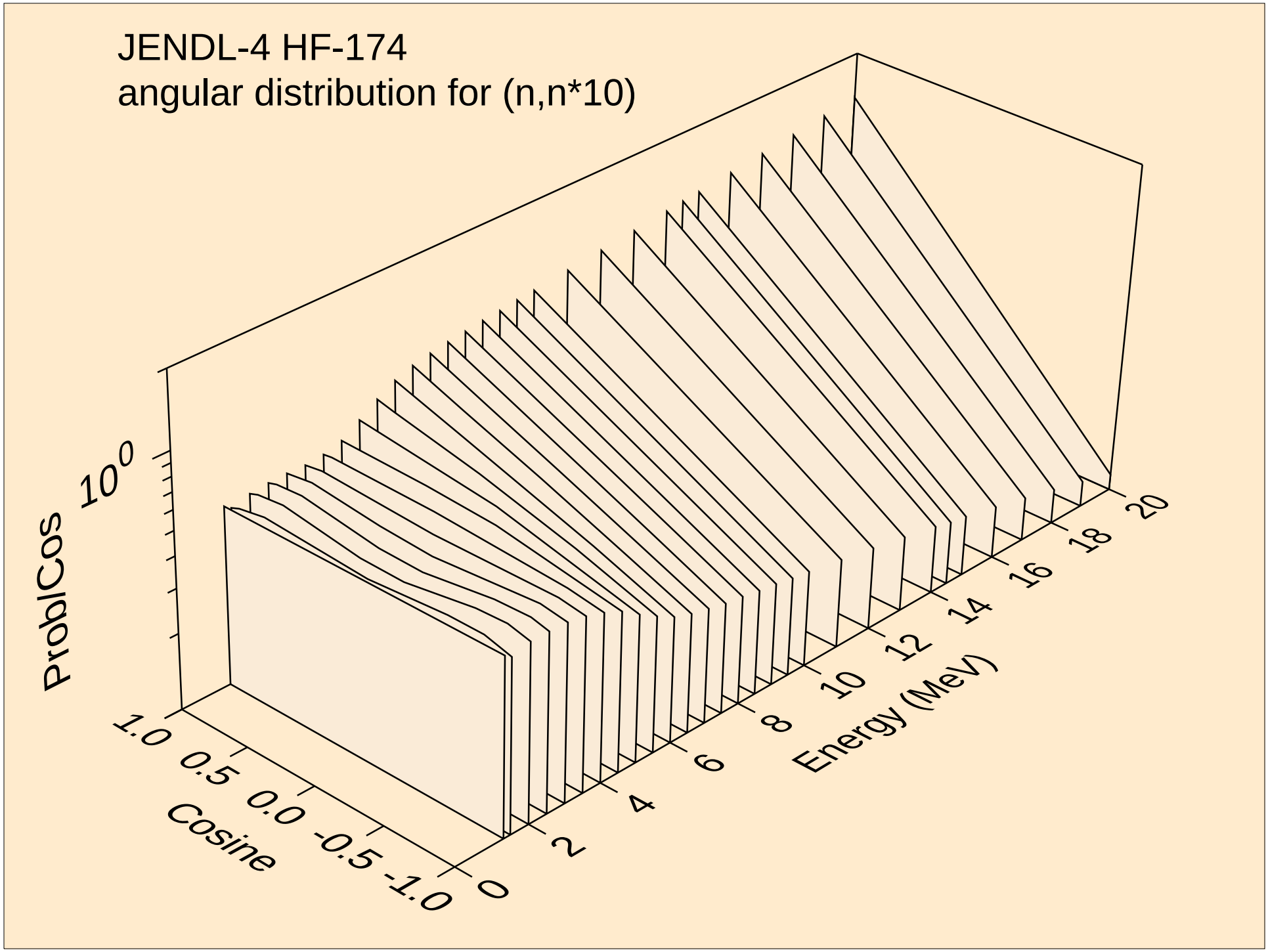
JENDL-4 HF-174
angular distribution for (n,n*10)
ProbCos
10^0
Cosine
1.0
0.5
0.0
-0.5
-1.0
Energy (MeV)
0
2
4
6
8
10
12
14
16
18
20

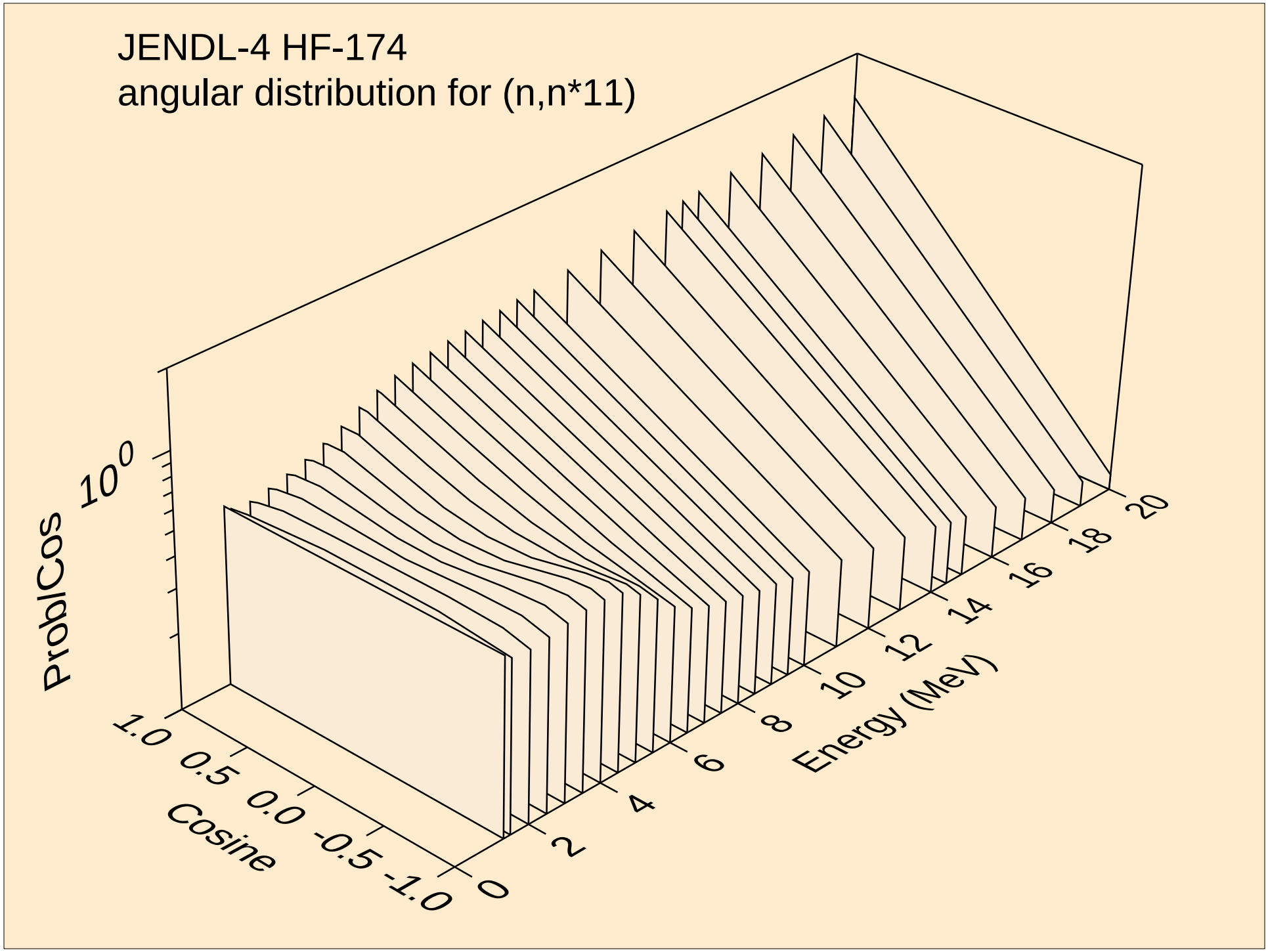
JENDL-4 HF-174
angular distribution for (n,n*11)
ProbCos
10^0
Cosine
1.0
0.5
0.0
-0.5
-1.0
Energy (MeV)
0
2
4
6
8
10
12
14
16
18
20

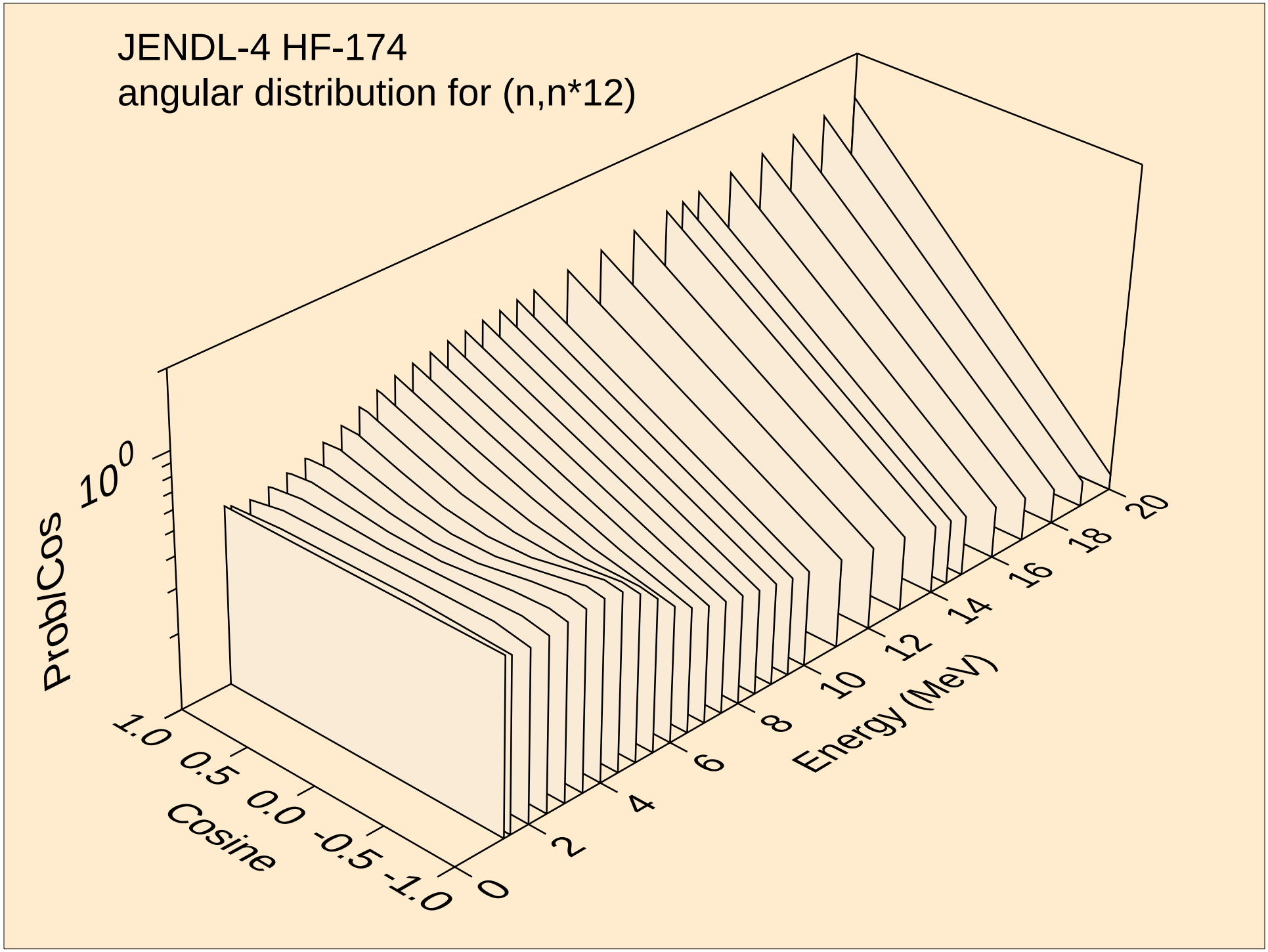
JENDL-4 HF-174
angular distribution for (n,n*12)
ProbCos
10^0
Cosine
1.0
0.5
0.0
-0.5
-1.0
Energy (MeV)
0
2
4
6
8
10
12
14
16
18
20

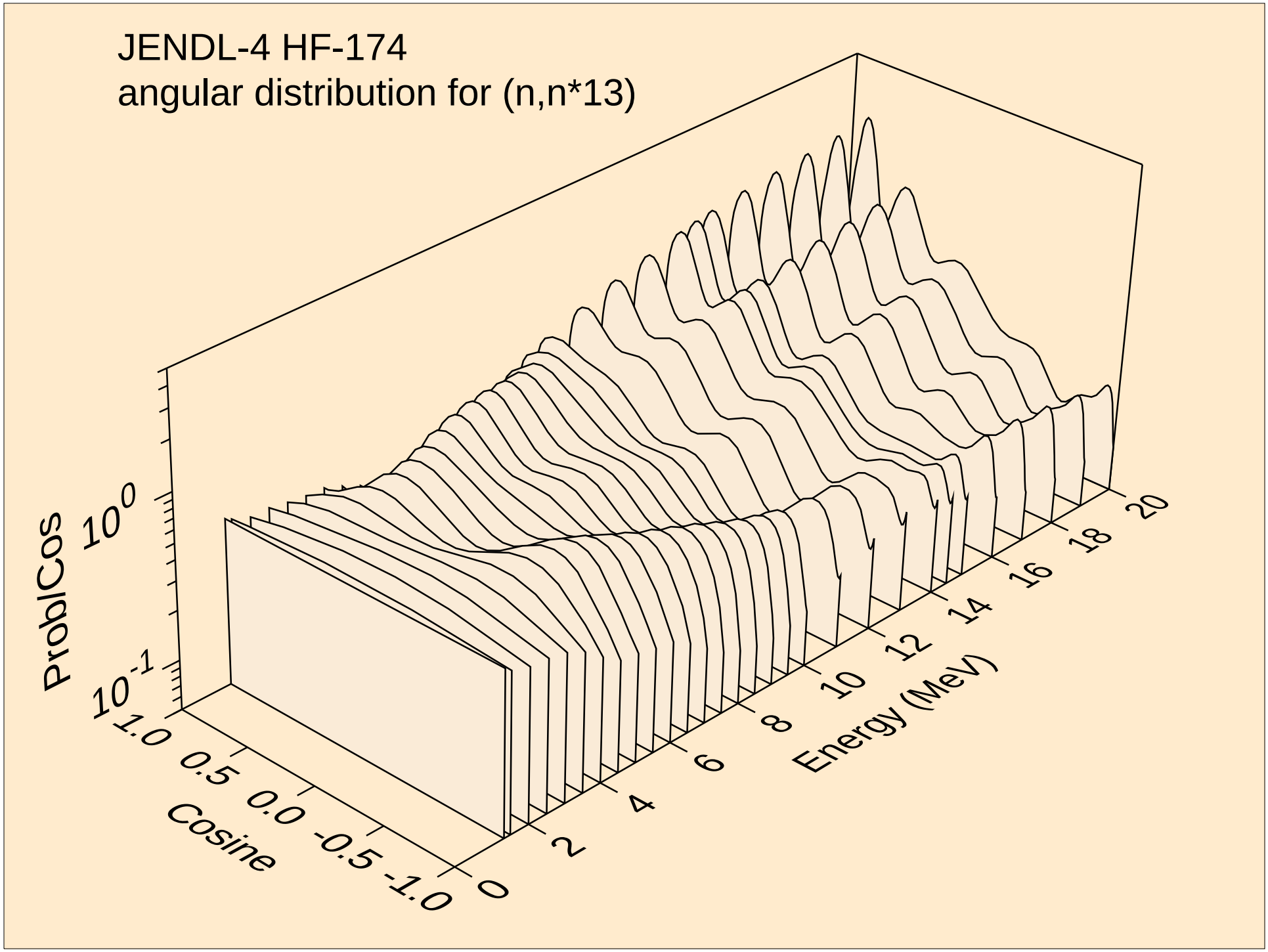
JENDL-4 HF-174
angular distribution for (n,n*13)
ProblCos
10^0
10^{-1}
1.0
0.5
0.0
-0.5
-1.0
Cosine
0
2
4
6
8
10
12
14
16
18
20
Energy (MeV)

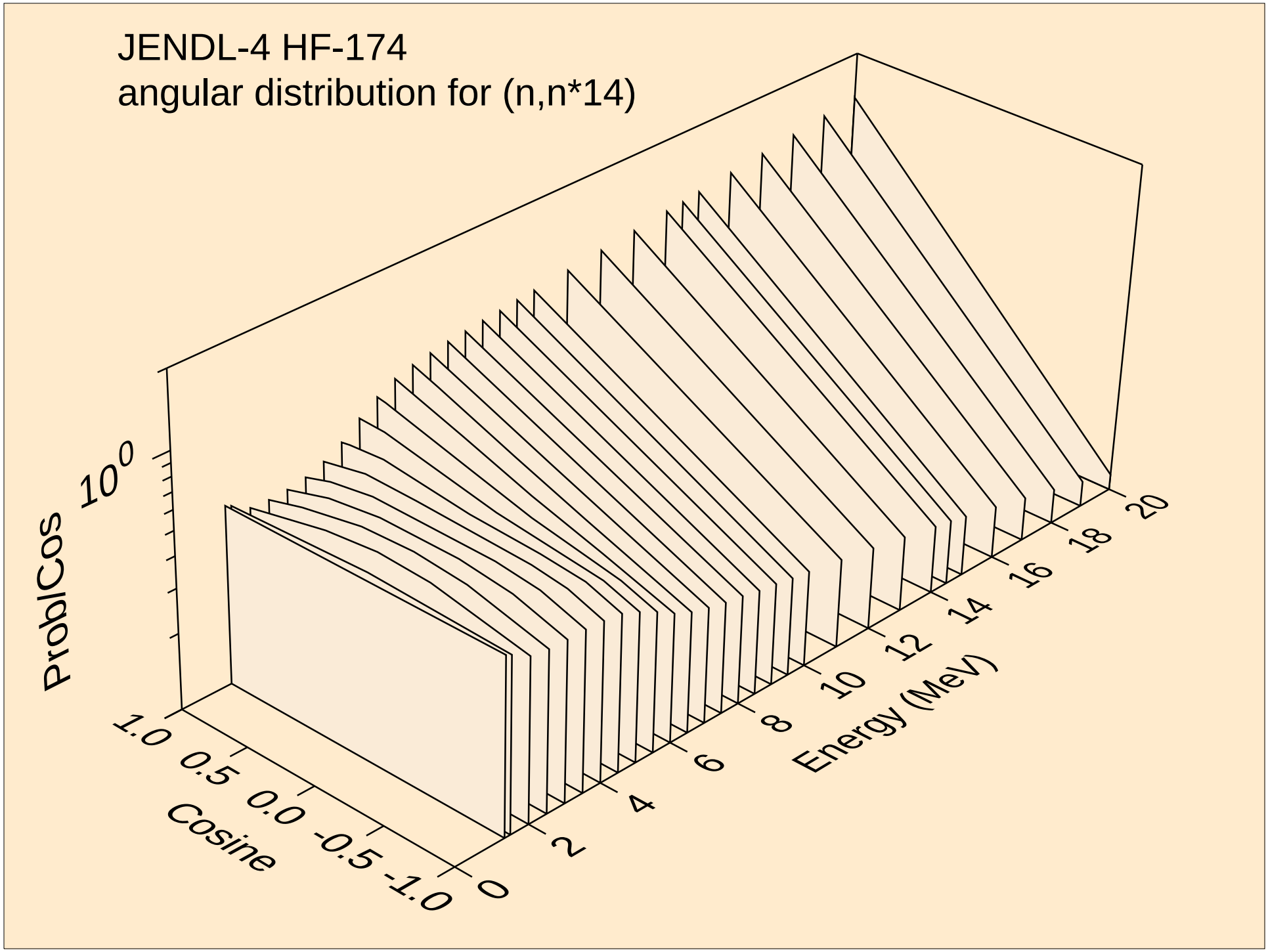
JENDL-4 HF-174
angular distribution for (n,n*14)
ProblCos
10^0
1.0
0.5
0.0
-0.5
-1.0
Cosine
0
2
4
6
8
10
12
14
16
18
20
Energy (MeV)

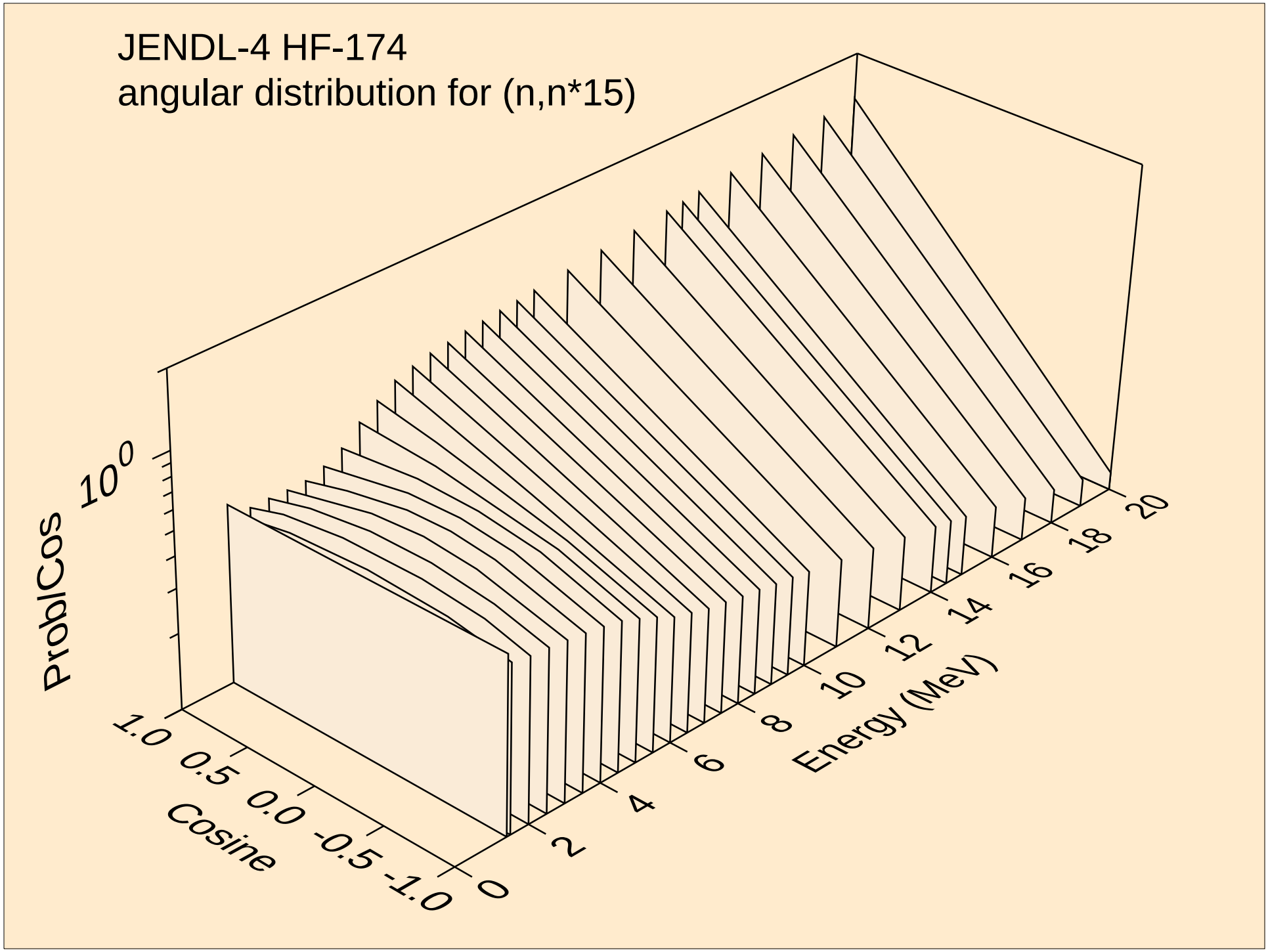
JENDL-4 HF-174
angular distribution for (n,n*15)
ProblCos
10^0
1.0
0.5
0.0
-0.5
-1.0
Cosine
0
2
4
6
8
10
12
14
16
18
20
Energy (MeV)

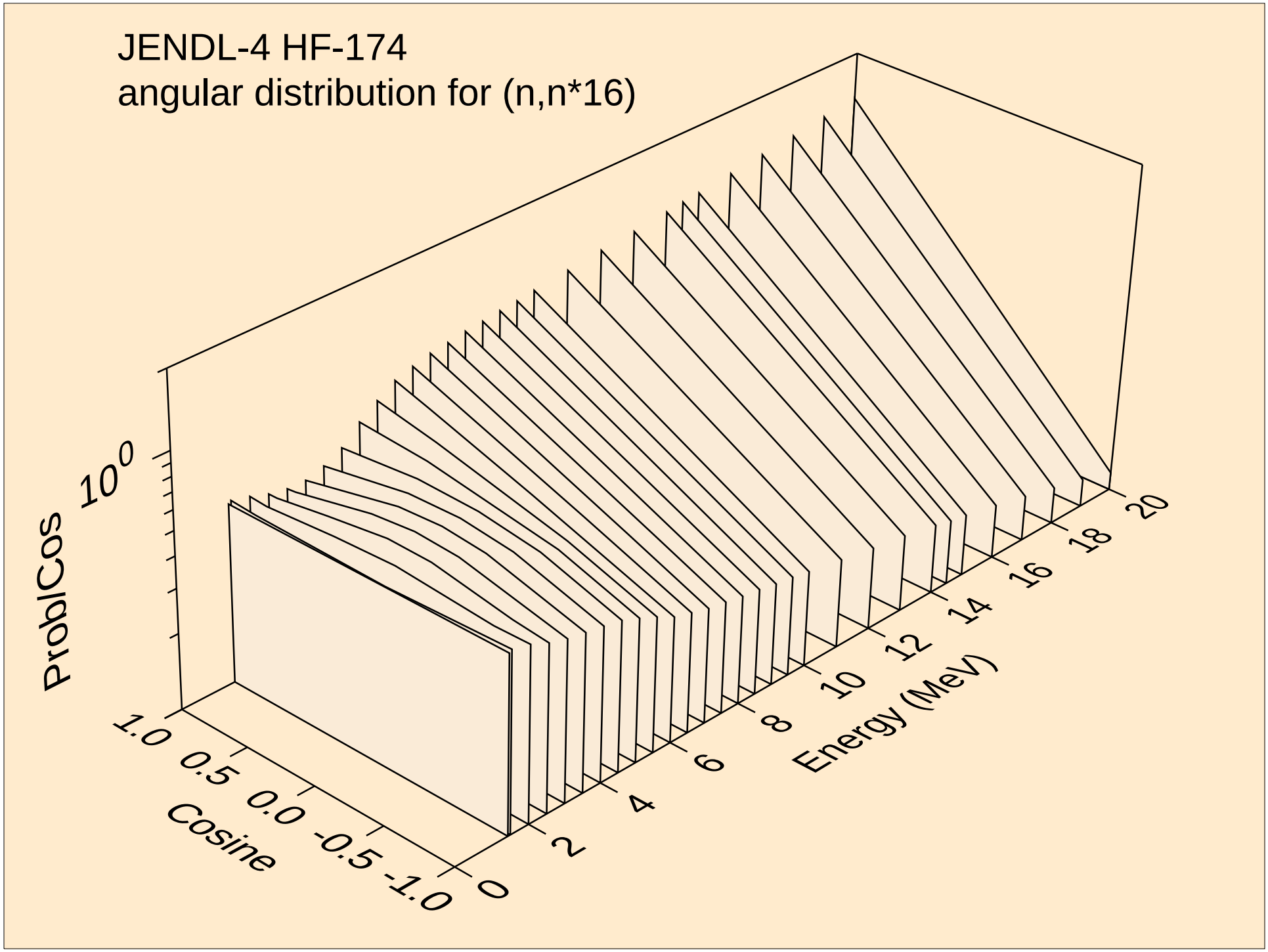
JENDL-4 HF-174
angular distribution for (n,n*16)
ProbCos
10^0
Cosine
1.0
0.5
0.0
-0.5
-1.0
Energy (MeV)
0
2
4
6
8
10
12
14
16
18
20

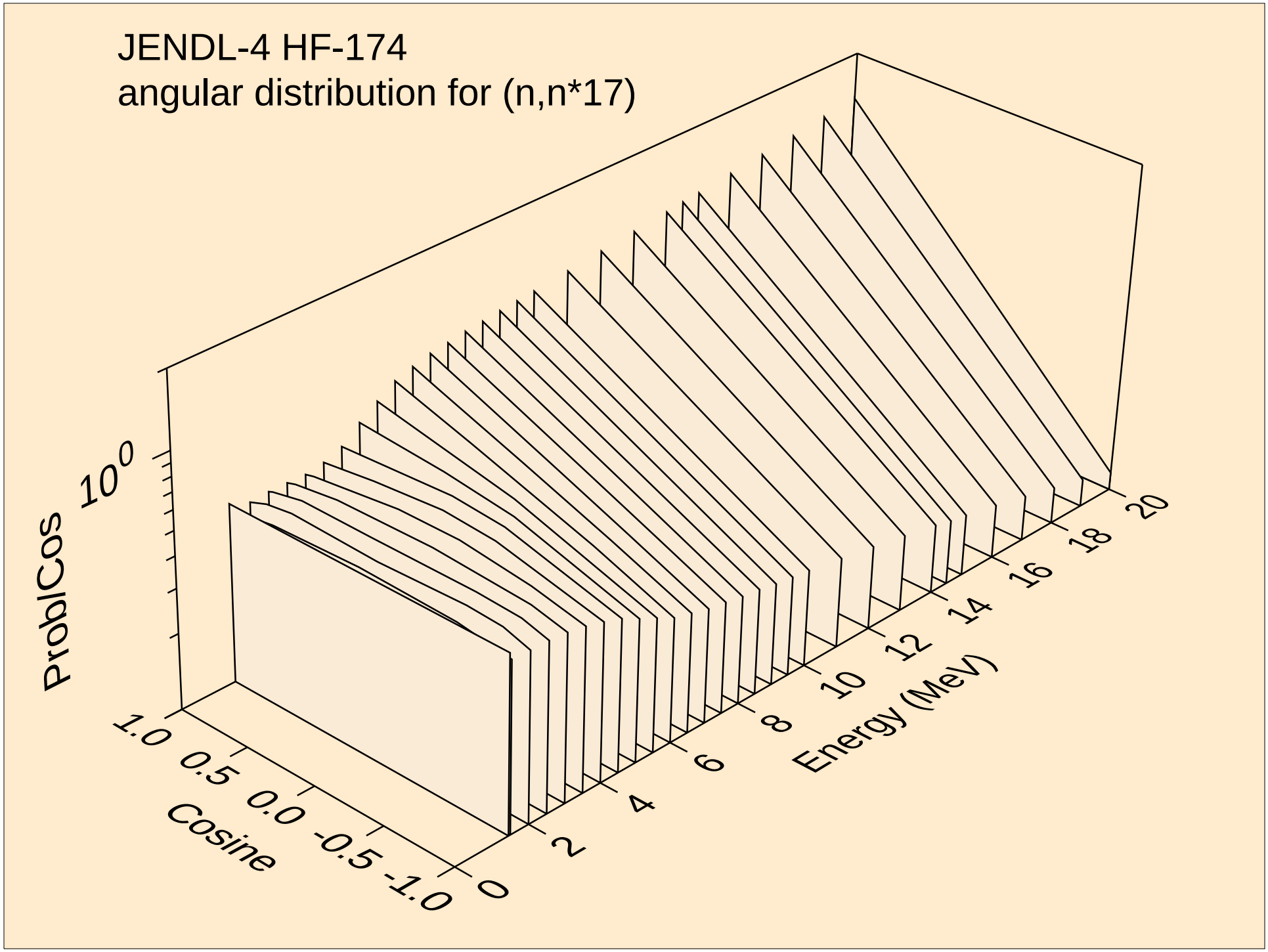
JENDL-4 HF-174
angular distribution for (n,n*17)
ProblCos
10^0
1.0
0.5
0.0
-0.5
-1.0
Cosine
0
2
4
6
8
10
12
14
16
18
20
Energy (MeV)

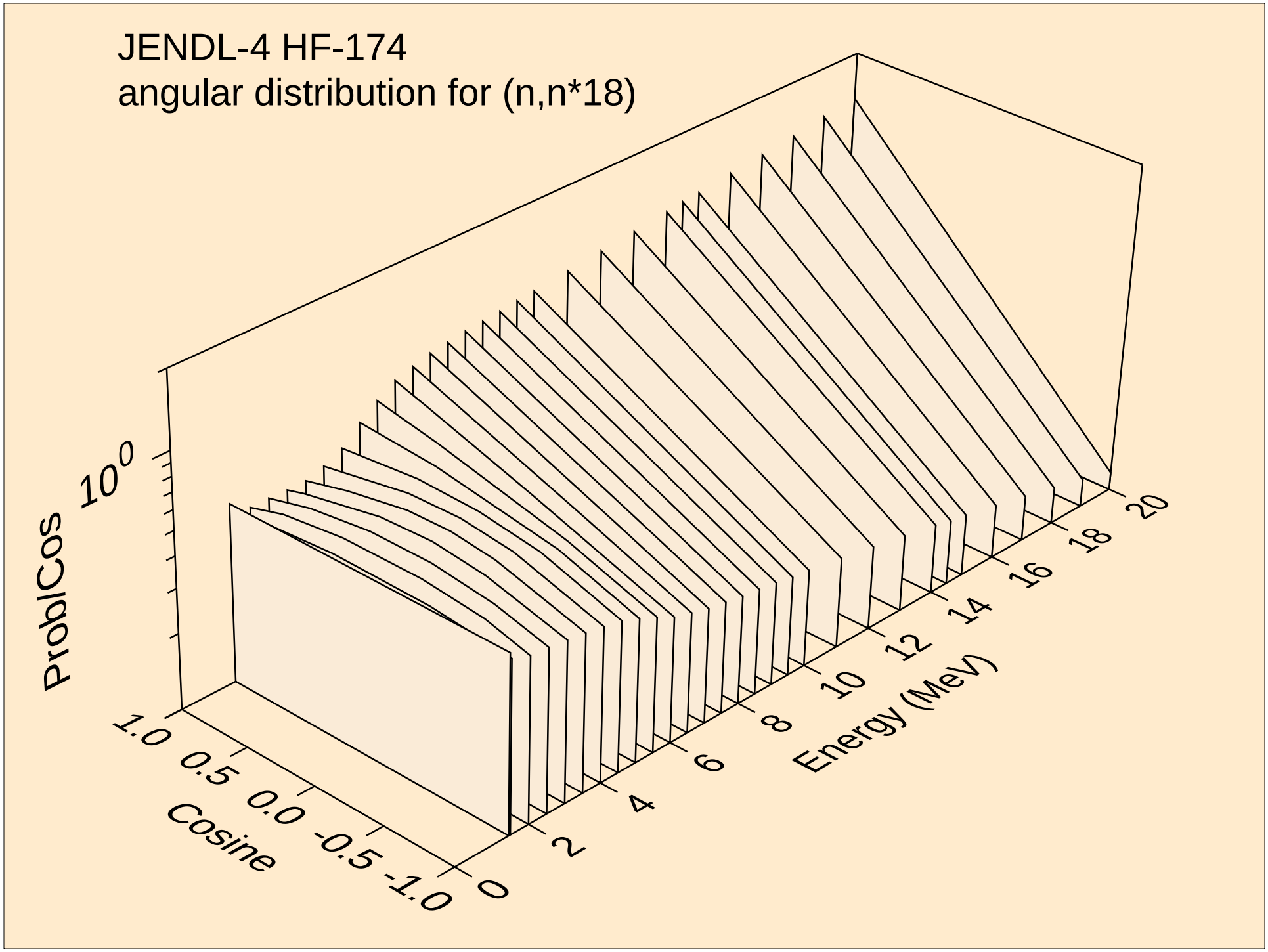
JENDL-4 HF-174
angular distribution for (n,n*18)
ProbCos
10^0
Cosine
1.0
0.5
0.0
-0.5
-1.0
Energy (MeV)
0
2
4
6
8
10
12
14
16
18
20

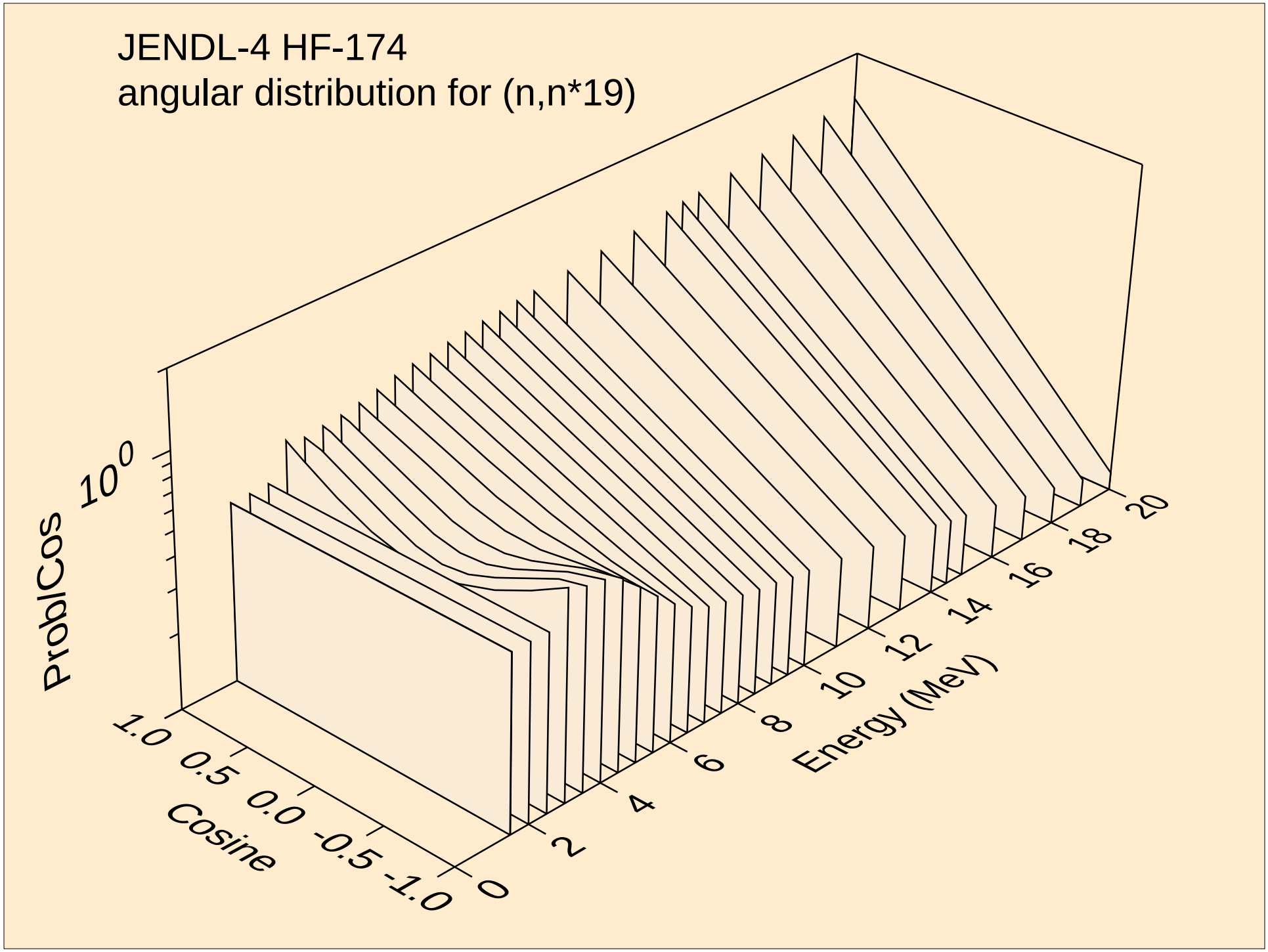
JENDL-4 HF-174
angular distribution for (n,n*19)
ProblCos
10^0
1.0
0.5
0.0
-0.5
-1.0
Cosine
0
2
4
6
8
10
12
14
16
18
20
Energy (MeV)

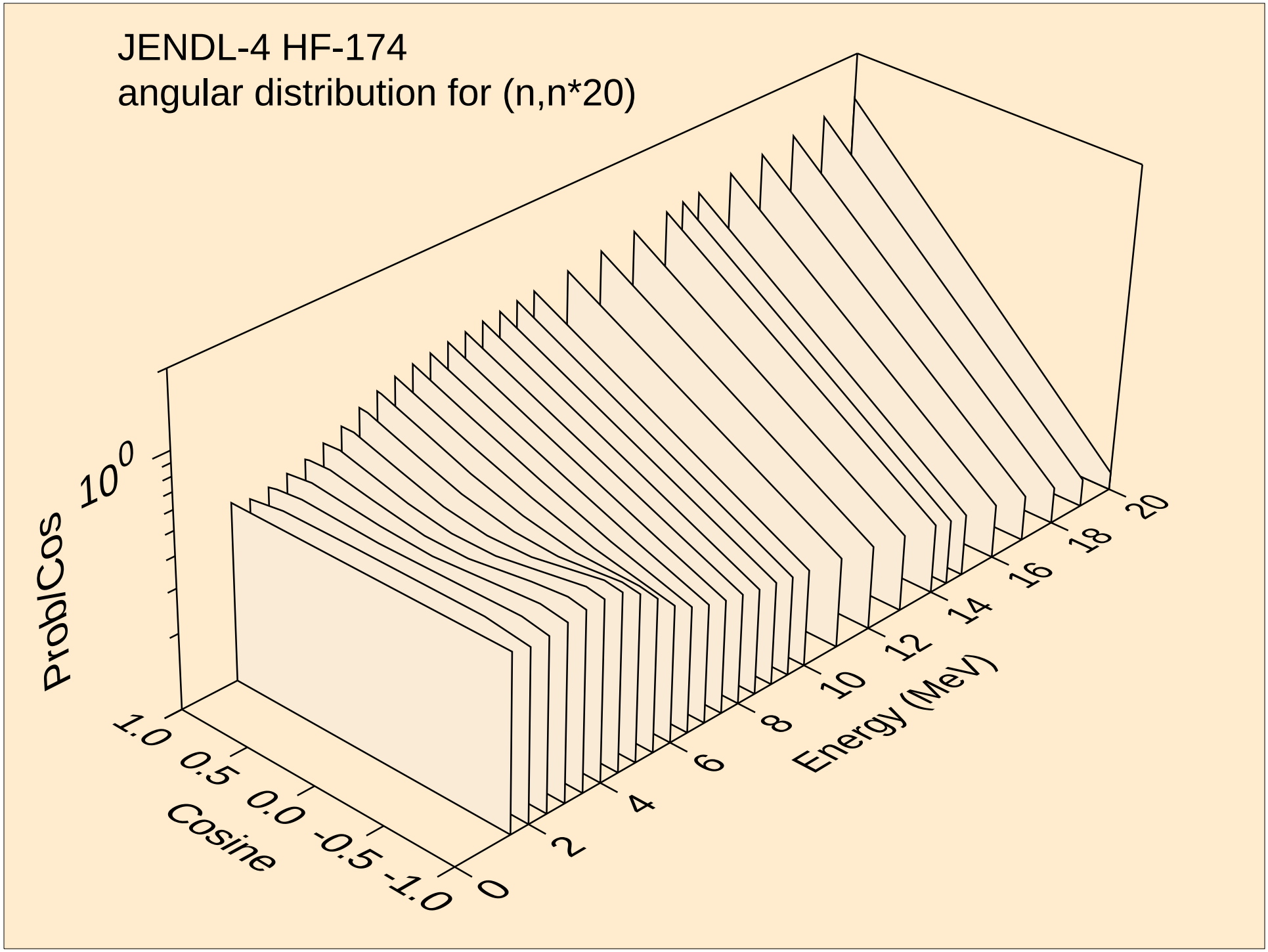
JENDL-4 HF-174
angular distribution for (n,n*20)
ProblCos
10^0
1.0
0.5
0.0
-0.5
-1.0
Cosine
0
2
4
6
8
10
12
14
16
18
20
Energy (MeV)

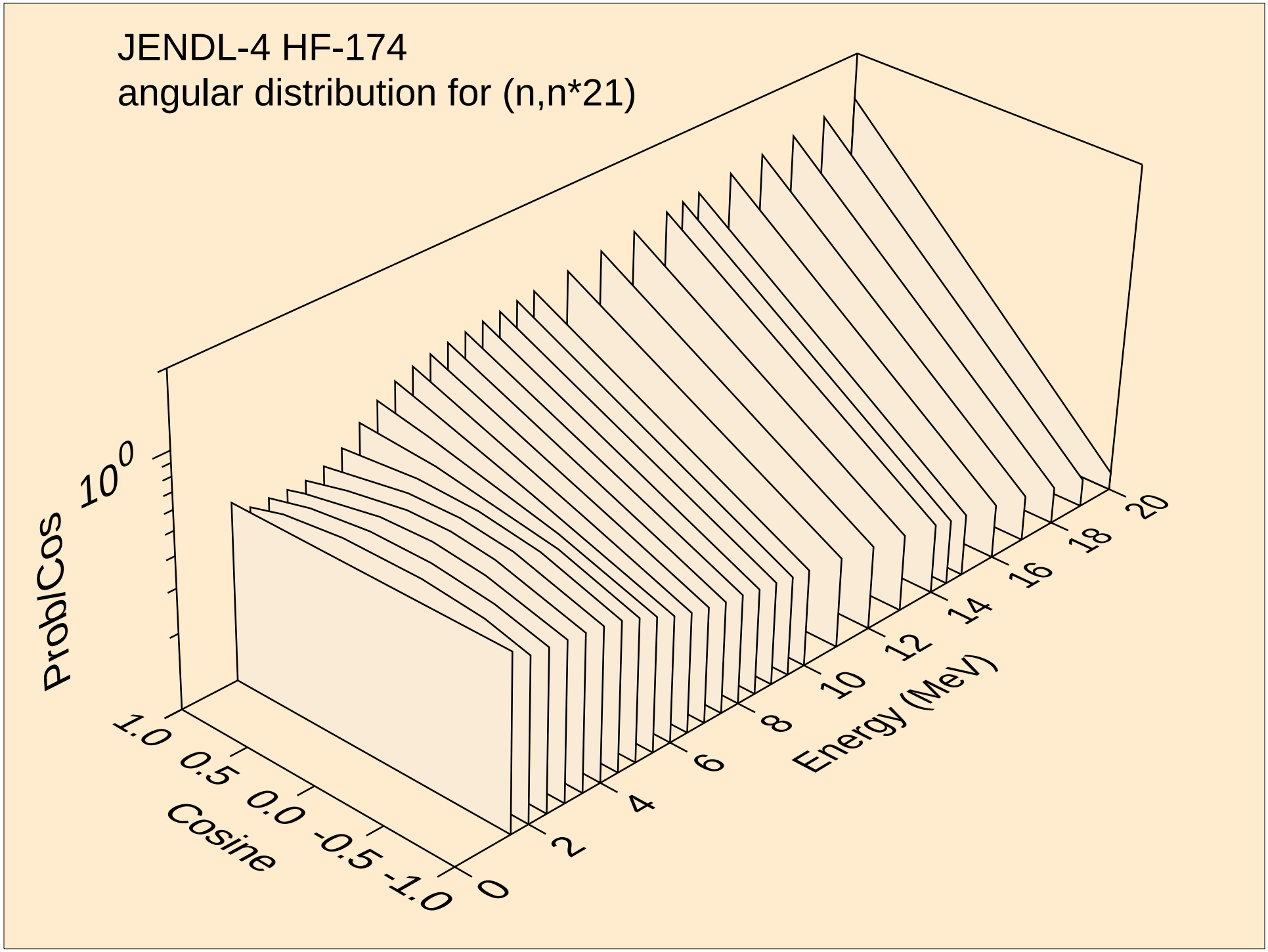
JENDL-4 HF-174
angular distribution for (n,n*21)
ProblCos
10^0
1.0
0.5
0.0
-0.5
-1.0
Cosine
0
2
4
6
8
10
12
14
16
18
20
Energy (MeV)

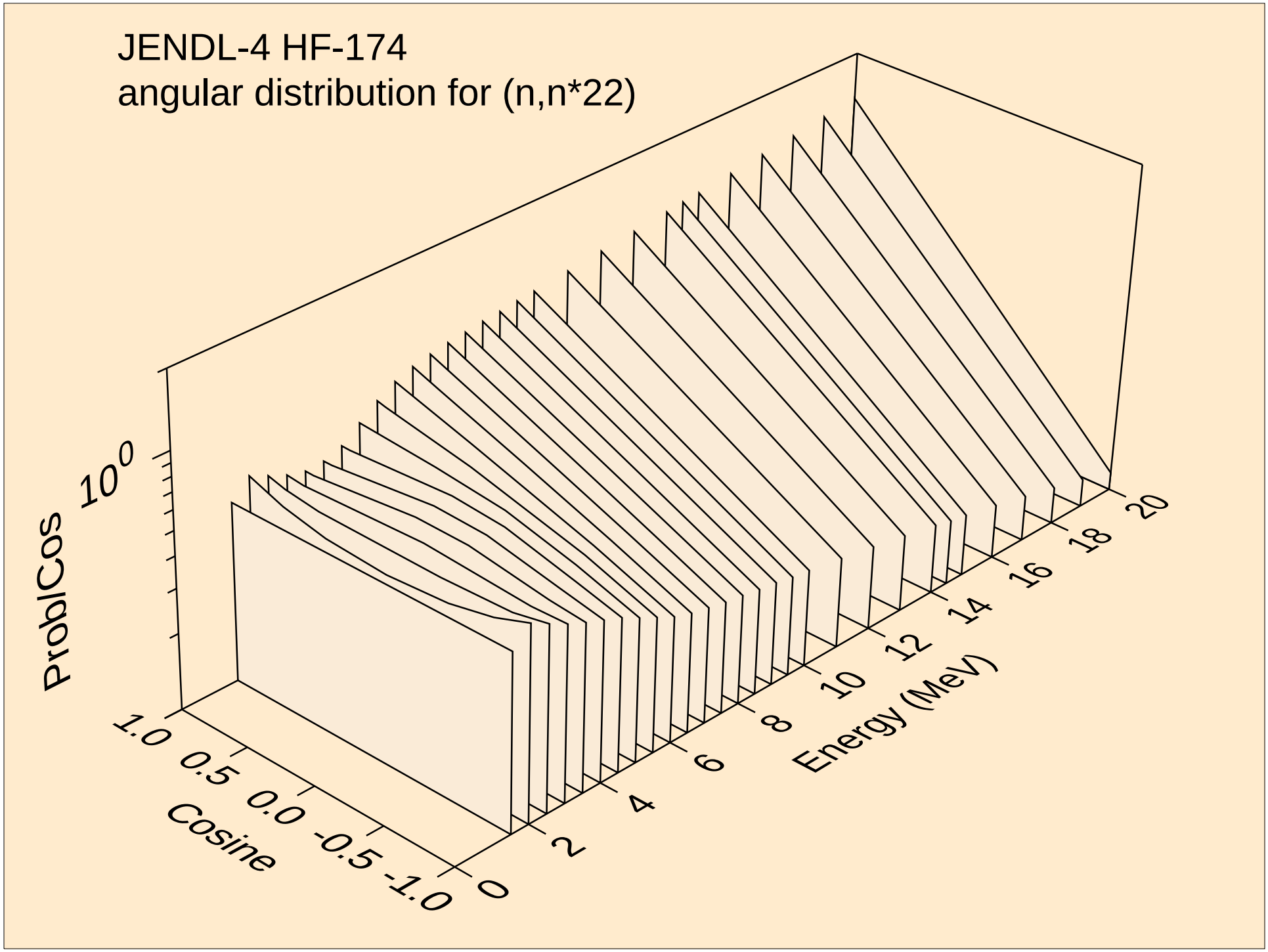
JENDL-4 HF-174
angular distribution for (n,n*22)
ProblCos
10^0
1.0
0.5
0.0
-0.5
-1.0
Cosine
0
2
4
6
8
10
12
14
16
18
20
Energy (MeV)

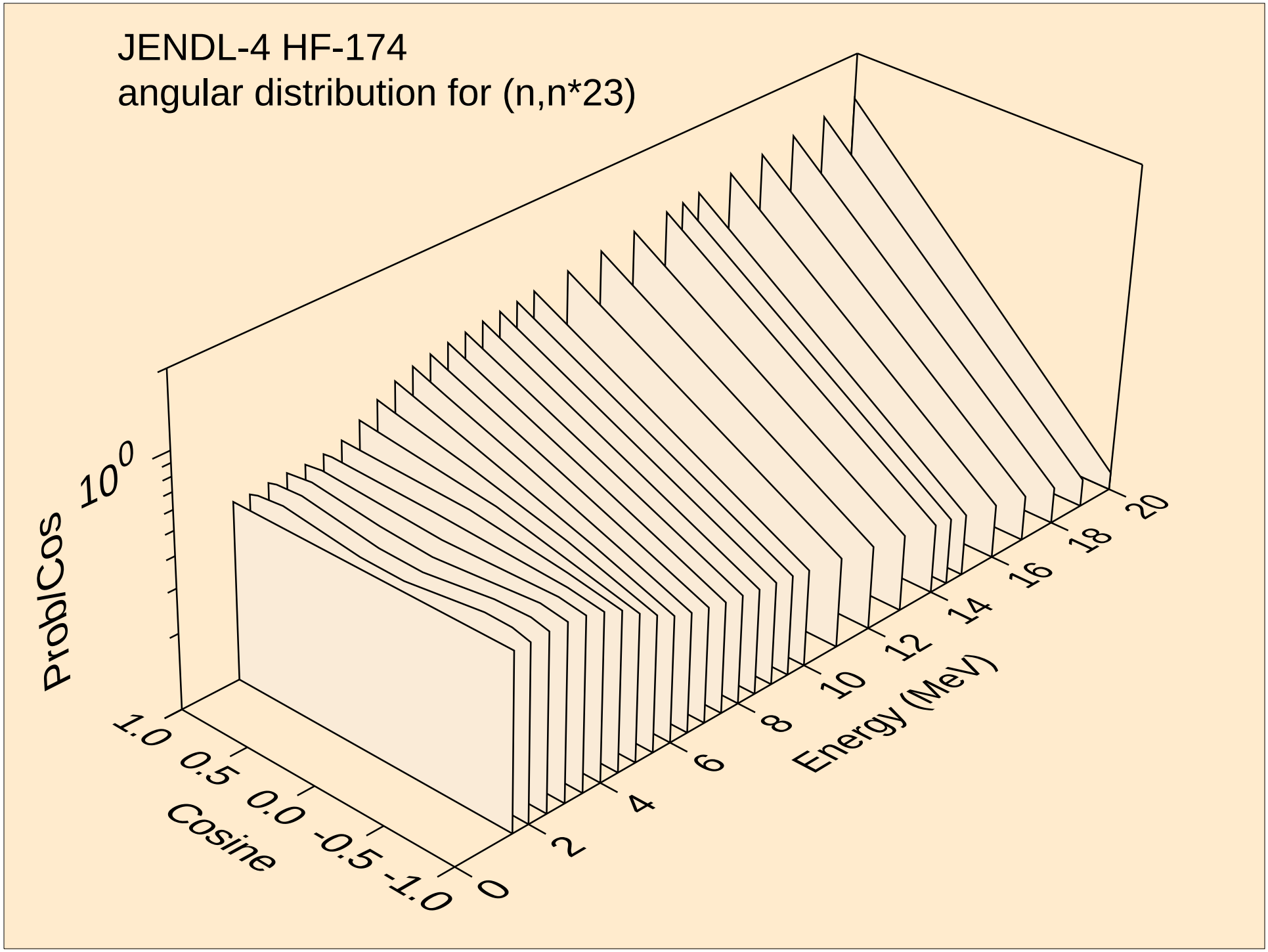
JENDL-4 HF-174
angular distribution for (n,n*23)
ProbCos
10^0
Cosine
1.0
0.5
0.0
-0.5
-1.0
Energy (MeV)
0
2
4
6
8
10
12
14
16
18
20

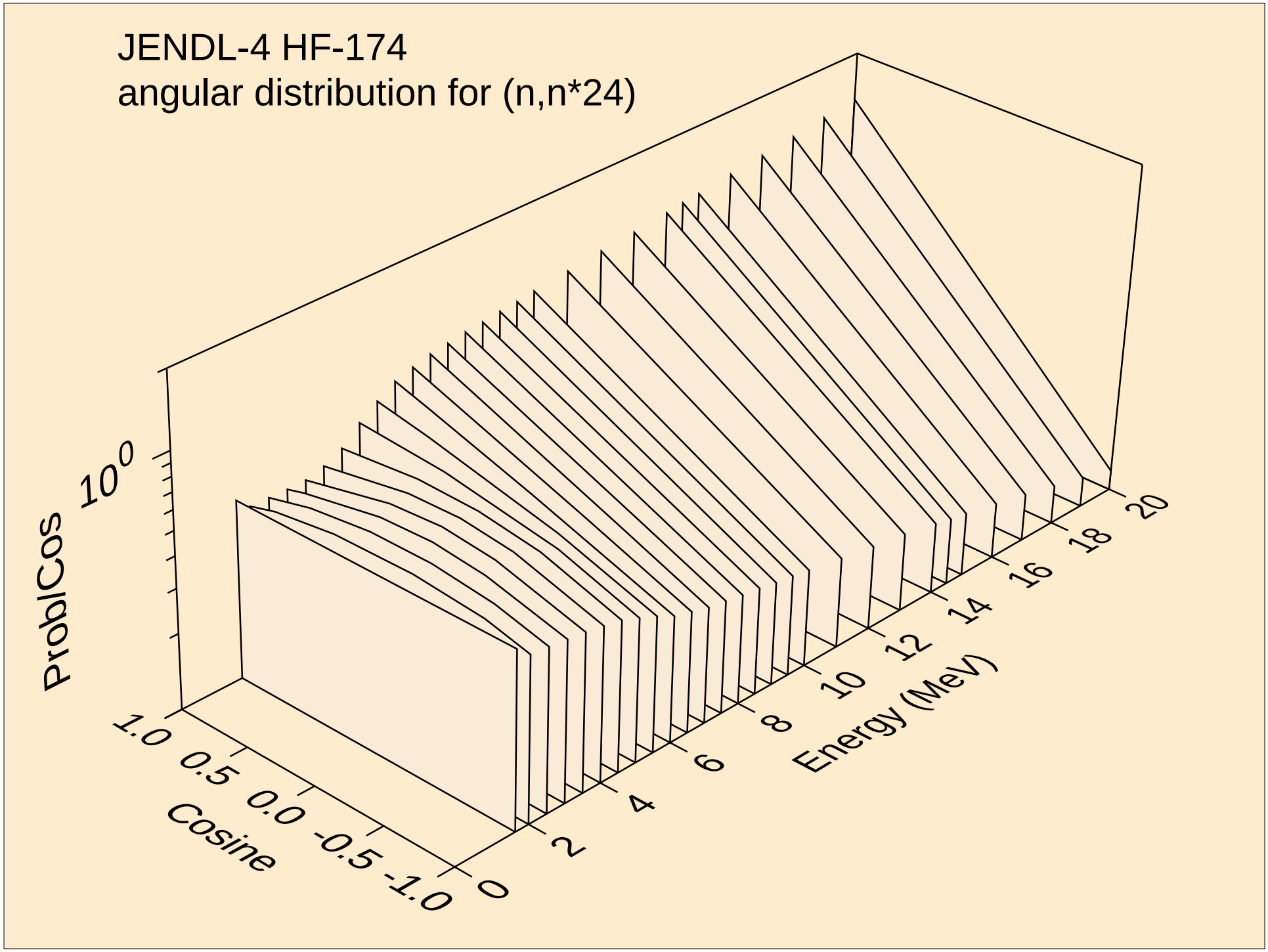
JENDL-4 HF-174
angular distribution for (n,n*24)
ProbCos
10^0
Cosine
1.0
0.5
0.0
-0.5
-1.0
Energy (MeV)
0
2
4
6
8
10
12
14
16
18
20

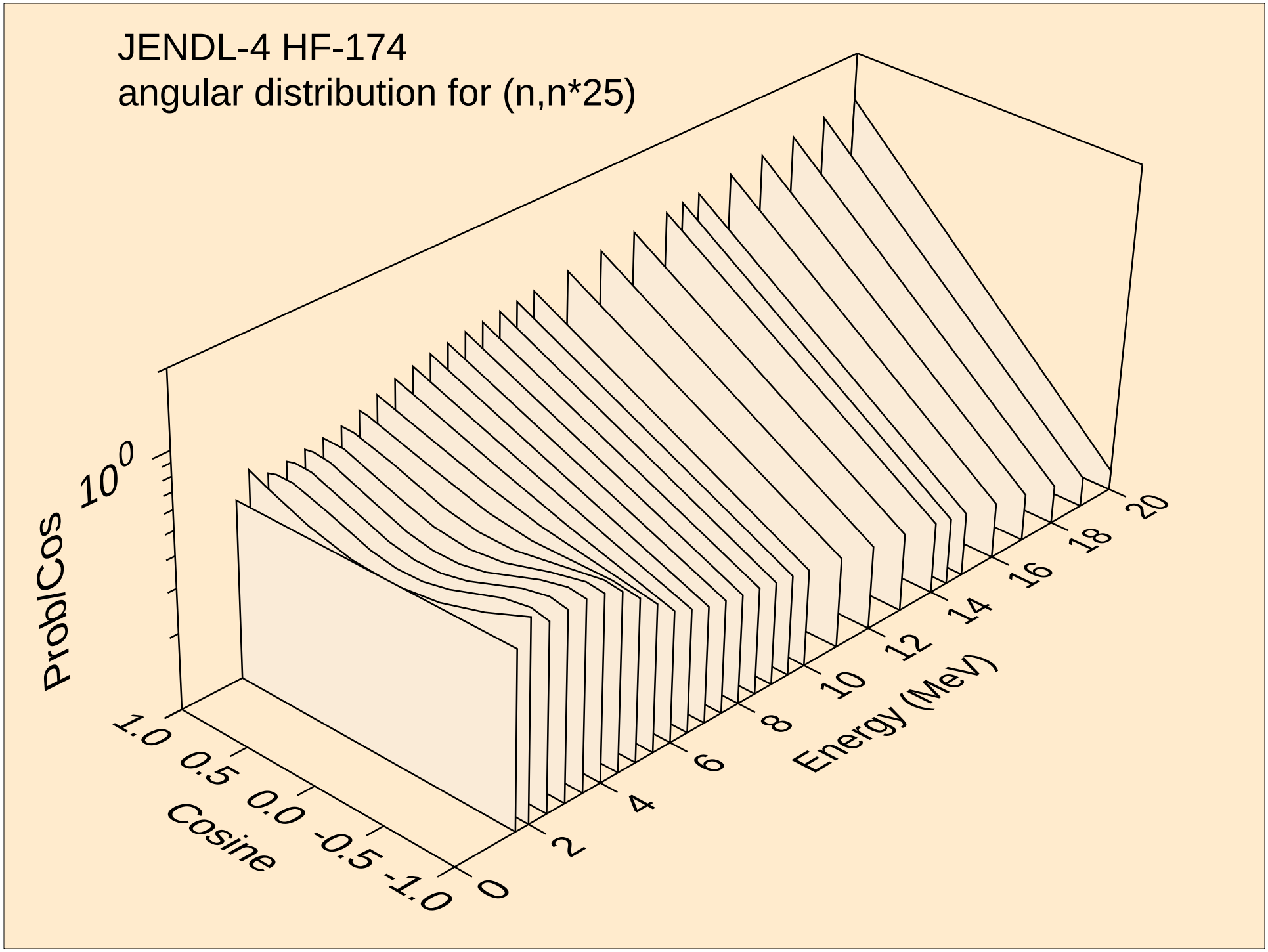
JENDL-4 HF-174
angular distribution for (n,n*25)
ProblCos
10^0
1.0
0.5
0.0
-0.5
-1.0
Cosine
0
2
4
6
8
10
12
14
16
18
20
Energy (MeV)

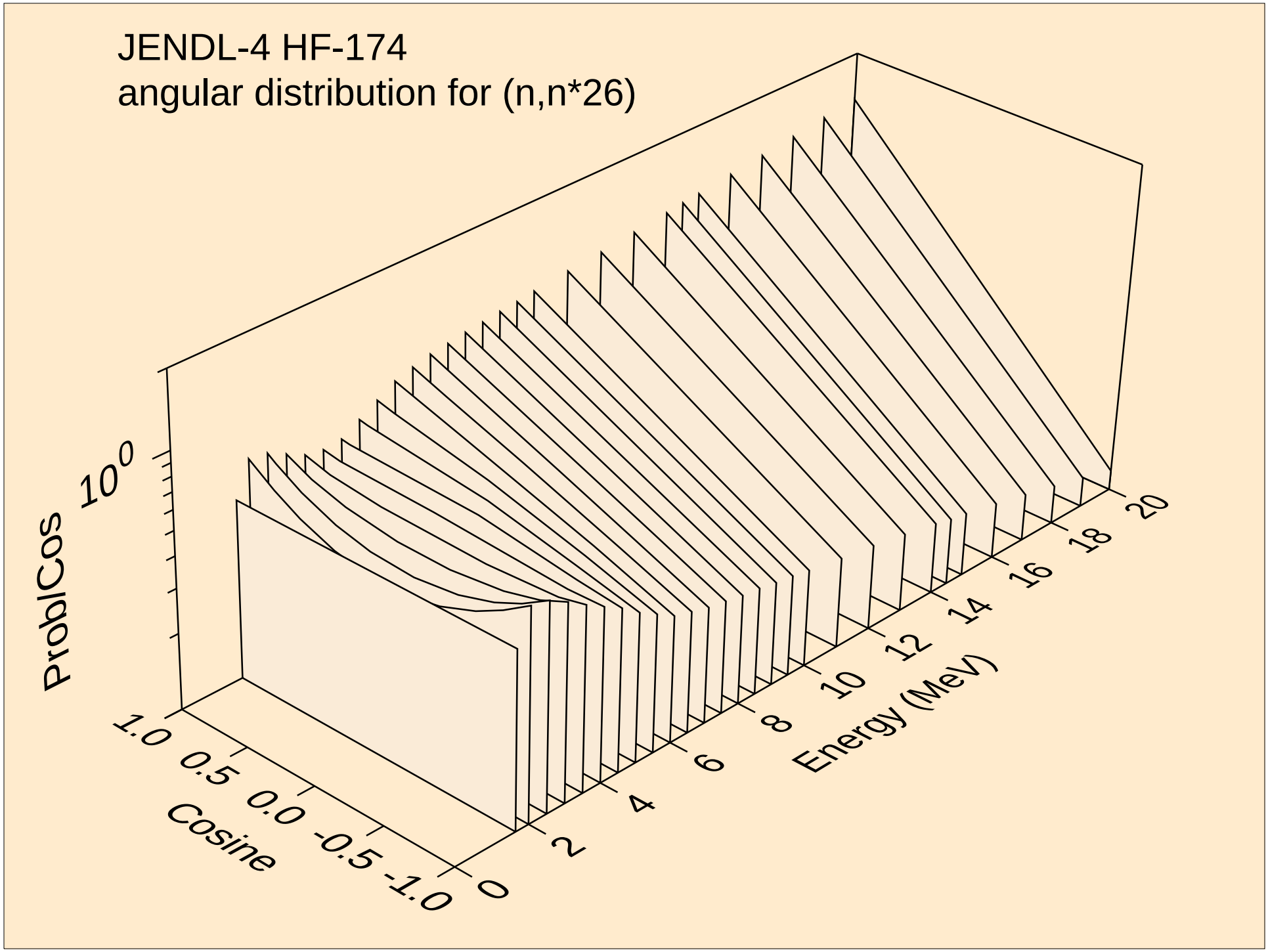
JENDL-4 HF-174
angular distribution for (n,n*26)
ProblCos
10^0
Cosine
1.0
0.5
0.0
-0.5
-1.0
Energy (MeV)
0
2
4
6
8
10
12
14
16
18
20

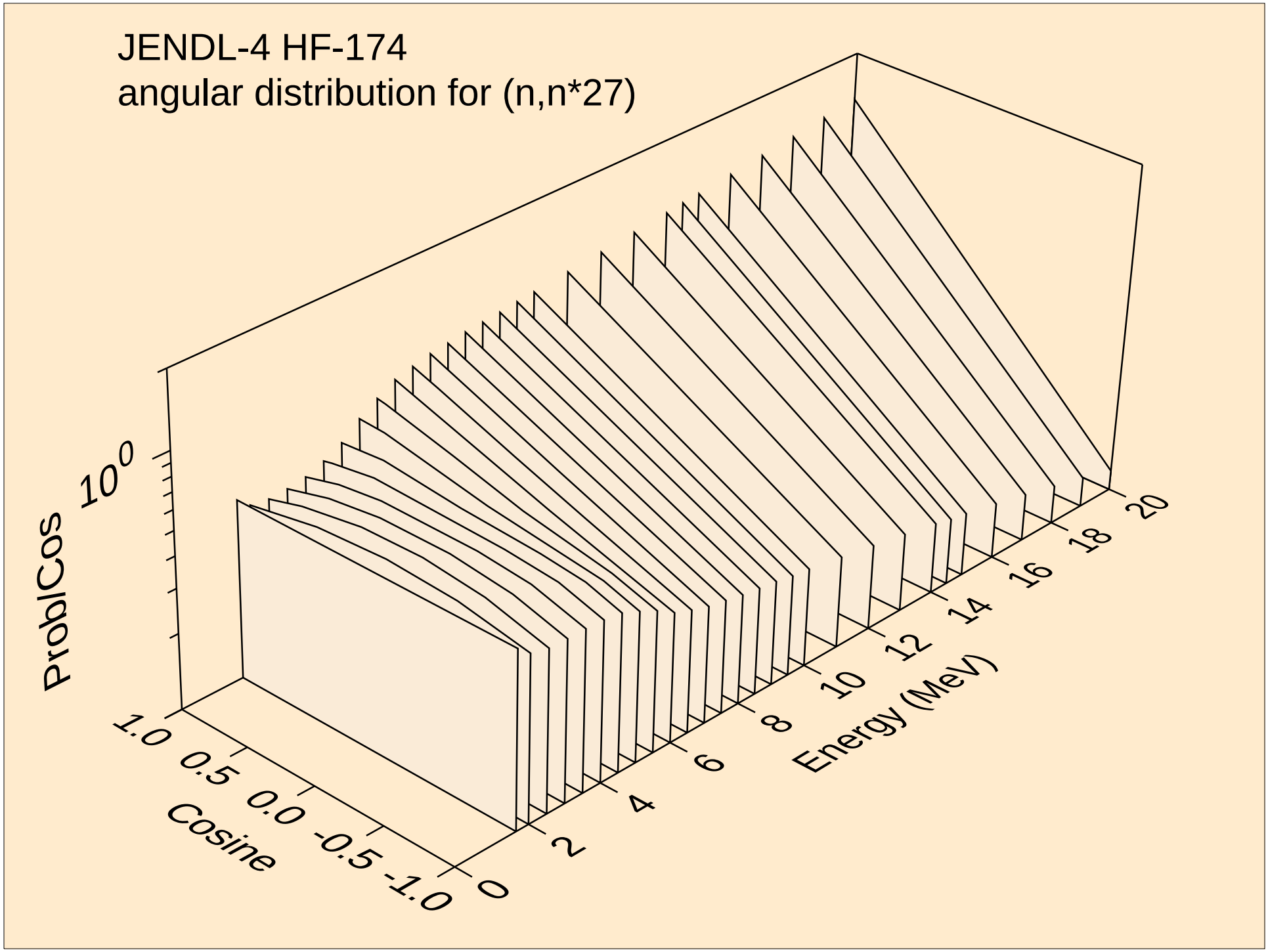
JENDL-4 HF-174
angular distribution for (n,n*27)
ProbCos
10^0
Cosine
1.0
0.5
0.0
-0.5
-1.0
Energy (MeV)
0
2
4
6
8
10
12
14
16
18
20

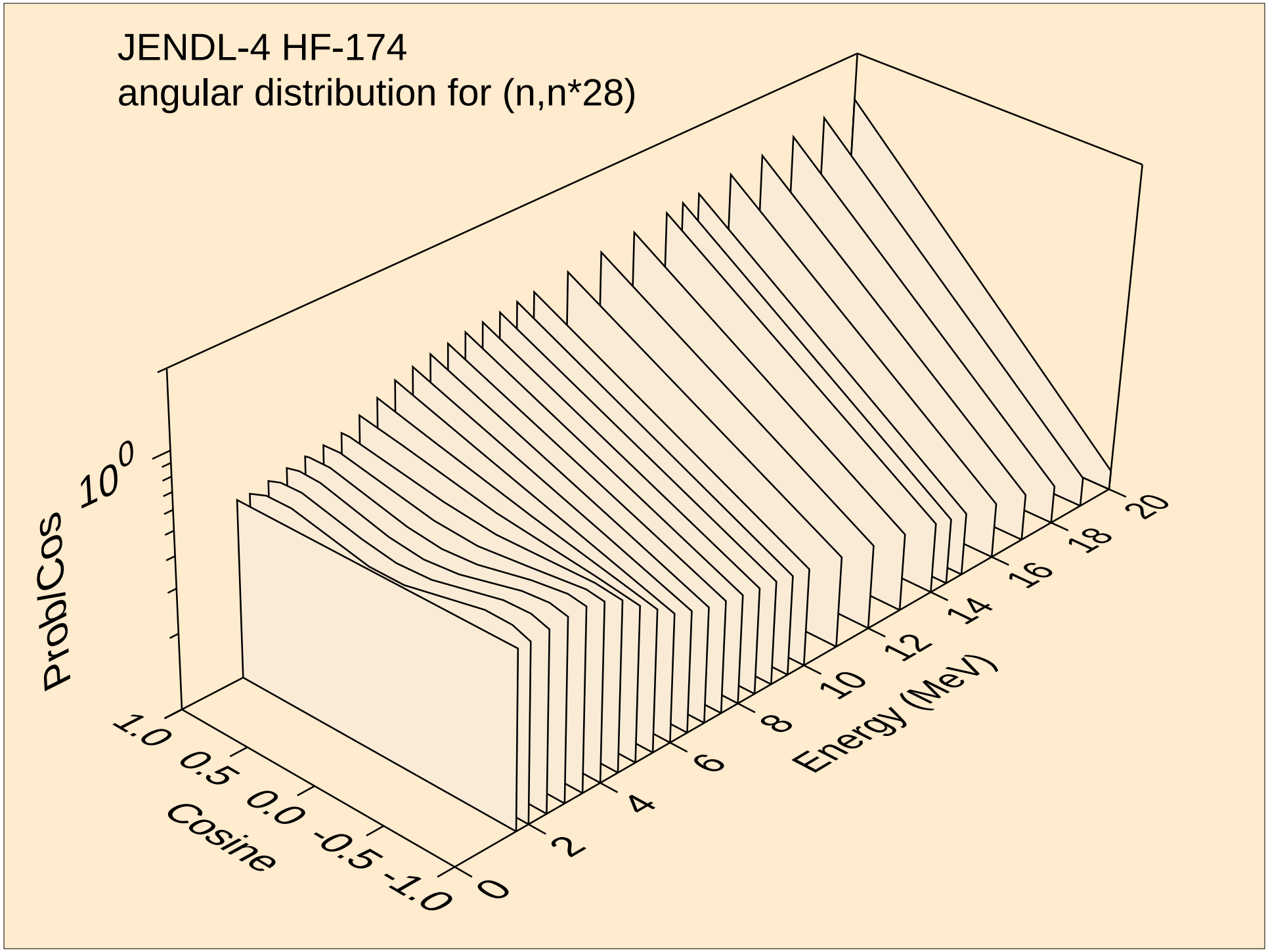
JENDL-4 HF-174
angular distribution for (n,n*28)
ProblCos
10^0
Cosine
1.0
0.5
0.0
-0.5
-1.0
Energy (MeV)
0
2
4
6
8
10
12
14
16
18
20

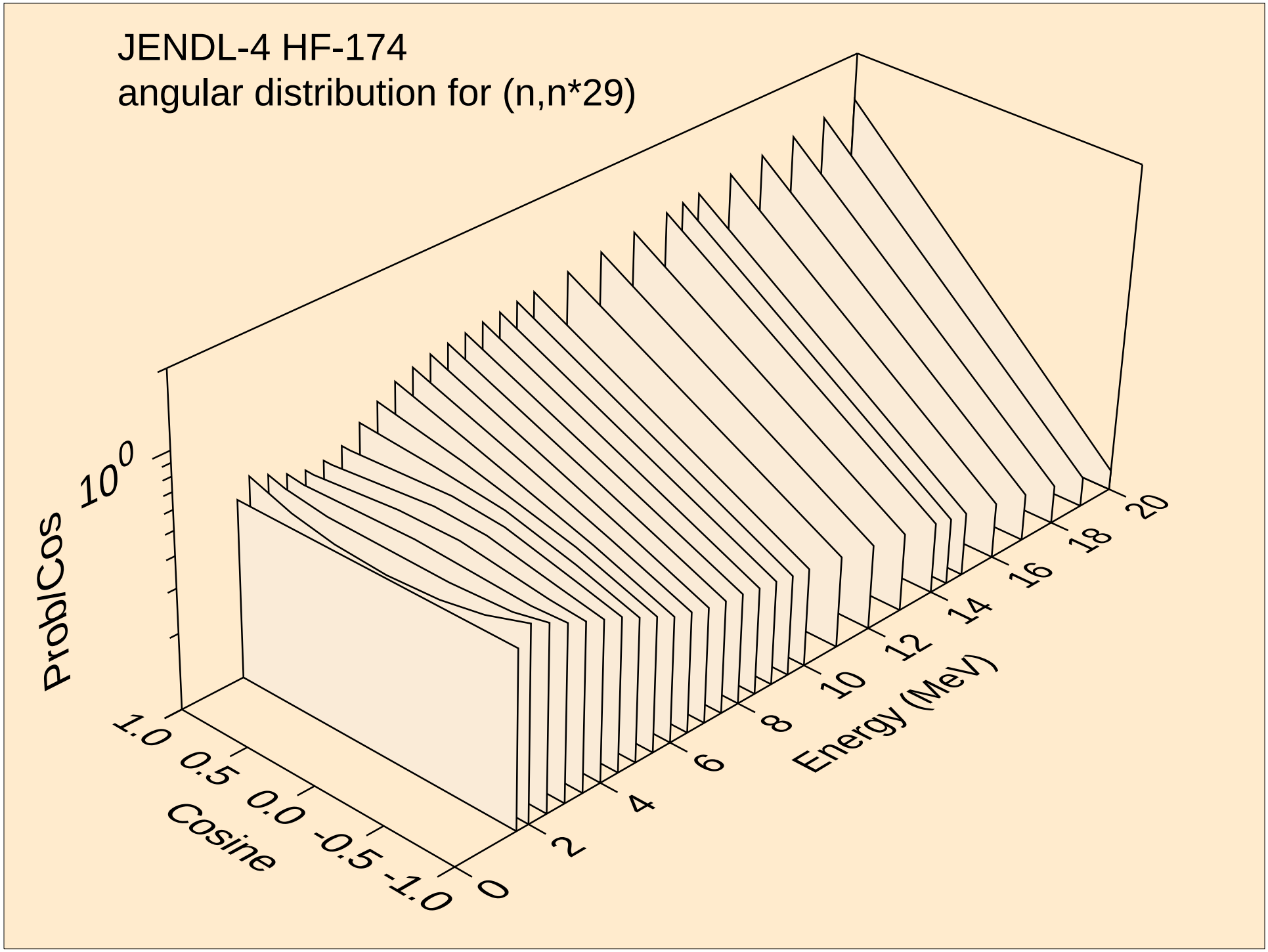
JENDL-4 HF-174
angular distribution for (n,n*29)
ProbCos
10^0
Cosine
1.0
0.5
0.0
-0.5
-1.0
Energy (MeV)
0
2
4
6
8
10
12
14
16
18
20

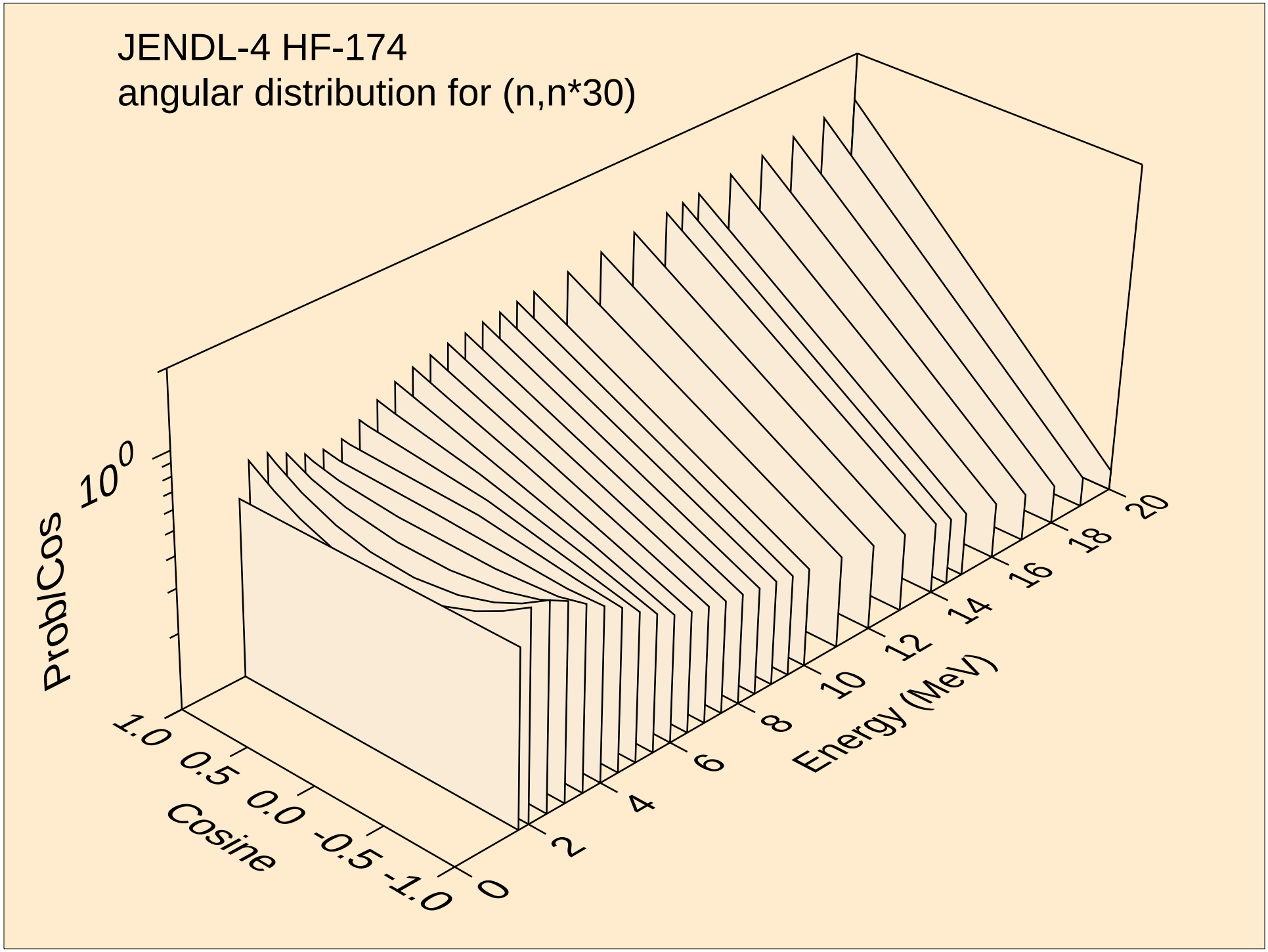
JENDL-4 HF-174
angular distribution for (n,n*30)
ProblCos
10^0
Cosine
1.0
0.5
0.0
-0.5
-1.0
Energy (MeV)
0
2
4
6
8
10
12
14
16
18
20

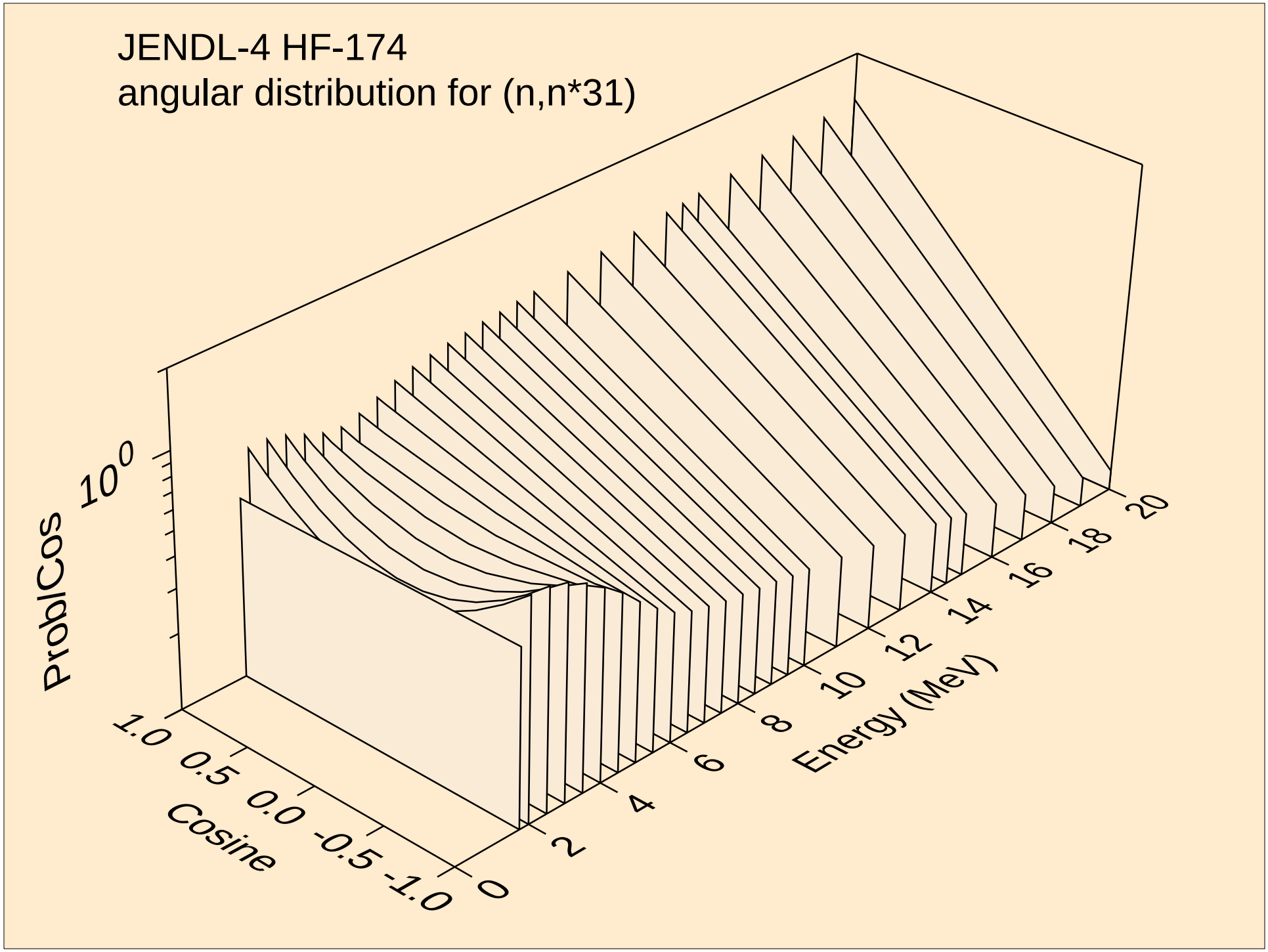
JENDL-4 HF-174
angular distribution for (n,n*31)
ProblCos
10^0
Cosine
1.0
0.5
0.0
-0.5
-1.0
Energy (MeV)
0
2
4
6
8
10
12
14
16
18
20

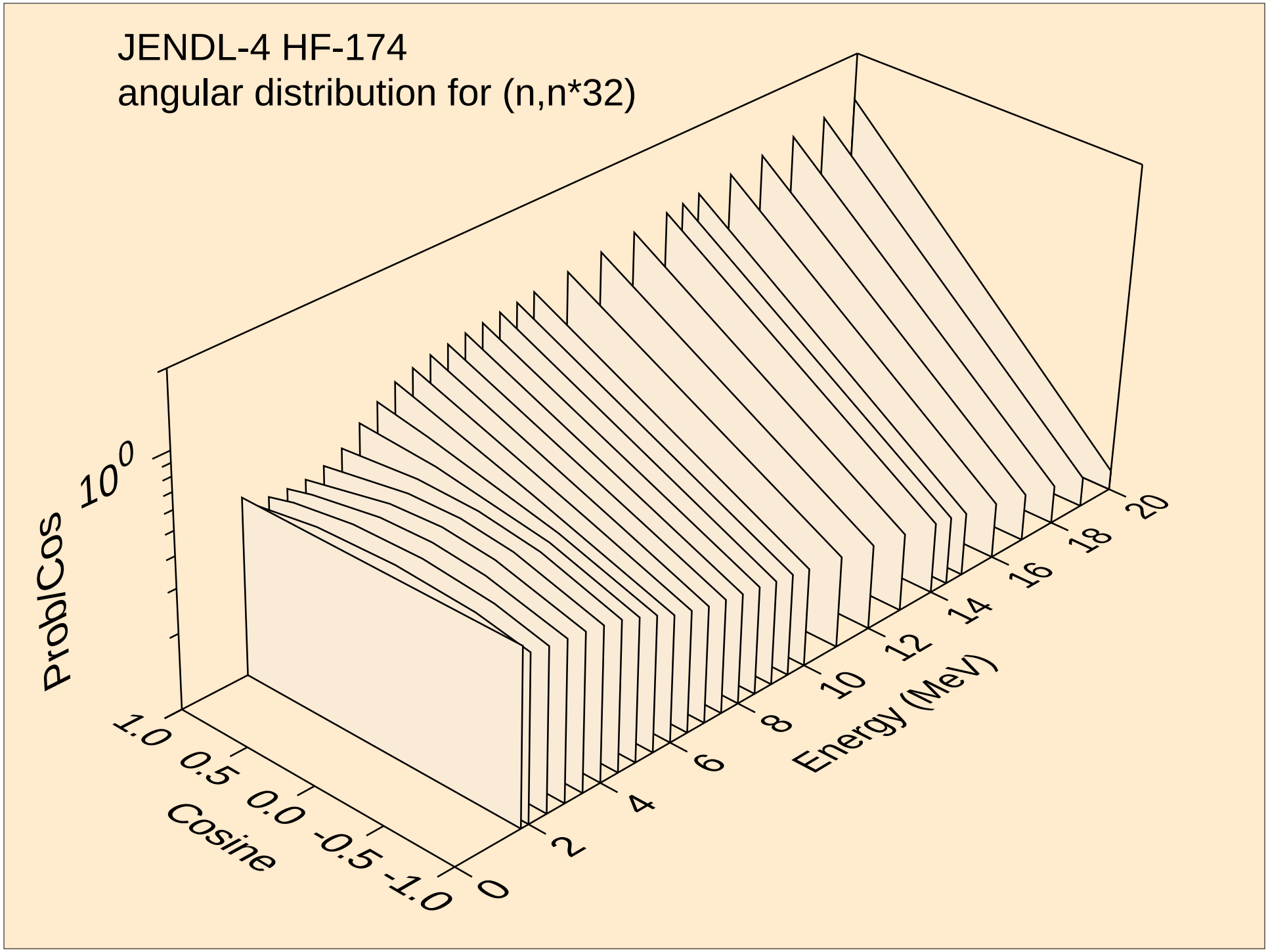
JENDL-4 HF-174
angular distribution for (n,n*32)
ProblCos
10^0
1.0
0.5
0.0
-0.5
-1.0
Cosine
0
2
4
6
8
10
12
14
16
18
20
Energy (MeV)

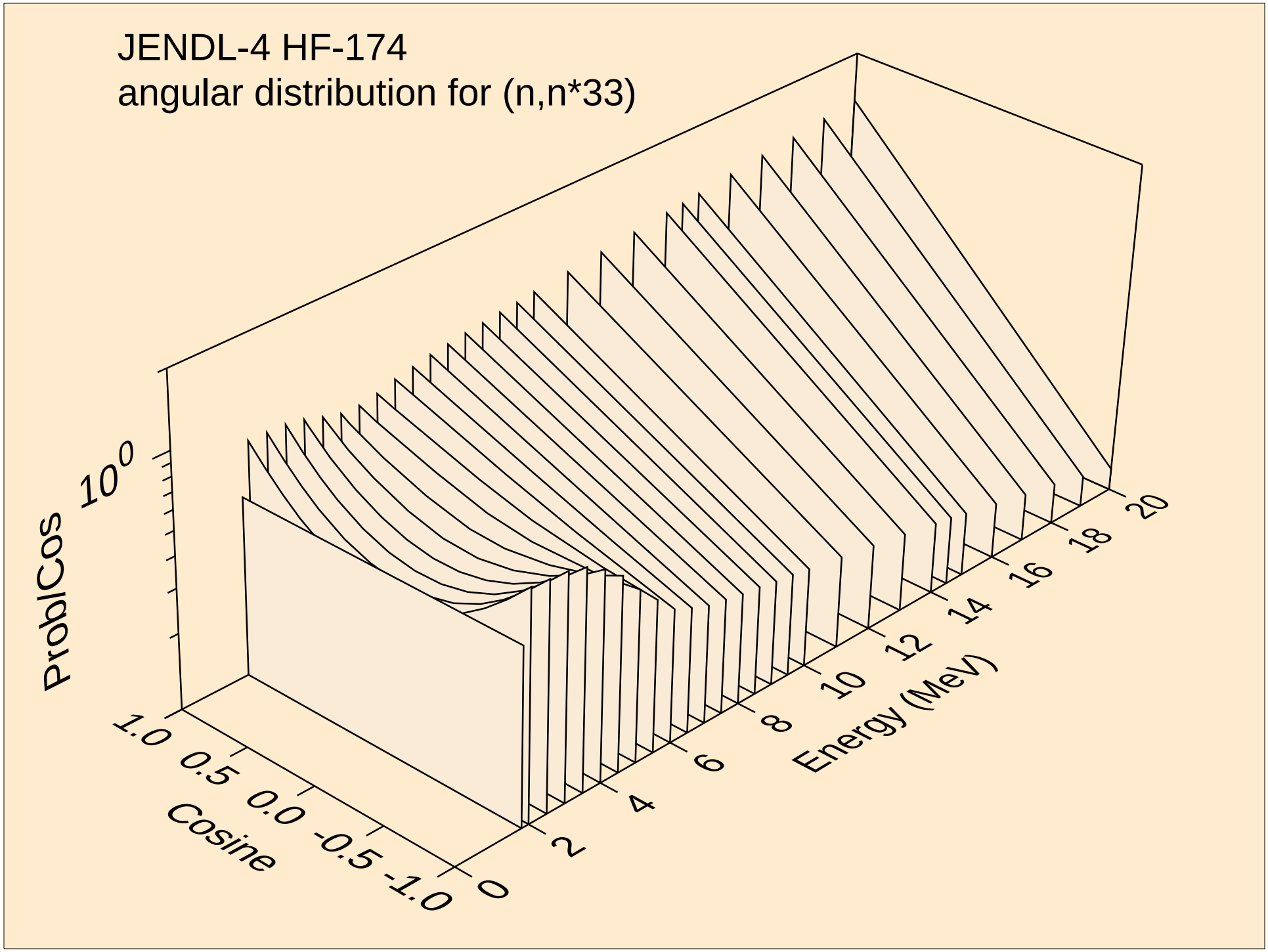
JENDL-4 HF-174
angular distribution for (n,n*33)
ProblCos
10^0
Cosine
1.0
0.5
0.0
-0.5
-1.0
Energy (MeV)
0
2
4
6
8
10
12
14
16
18
20

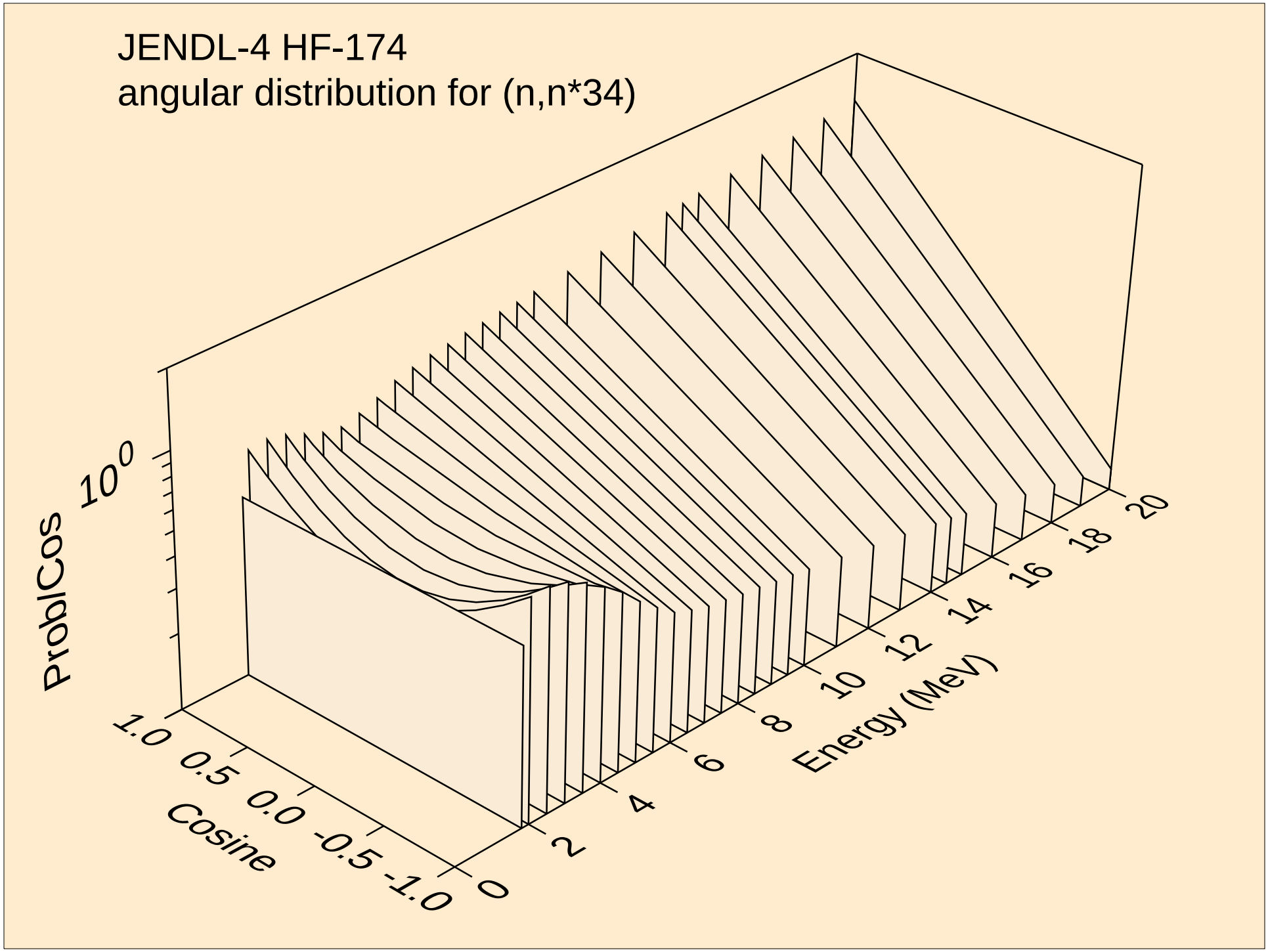
JENDL-4 HF-174
angular distribution for (n,n*34)
ProblCos
10^0
Cosine
1.0
0.5
0.0
-0.5
-1.0
Energy (MeV)
0
2
4
6
8
10
12
14
16
18
20

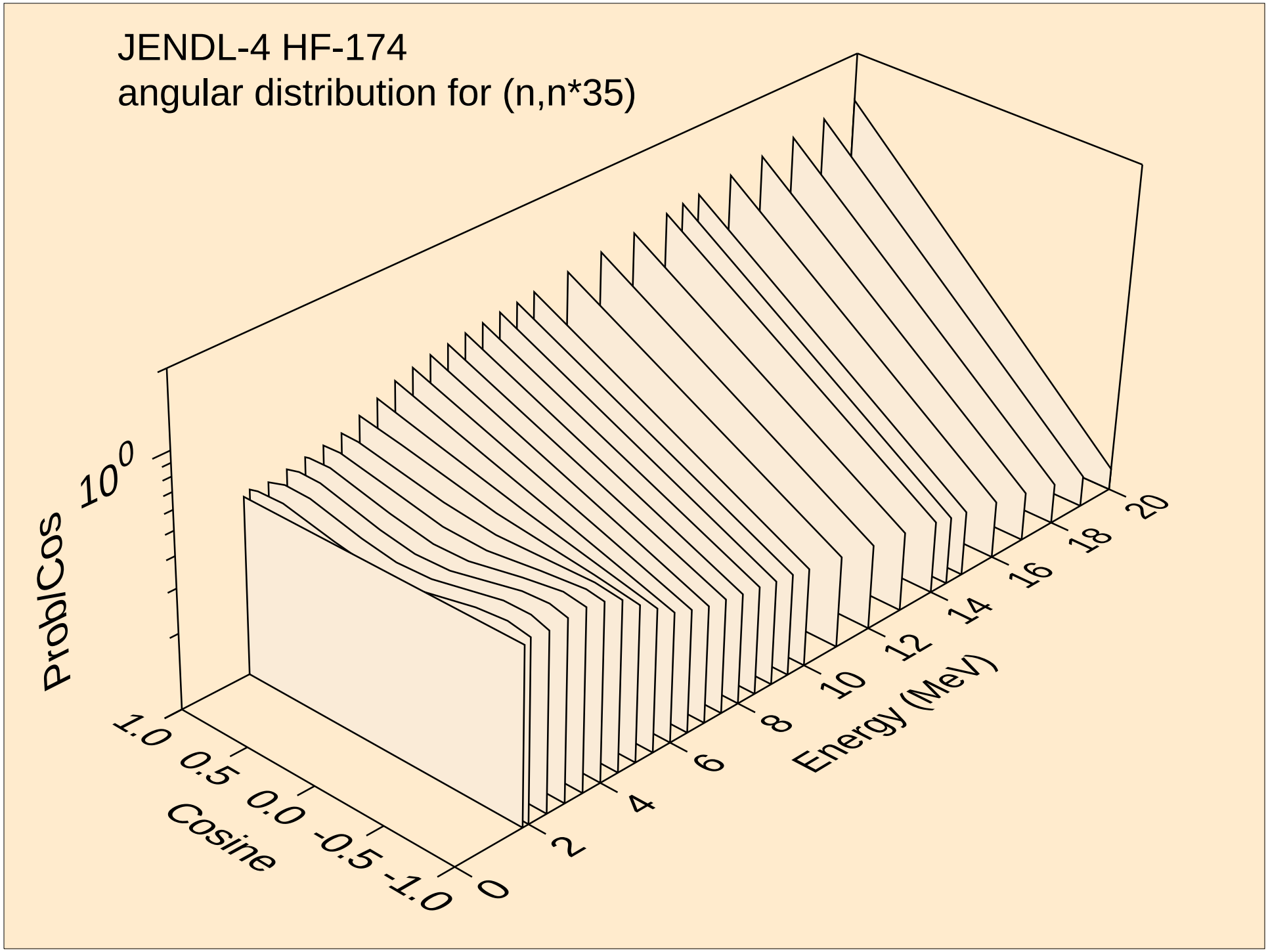
JENDL-4 HF-174
angular distribution for (n,n*35)
ProblCos
10^0
Cosine
1.0
0.5
0.0
-0.5
-1.0
Energy (MeV)
0
2
4
6
8
10
12
14
16
18
20

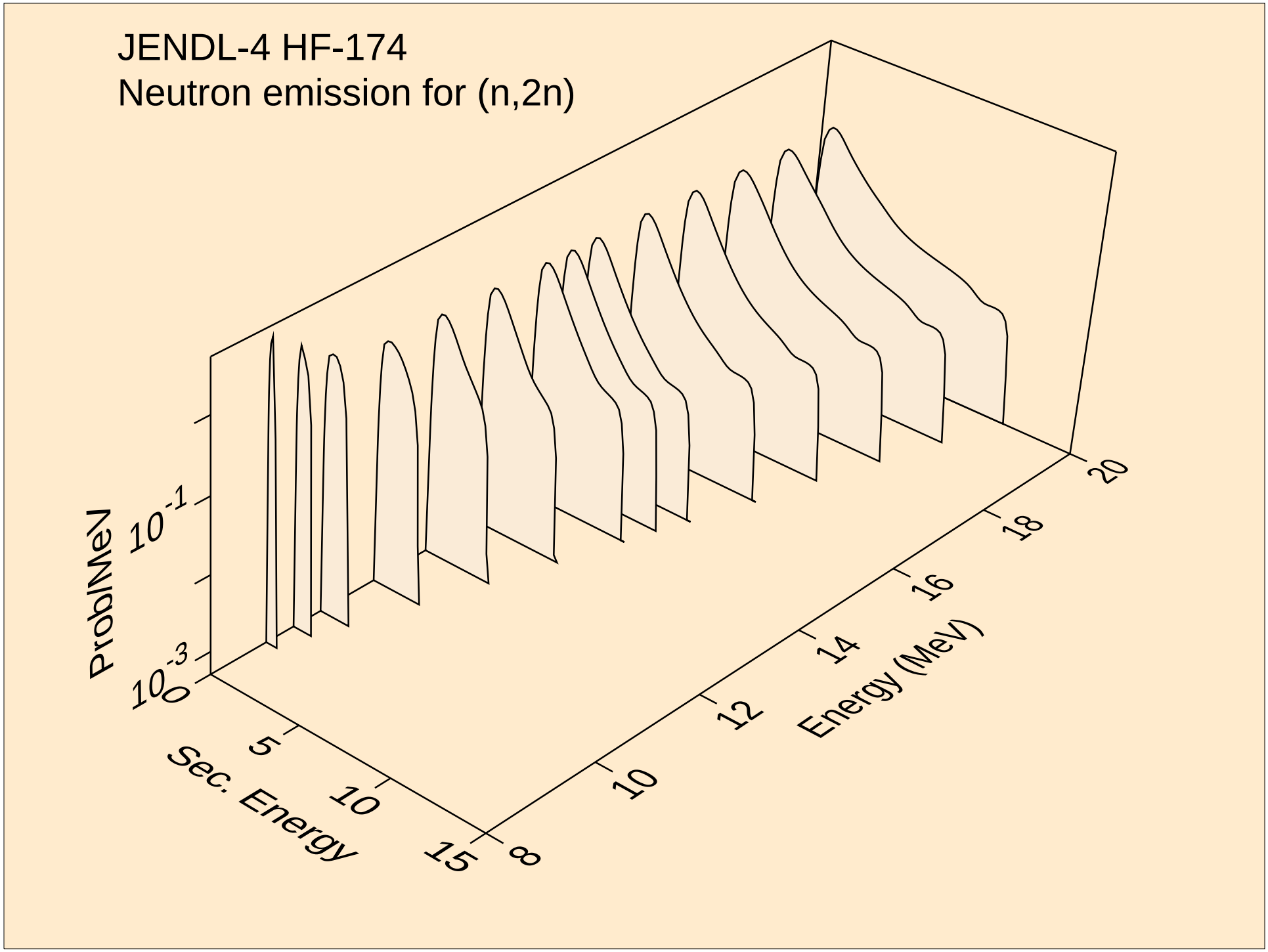
JENDL-4 HF-174
Neutron emission for (n,2n)
Prob/MeV
10^{-1}
10^{-3}
0
5
10
15
Sec. Energy
8
10
12
14
16
18
20
Energy (MeV)

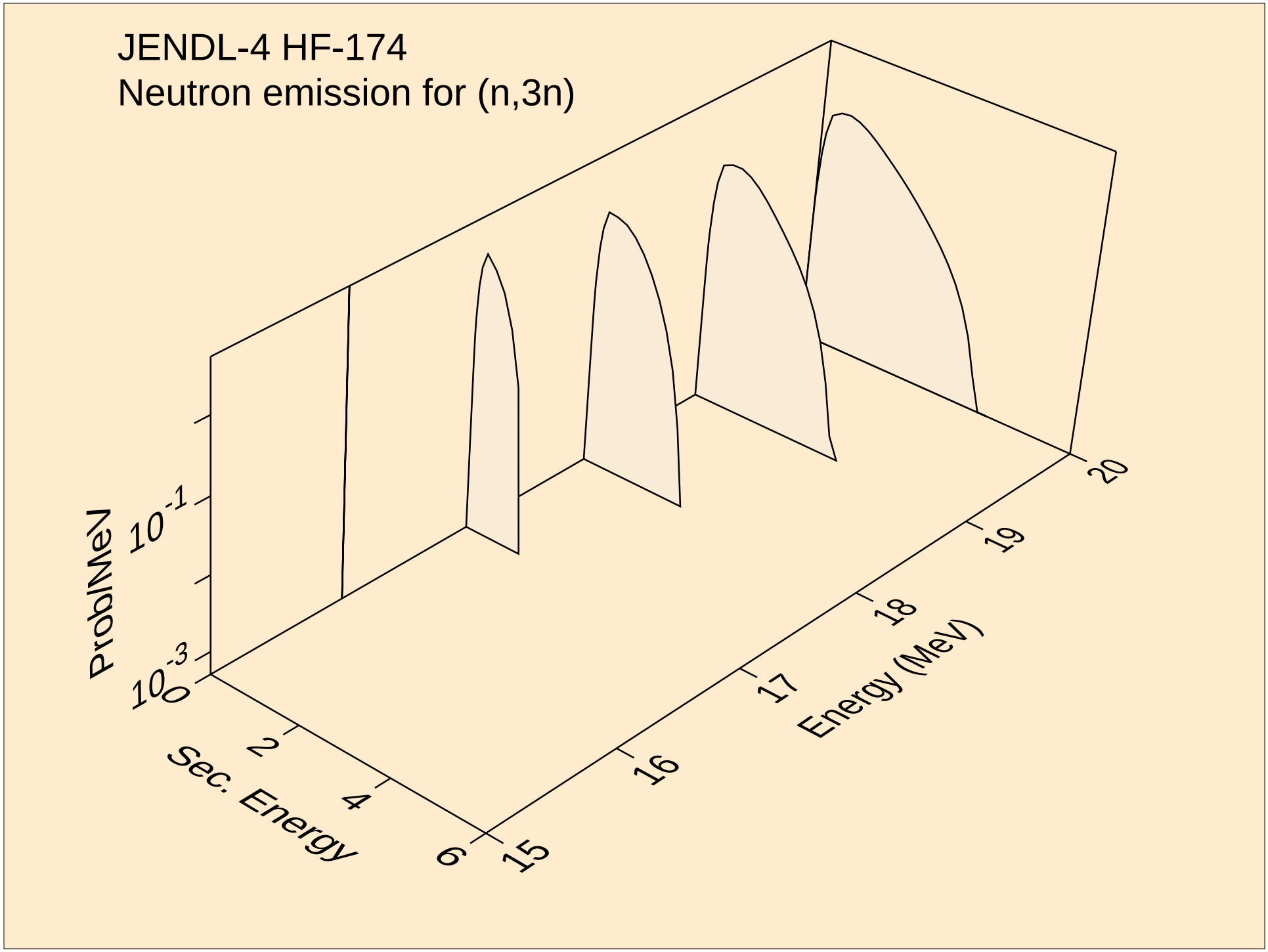
JENDL-4 HF-174
Neutron emission for (n,3n)
Prob/MeV
10^{-1}
10^{-3}
0
2
4
6
Sec. Energy
15
16
17
18
19
20
Energy (MeV)

JENDL-4 HF-174
Neutron emission for (n,n*)a

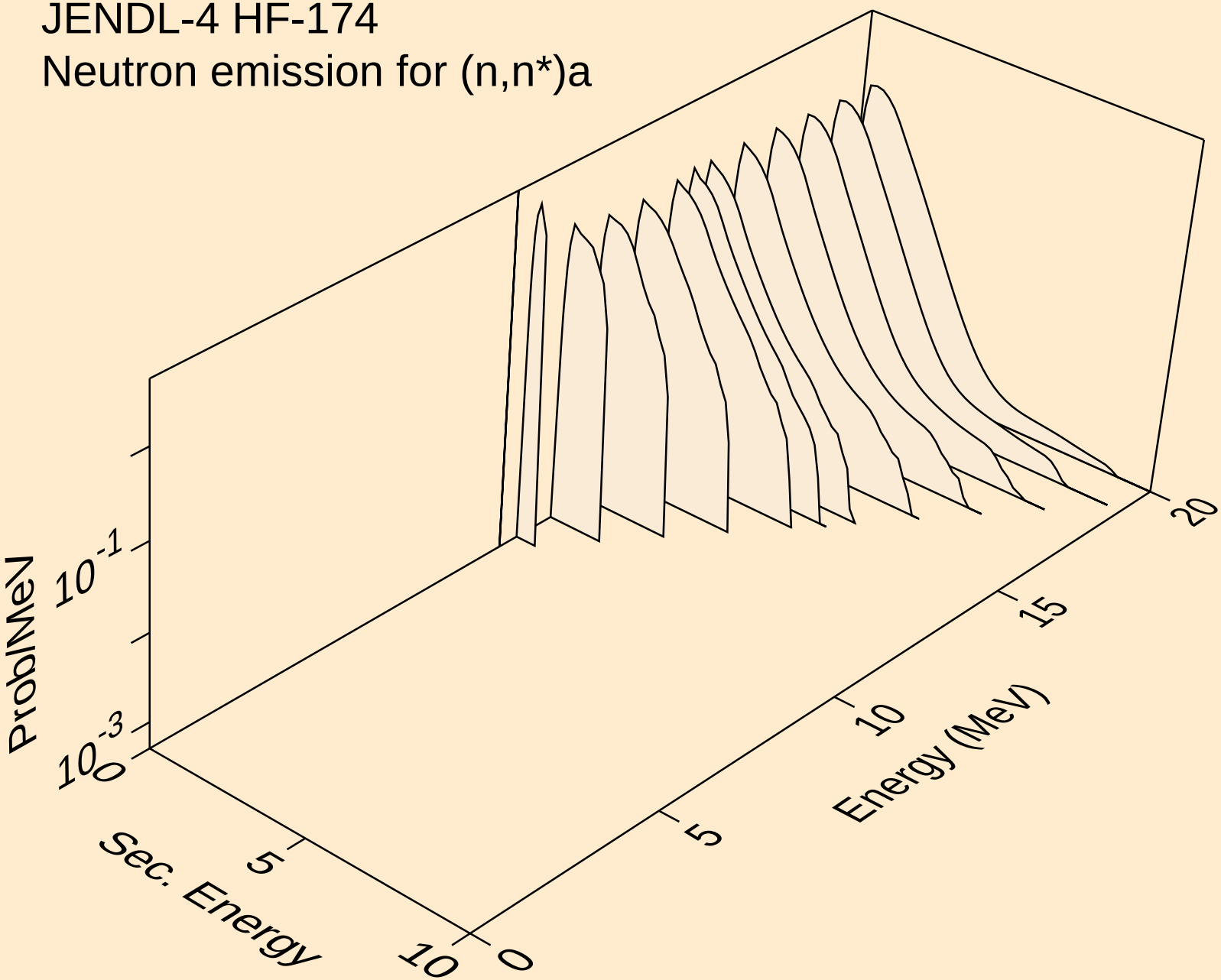

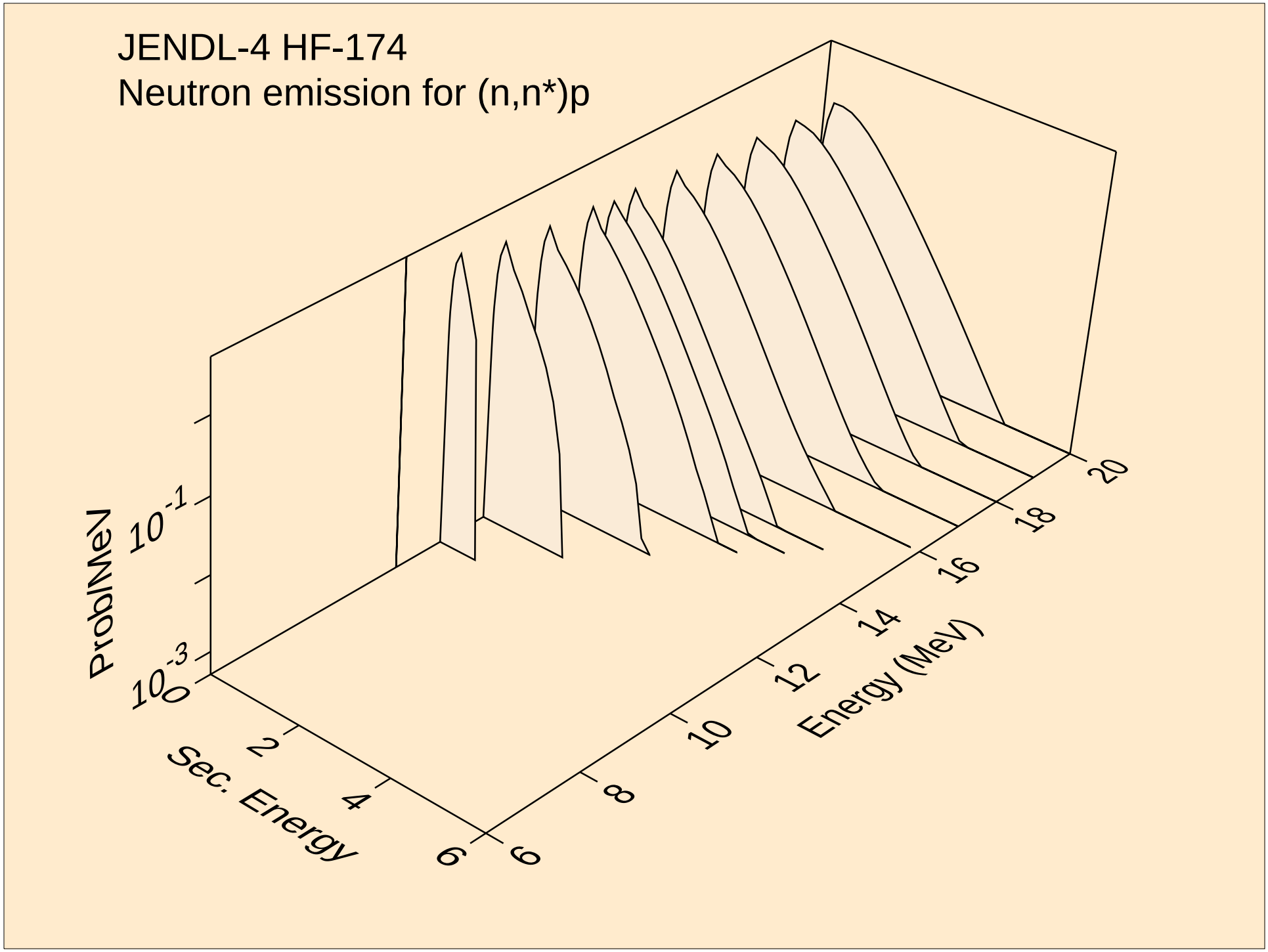
JENDL-4 HF-174
Neutron emission for (n,n*)p
Prob/MeV
10^{-1}
10^{-3}
0
2
4
6
Sec. Energy
6
8
10
12
14
16
18
20
Energy (MeV)

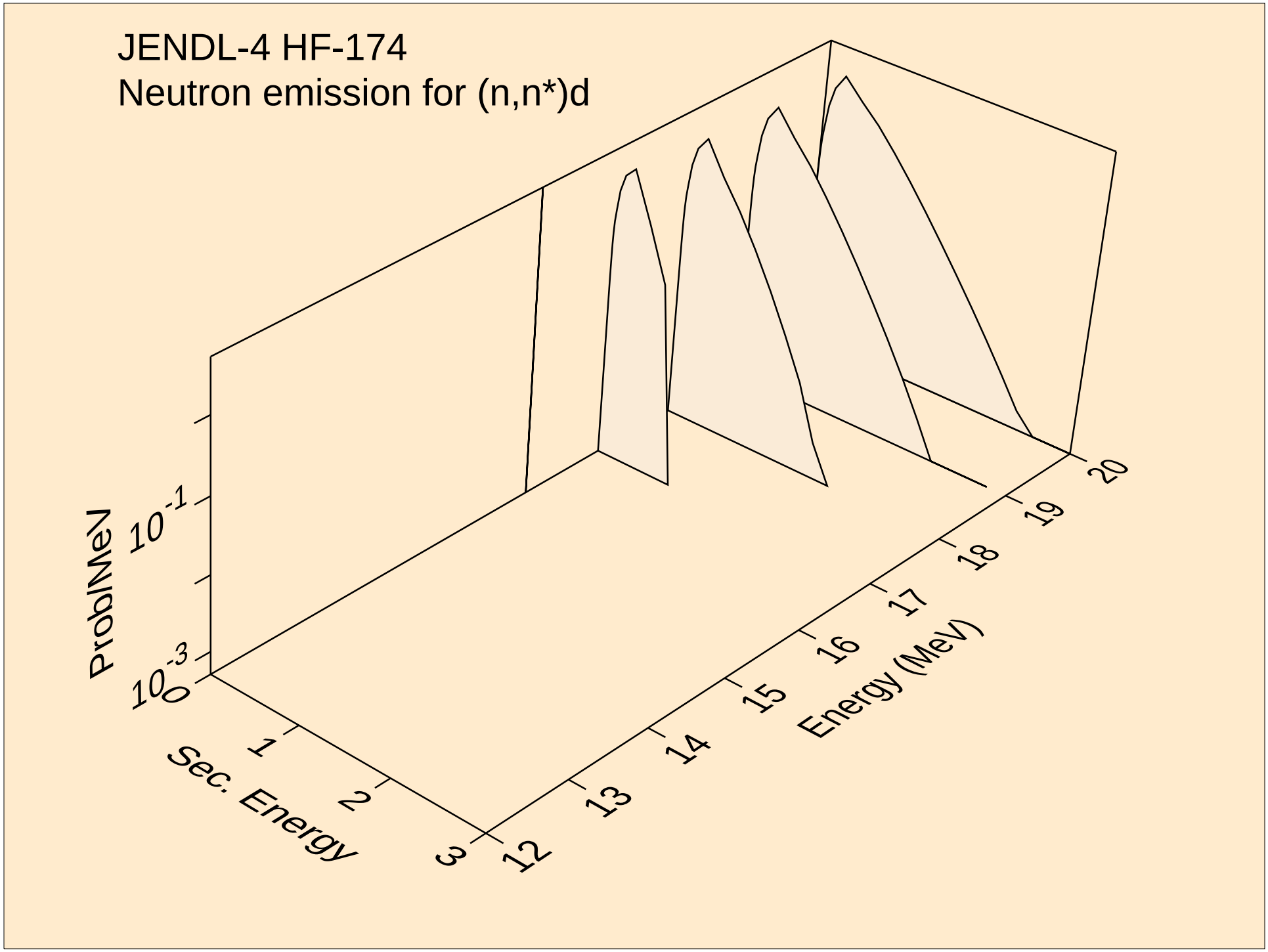
JENDL-4 HF-174
Neutron emission for (n,n*)d
Prob/MeV
10^{-1}
10^{-3}
0
1
2
3
Sec. Energy
12
13
14
15
16
17
18
19
20
Energy (MeV)

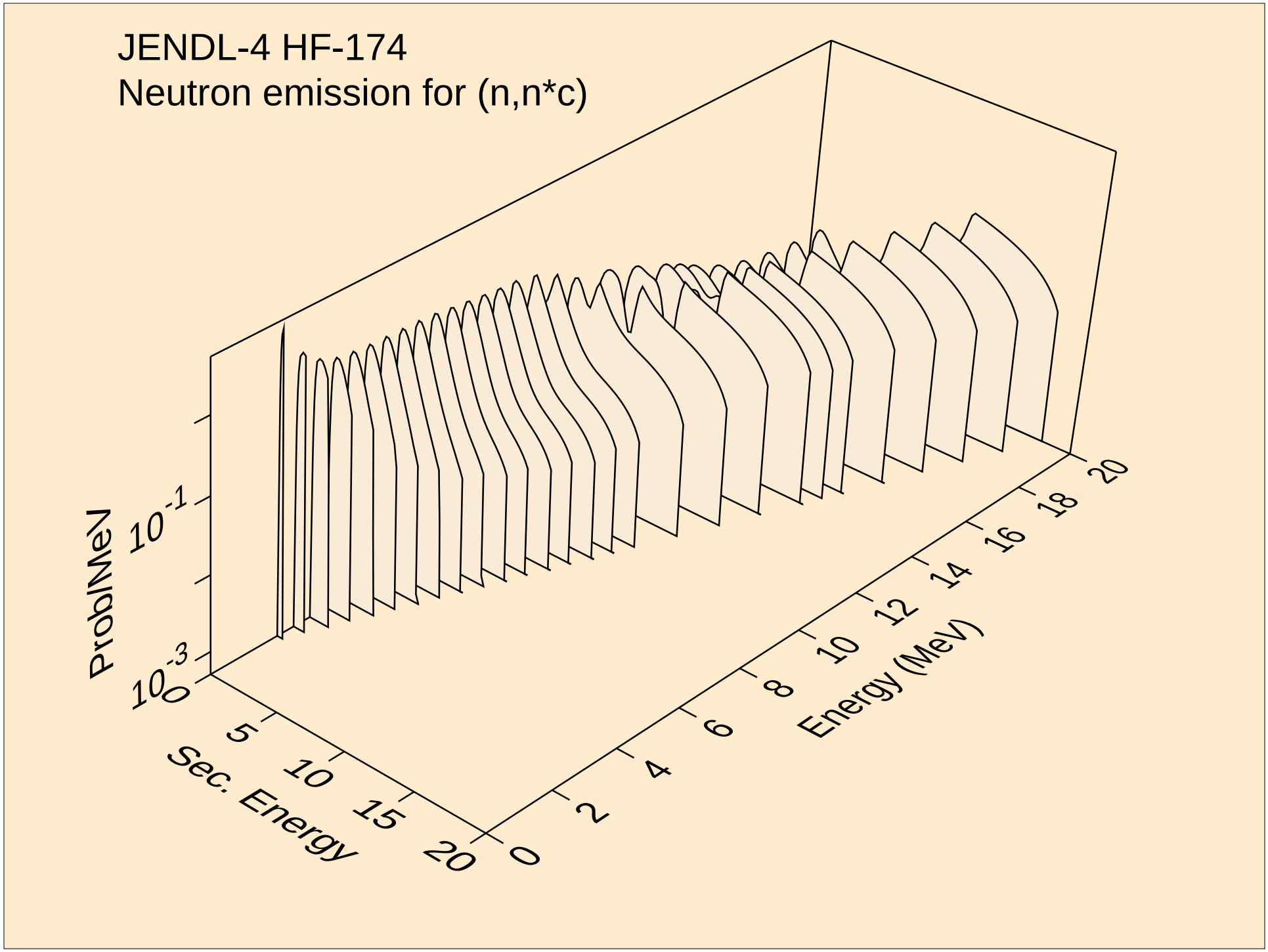
JENDL-4 HF-174
Neutron emission for (n,n*c)
Prob/MeV
10^{-1}
10^{-3}
0
5
10
15
20
Sec. Energy
0
2
4
6
8
10
12
14
16
18
20
Energy (MeV)

JENDL-4 HF-174
Photon emission for nonelastic

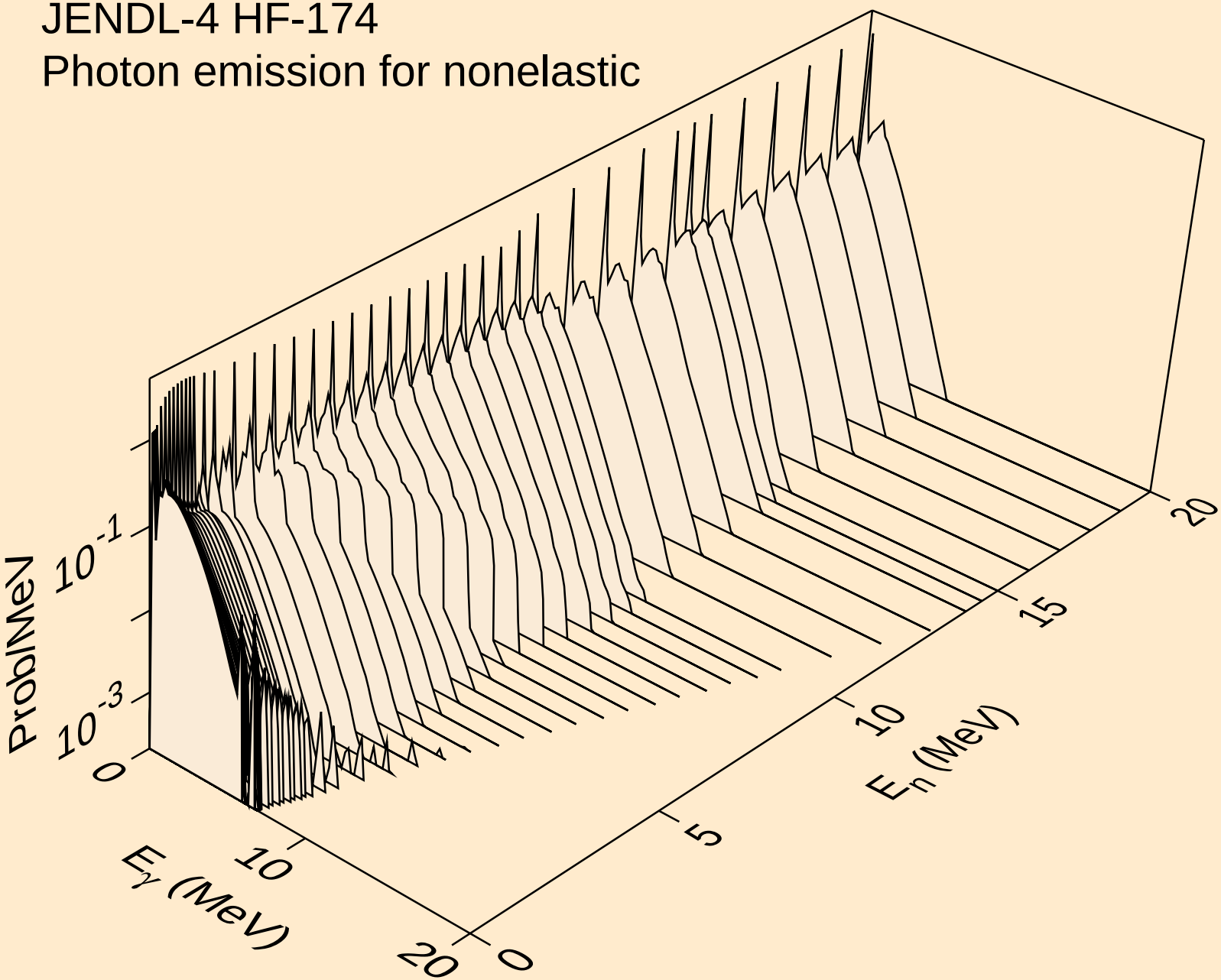

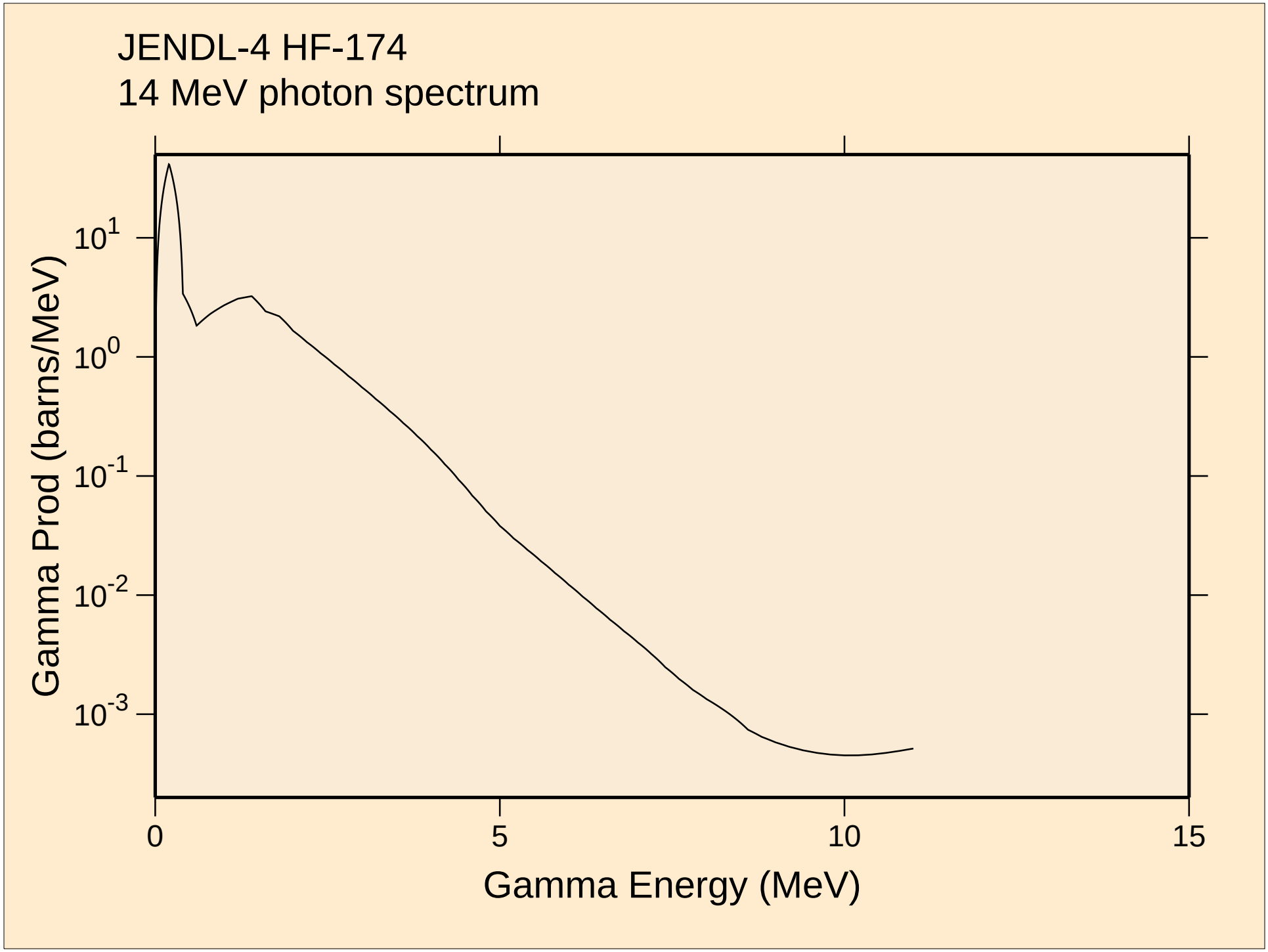
JENDL-4 HF-174
14 MeV photon spectrum
Gamma Prod (barns/MeV)
10^1
10^0
10^-1
10^-2
10^-3
0
5
10
15
Gamma Energy (MeV)

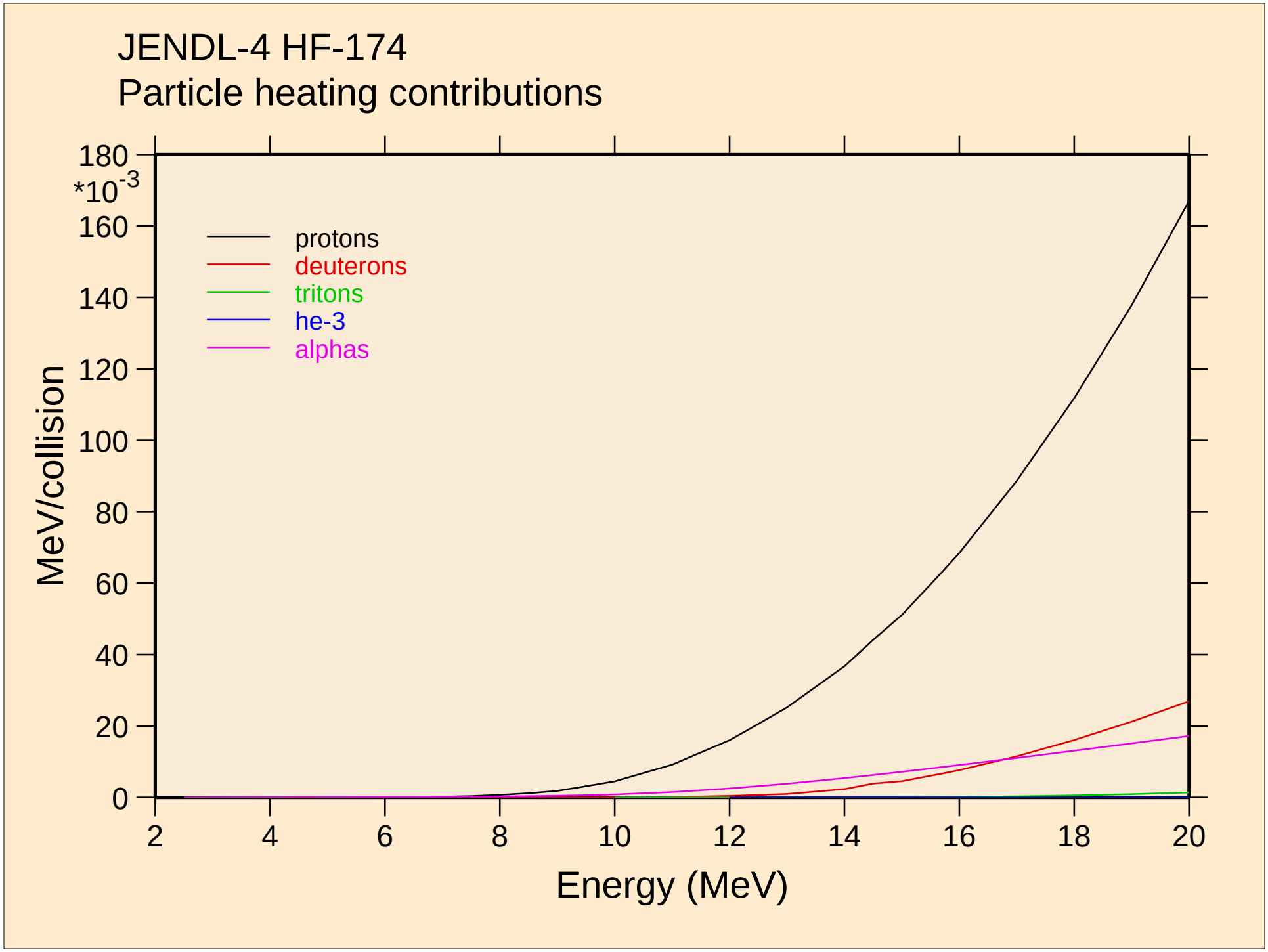
JENDL-4 HF-174
Particle heating contributions
*10-3
180
160
140
120
100
80
60
40
20
0
MeV/collision
protons
deuterons
tritons
he-3
alphas
2
4
6
8
10
12
14
16
18
20
Energy (MeV)

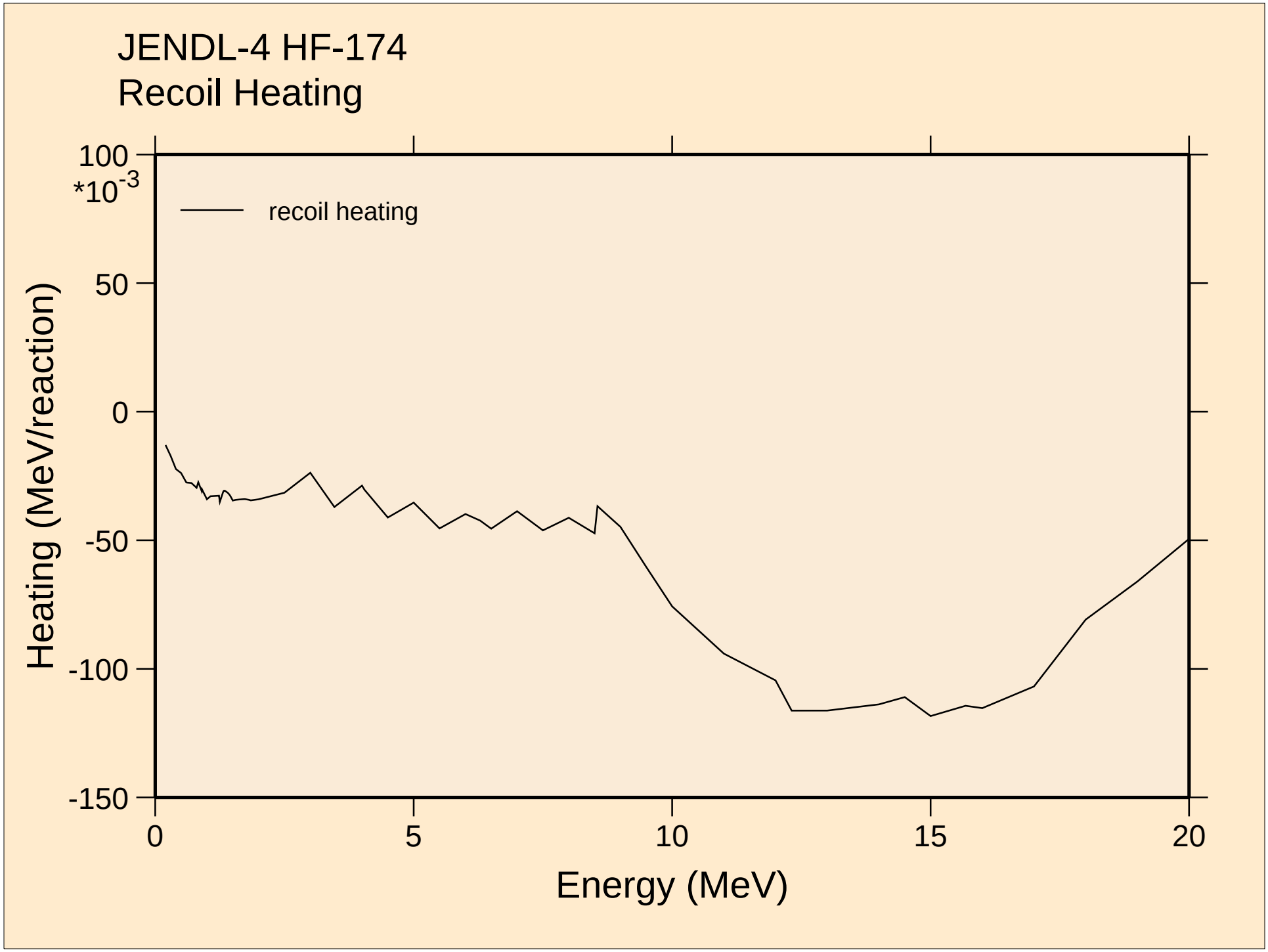
JENDL-4 HF-174
Recoil Heating
recoil heating
Heating (MeV/reaction)
*10-3
100
50
0
-50
-100
-150
0
5
10
15
20
Energy (MeV)

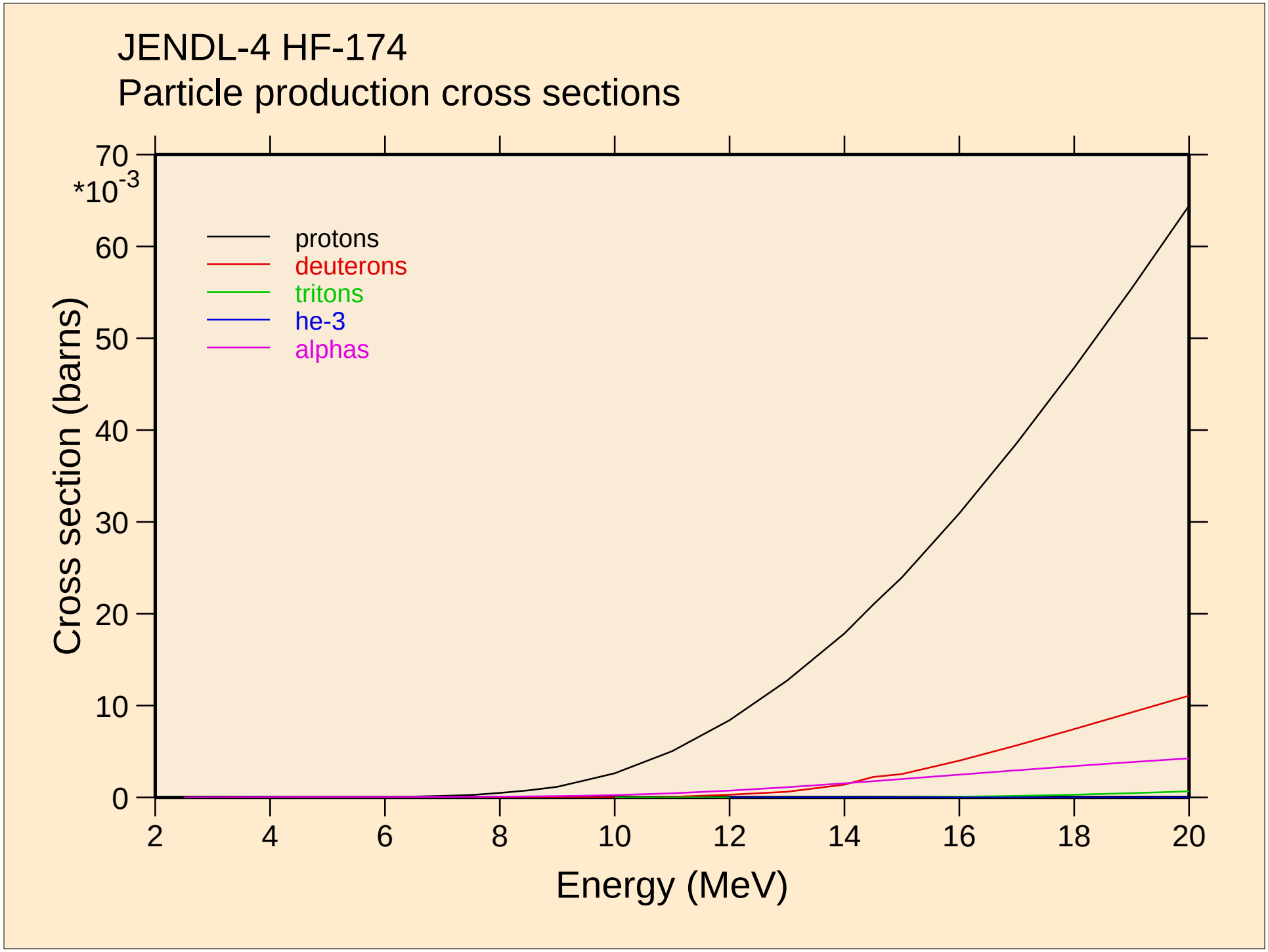
JENDL-4 HF-174
Particle production cross sections
Cross section (barns)
*10^-3
70
60
50
40
30
20
10
0
2
4
6
8
10
12
14
16
18
20
Energy (MeV)
protons
deuterons
tritons
he-3
alphas

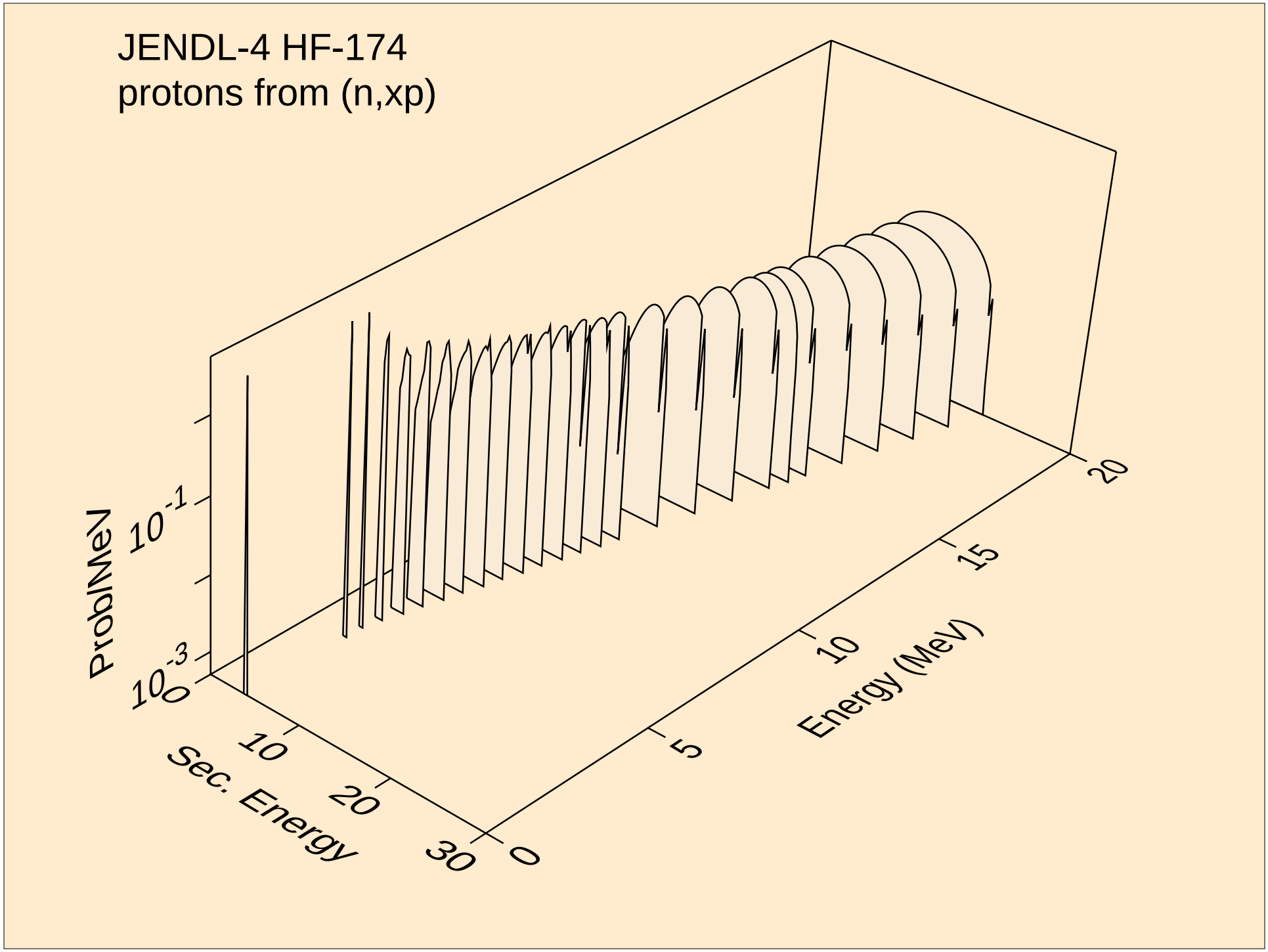
JENDL-4 HF-174
protons from (n,xp)
Prob/MeV
10^{-1}
10^{-3}
0
10
20
30
Sec. Energy
0
5
10
15
20
Energy (MeV)

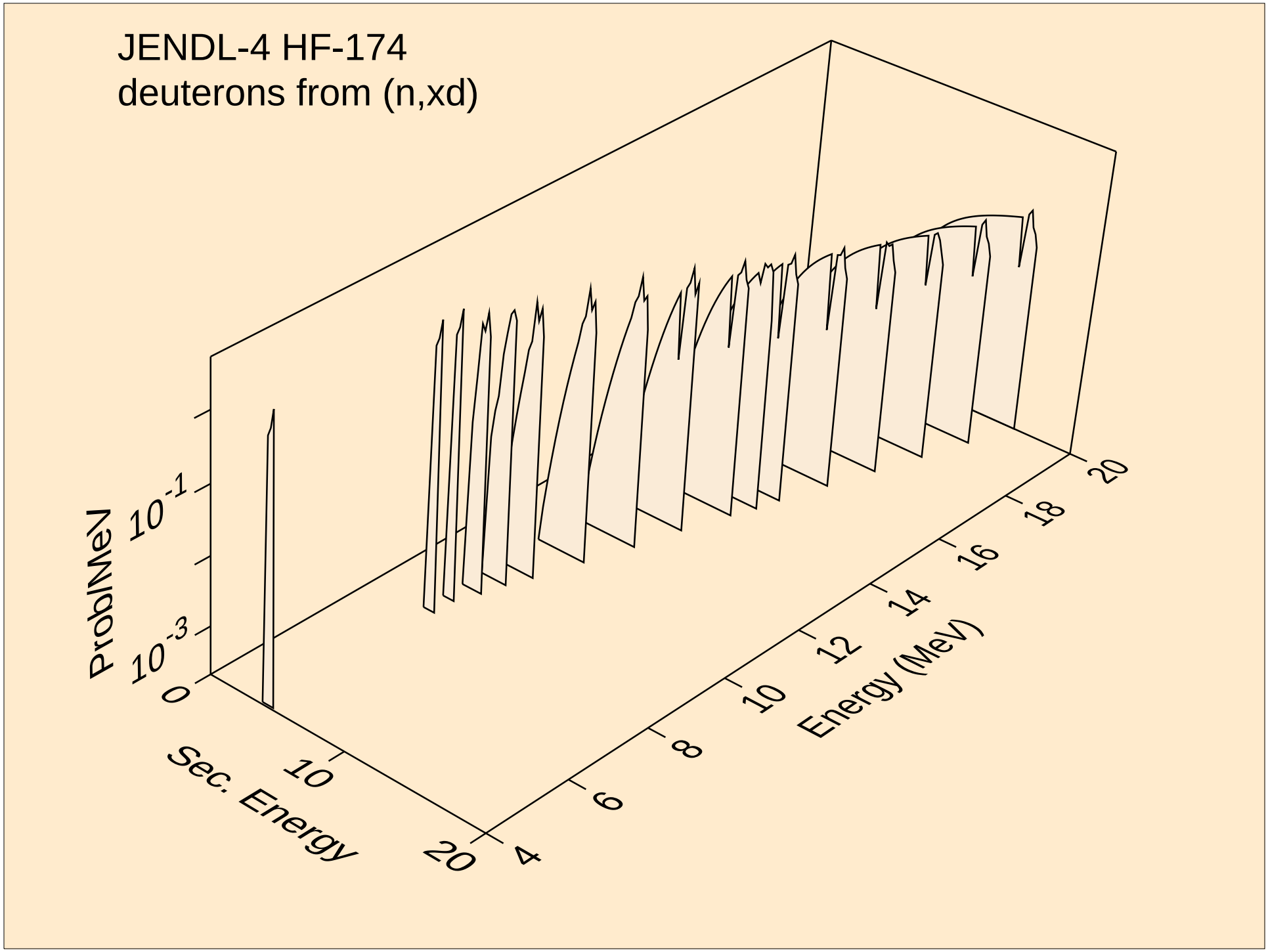
JENDL-4 HF-174
deuterons from (n,xd)
Prob/MeV
10^-1
10^-3
0
Sec. Energy
10
20
4
6
8
10
12
14
16
18
20
Energy (MeV)

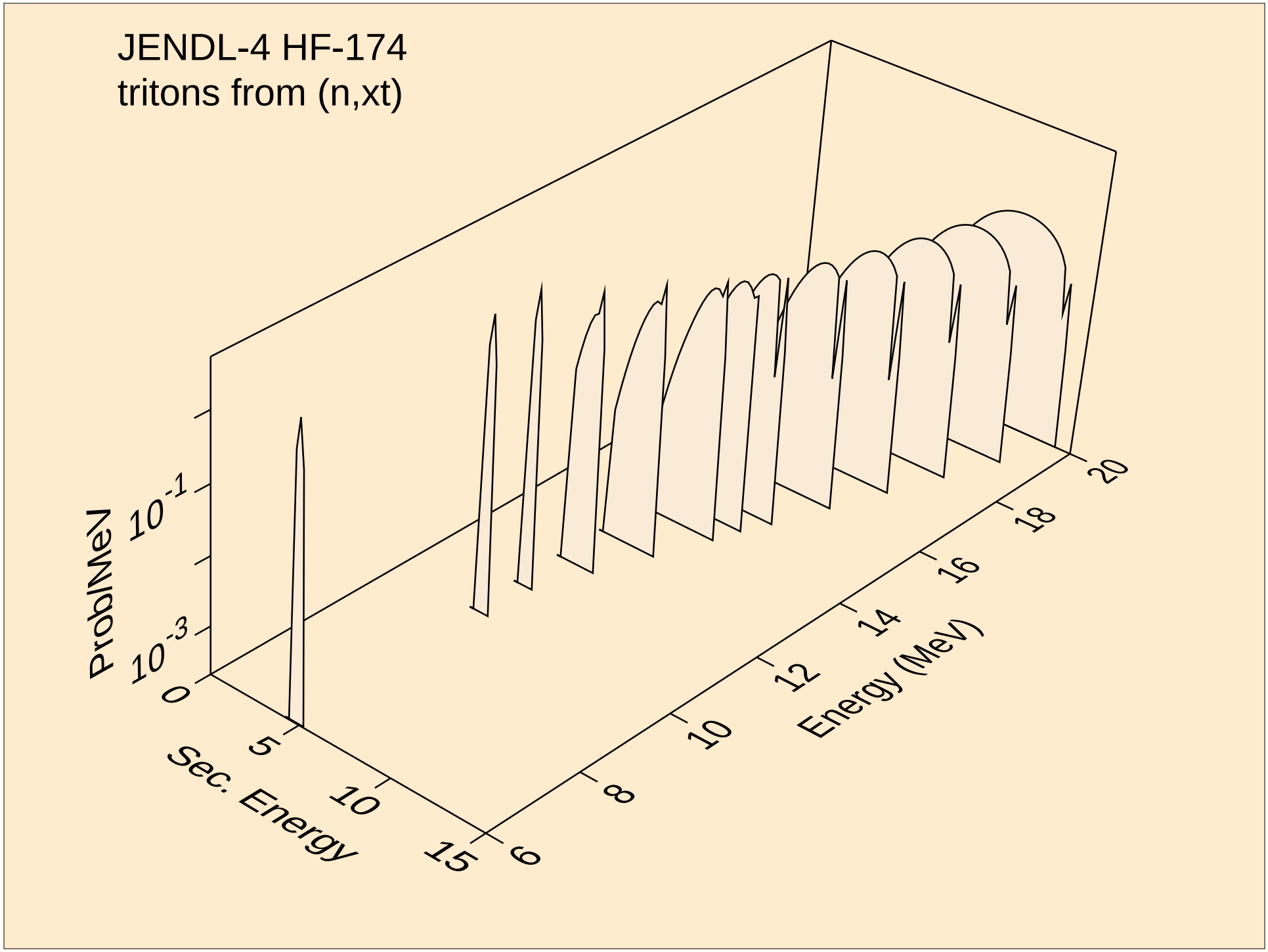
JENDL-4 HF-174
tritons from (n,xt)
Prob/MeV
10^{-1}
10^{-3}
0
Sec. Energy
5
10
15
Energy (MeV)
6
8
10
12
14
16
18
20

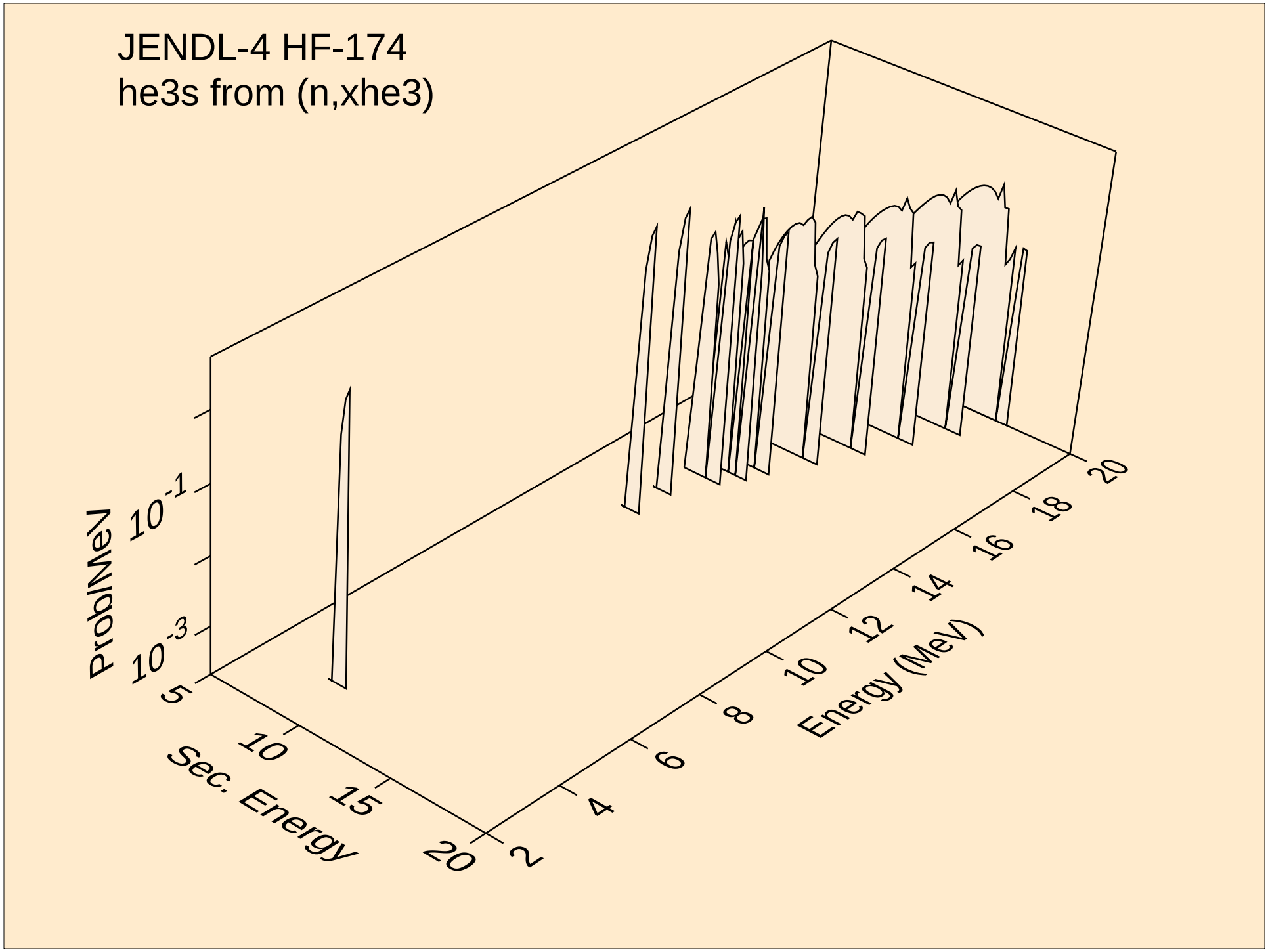
JENDL-4 HF-174
he3s from (n,xhe3)
Prob/MeV
10^-1
10^-3
5
10
15
20
Sec. Energy
2
4
6
8
10
12
14
16
18
20
Energy (MeV)

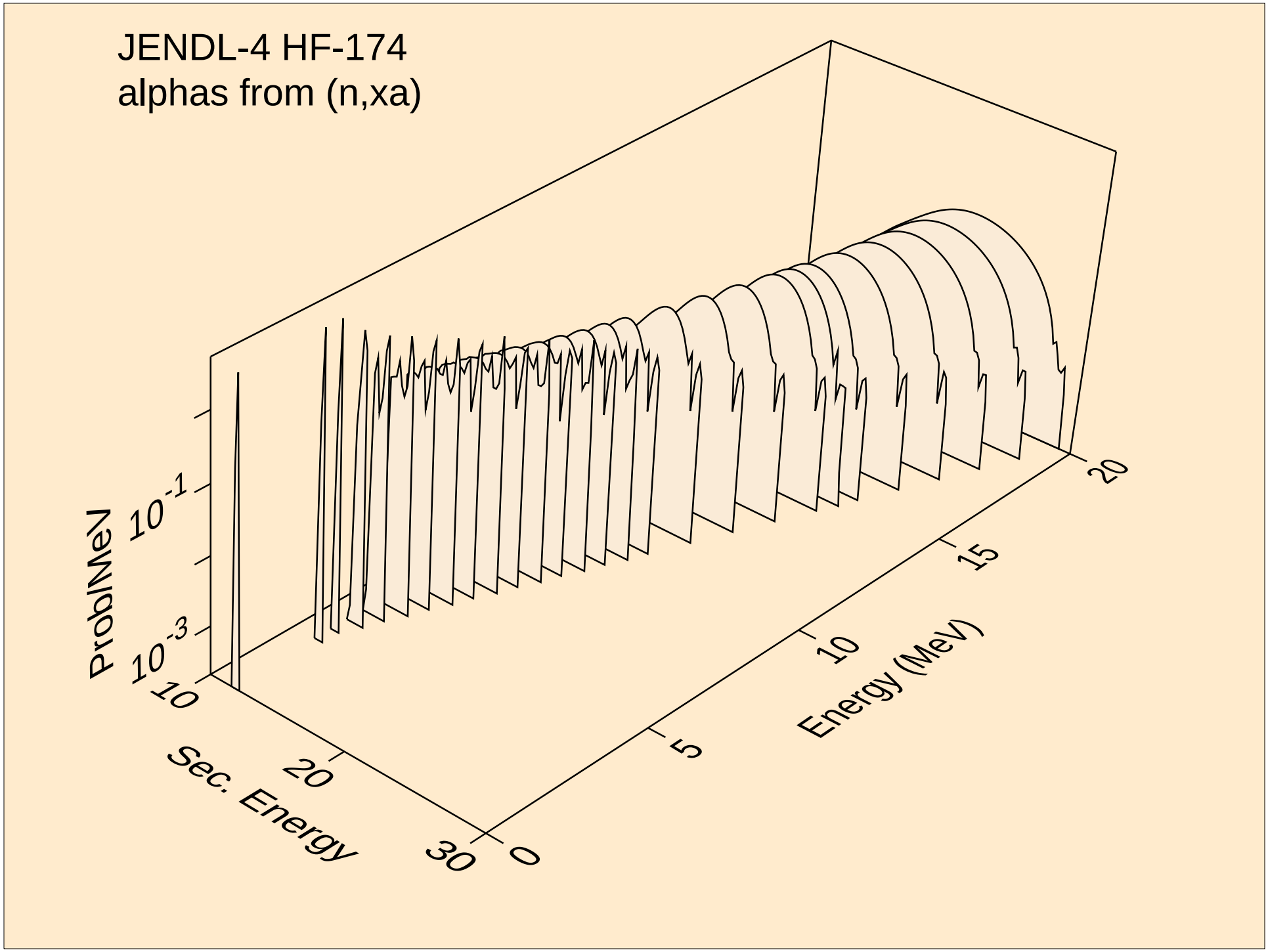
JENDL-4 HF-174
alphas from (n,xa)
Prob/MeV
10^-1
10^-3
10
20
30
Sec. Energy
0
5
10
15
20
Energy (MeV)