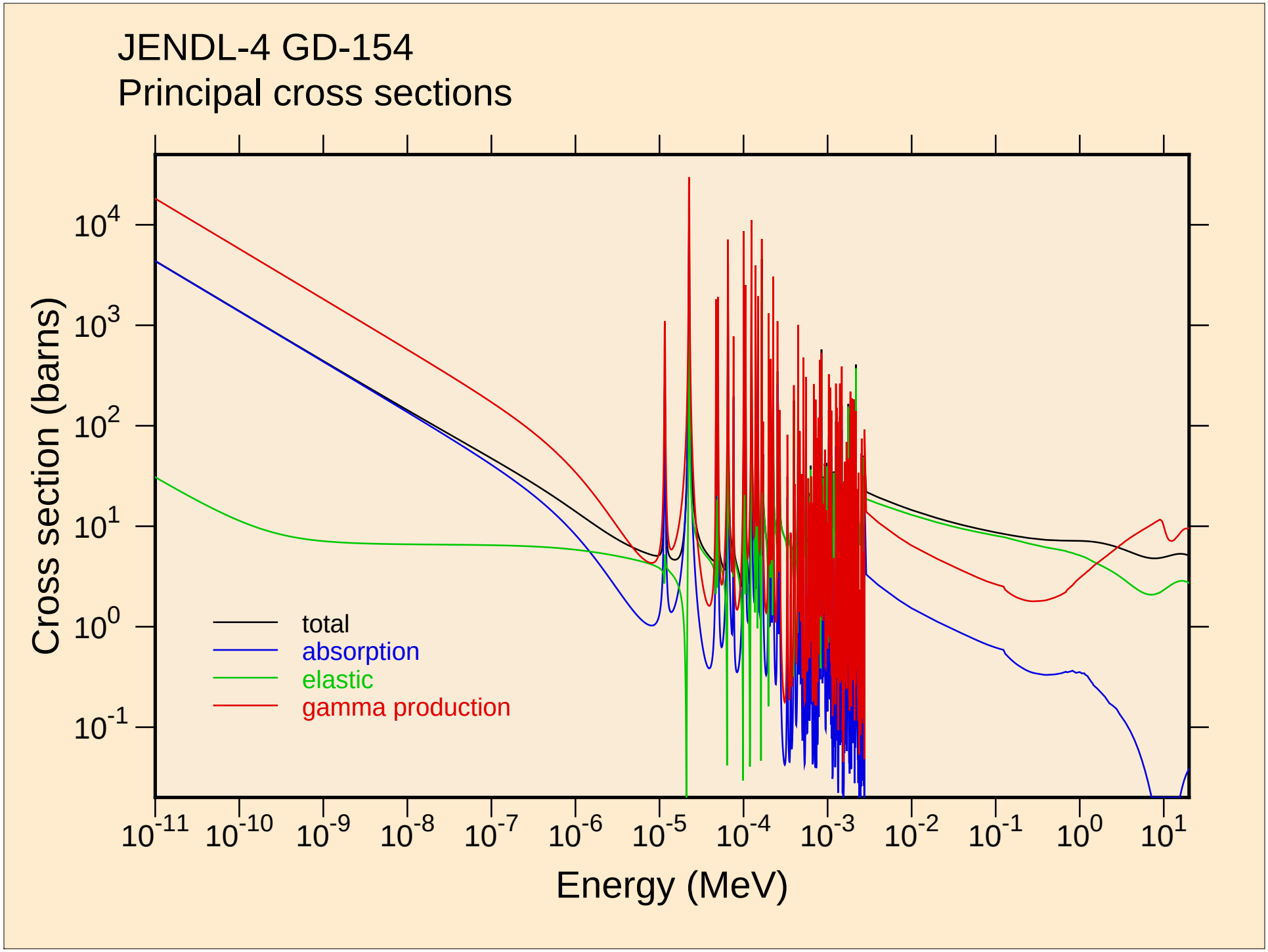
JENDL-4 GD-154
Principal cross sections
Cross section (barns)
Energy (MeV)
total
absorption
elastic
gamma production

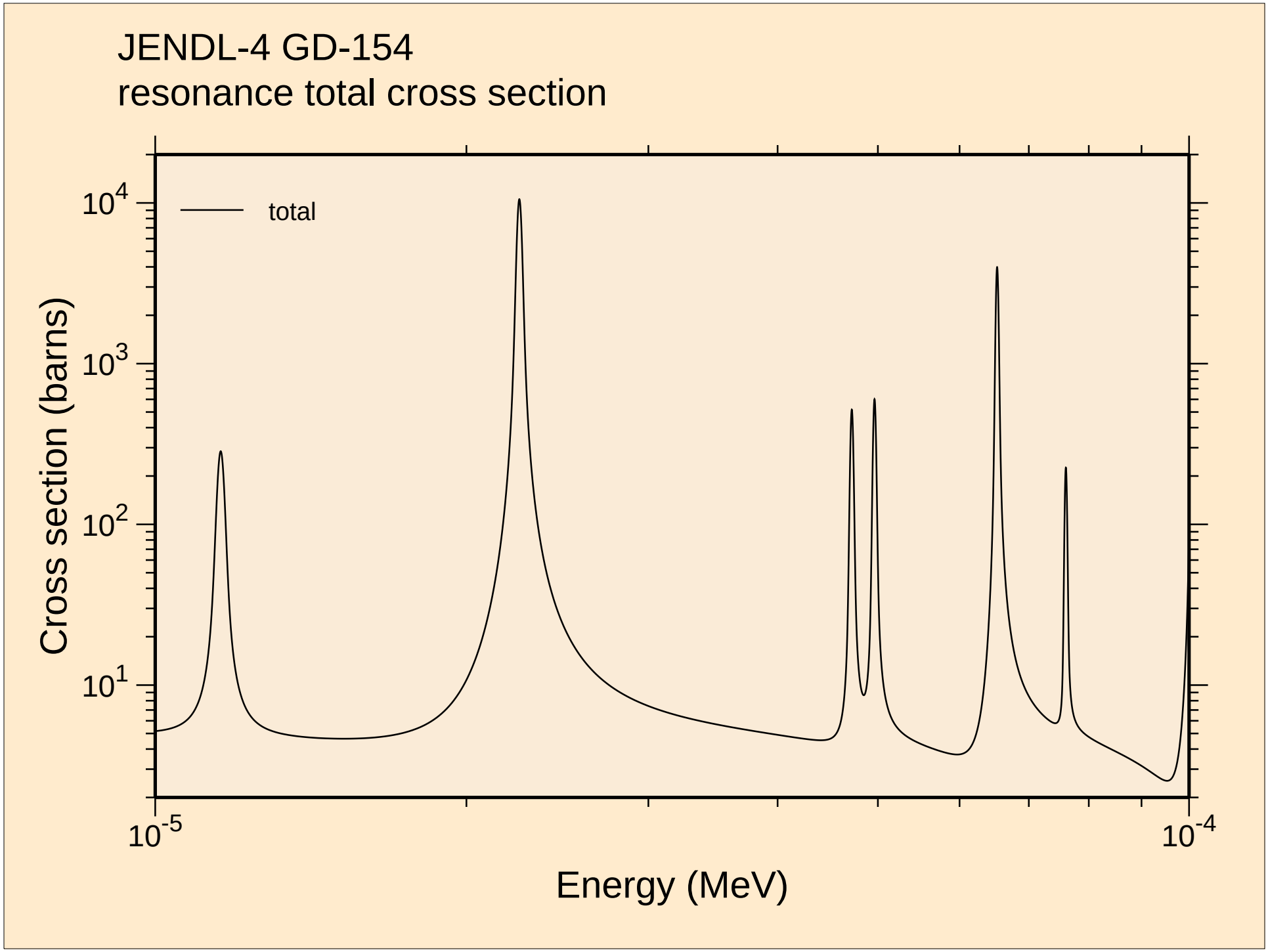
JENDL-4 GD-154
resonance total cross section
total
Cross section (barns)
$10^4$
$10^3$
$10^2$
$10^1$
$10^{-5}$
$10^{-4}$
Energy (MeV)

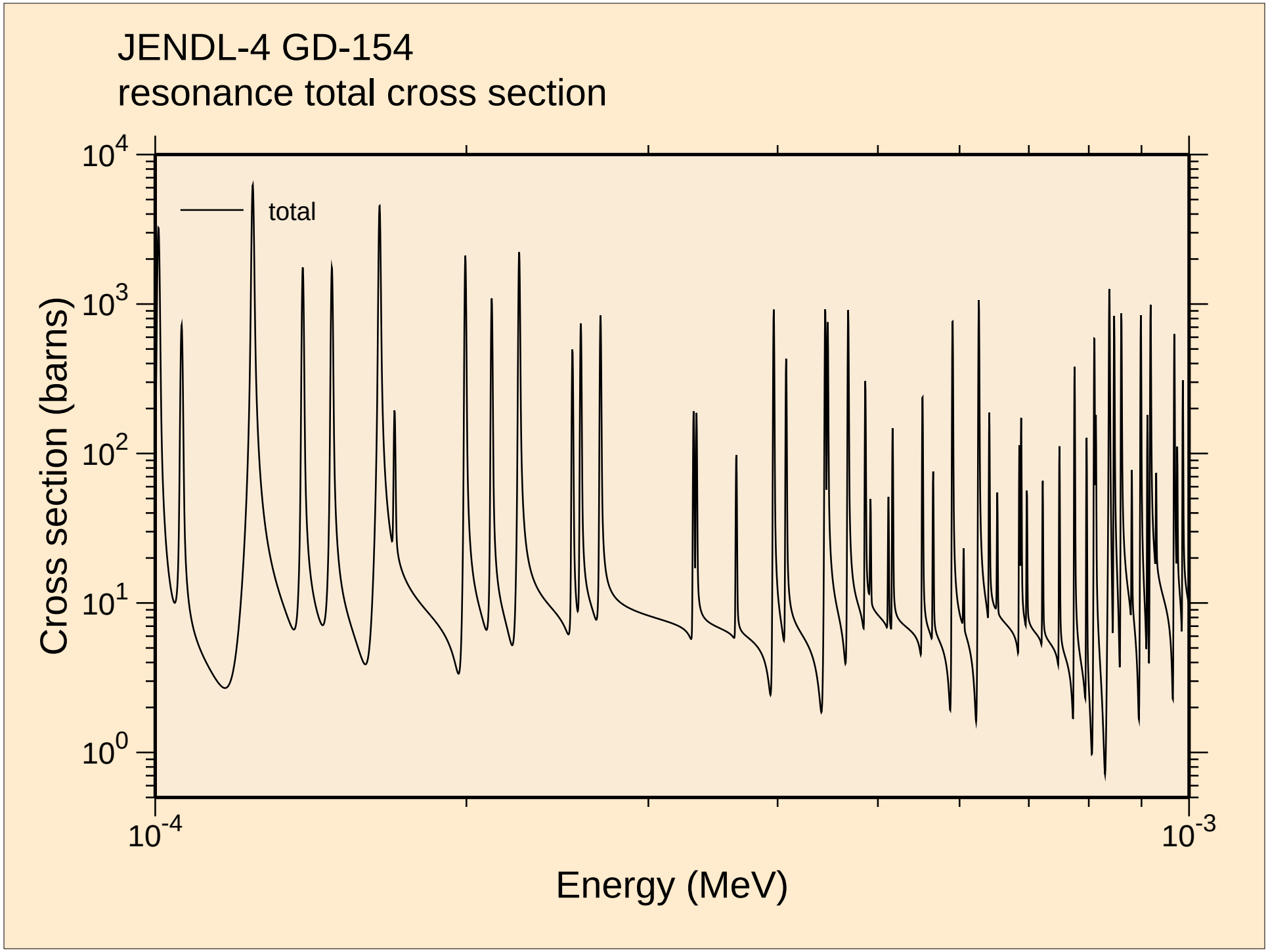
JENDL-4 GD-154
resonance total cross section
total
Cross section (barns)
Energy (MeV)
$10^4$
$10^3$
$10^2$
$10^1$
$10^0$
$10^{-4}$
$10^{-3}$

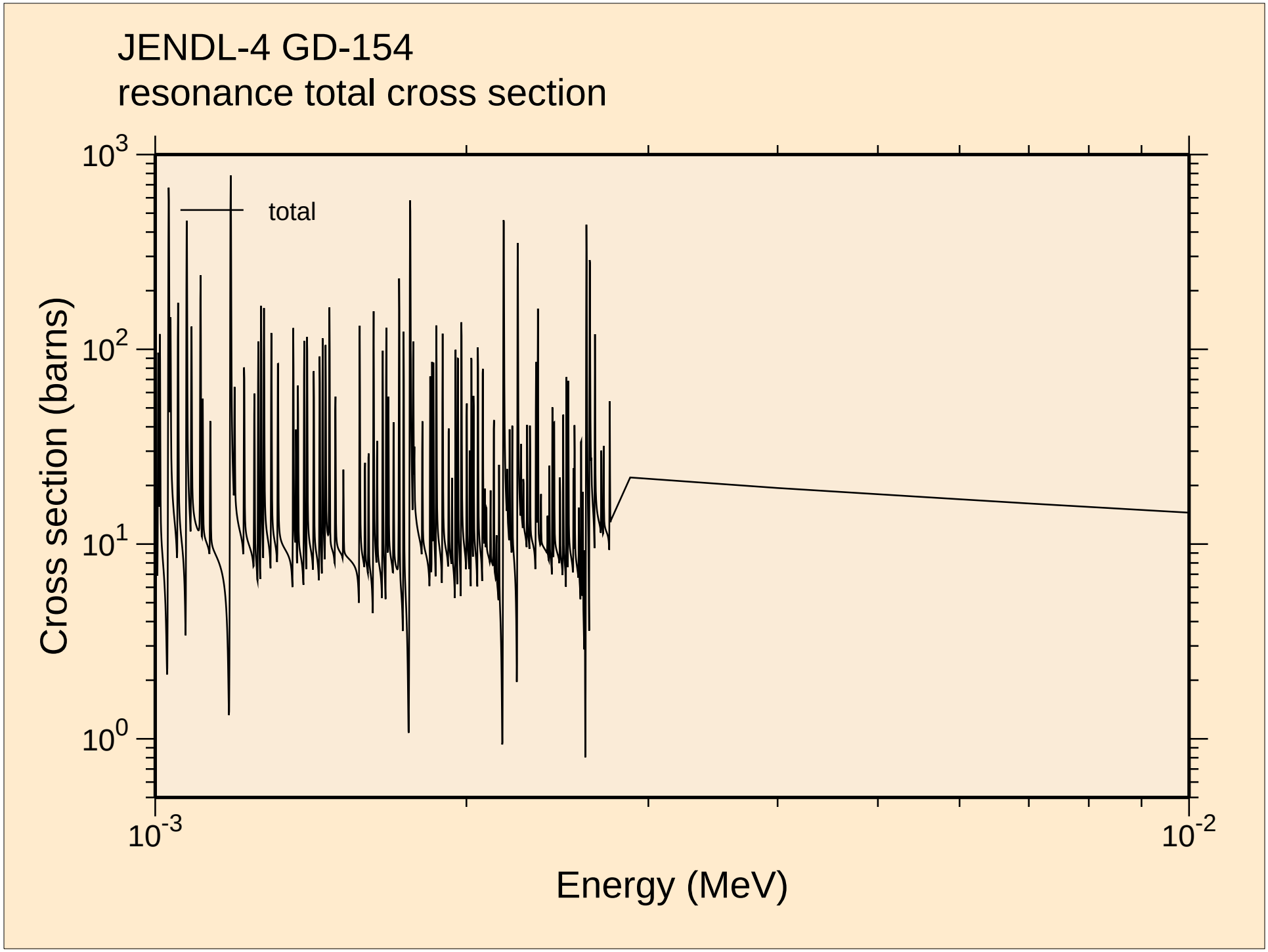
JENDL-4 GD-154
resonance total cross section
total
Cross section (barns)
$10^3$
$10^2$
$10^1$
$10^0$
$10^{-3}$
$10^{-2}$
Energy (MeV)

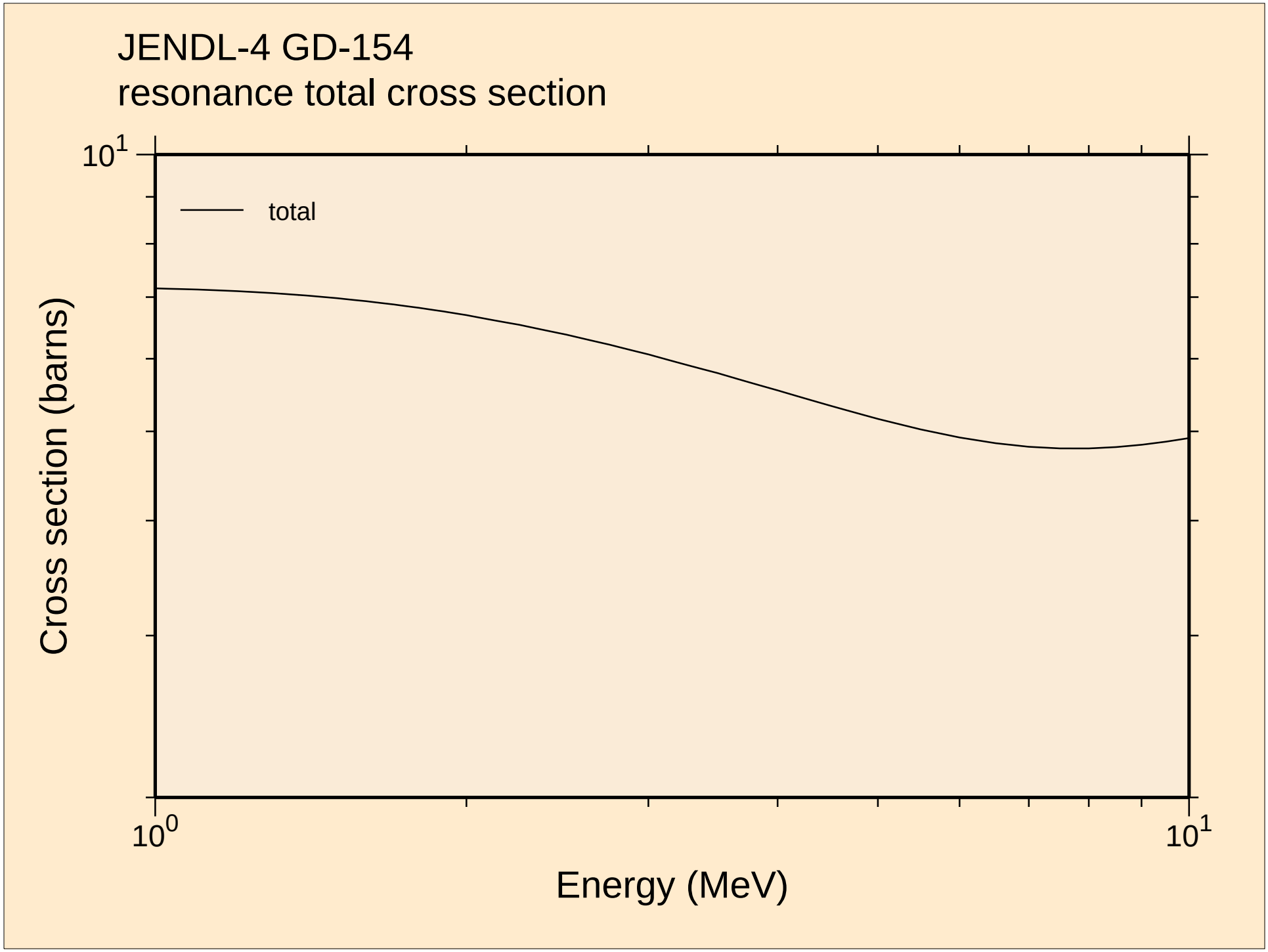
JENDL-4 GD-154
resonance total cross section
total
Cross section (barns)
Energy (MeV)
$10^1$
$10^0$
$10^1$

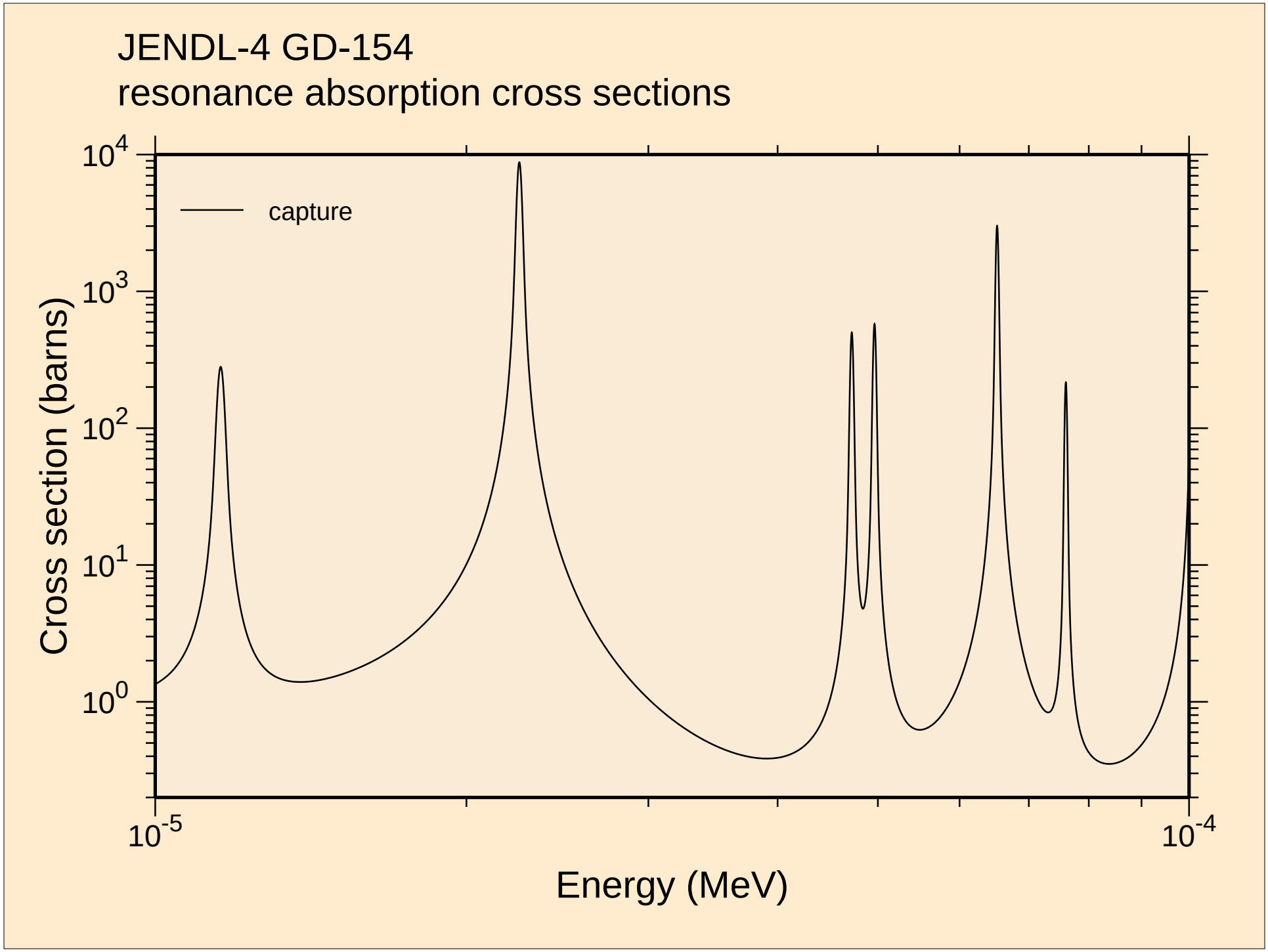
JENDL-4 GD-154
resonance absorption cross sections
capture
Cross section (barns)
$10^4$
$10^3$
$10^2$
$10^1$
$10^0$
$10^{-5}$
$10^{-4}$
Energy (MeV)

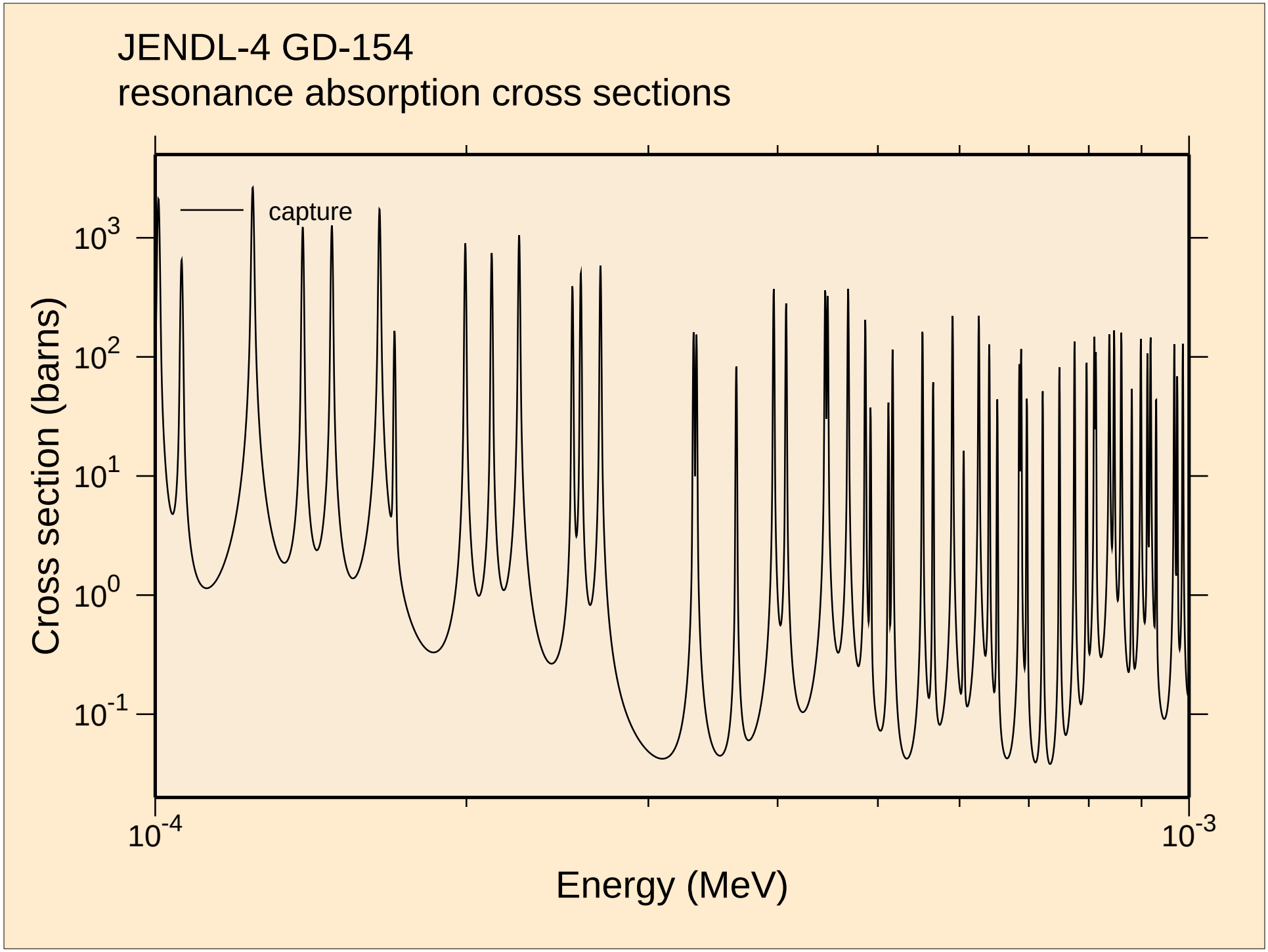
JENDL-4 GD-154
resonance absorption cross sections
capture
Cross section (barns)
$10^{3}$
$10^{2}$
$10^{1}$
$10^{0}$
$10^{-1}$
$10^{-4}$
$10^{-3}$
Energy (MeV)

JENDL-4 GD-154
resonance absorption cross sections

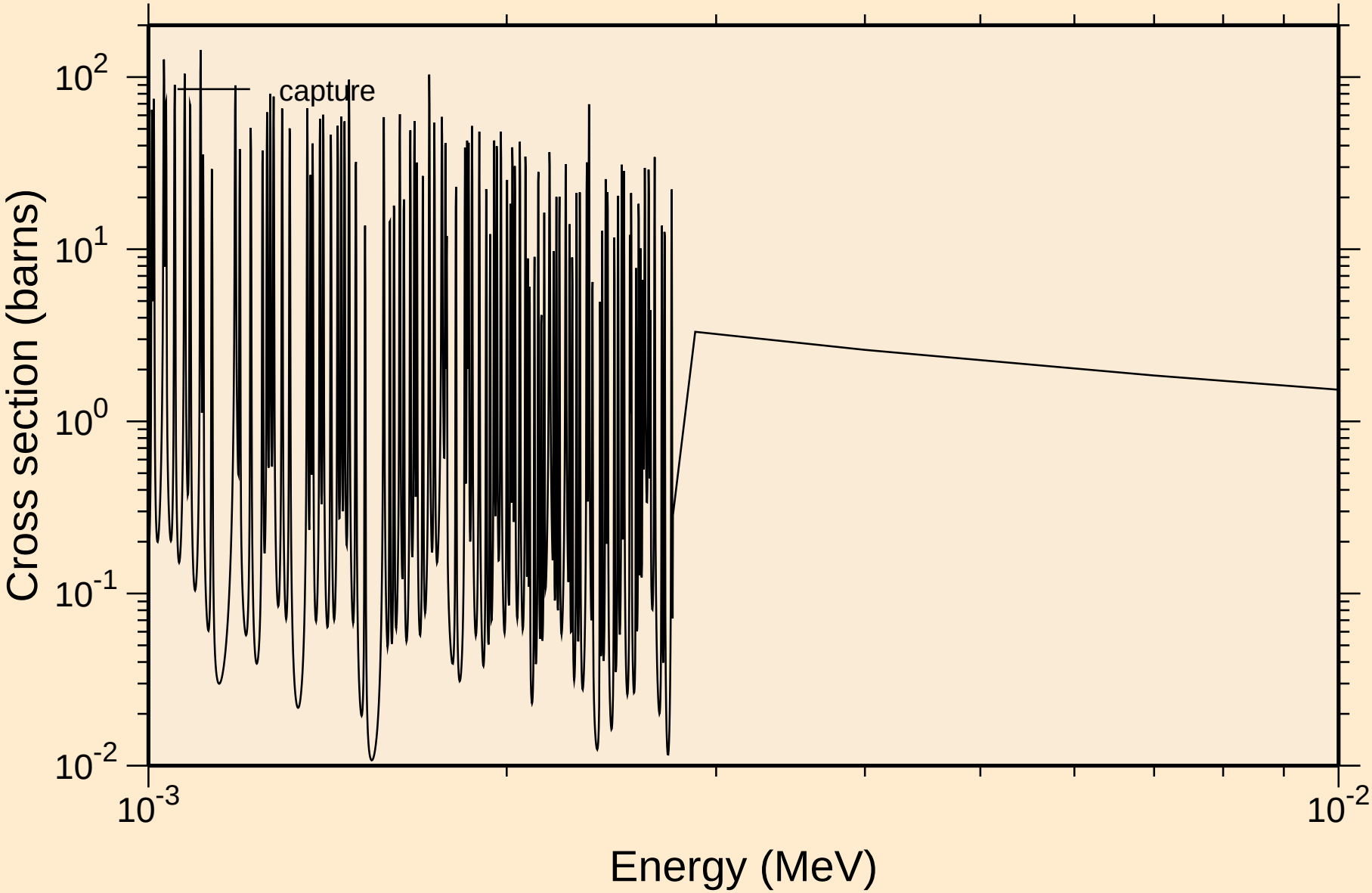

JENDL-4 GD-154
resonance absorption cross sections

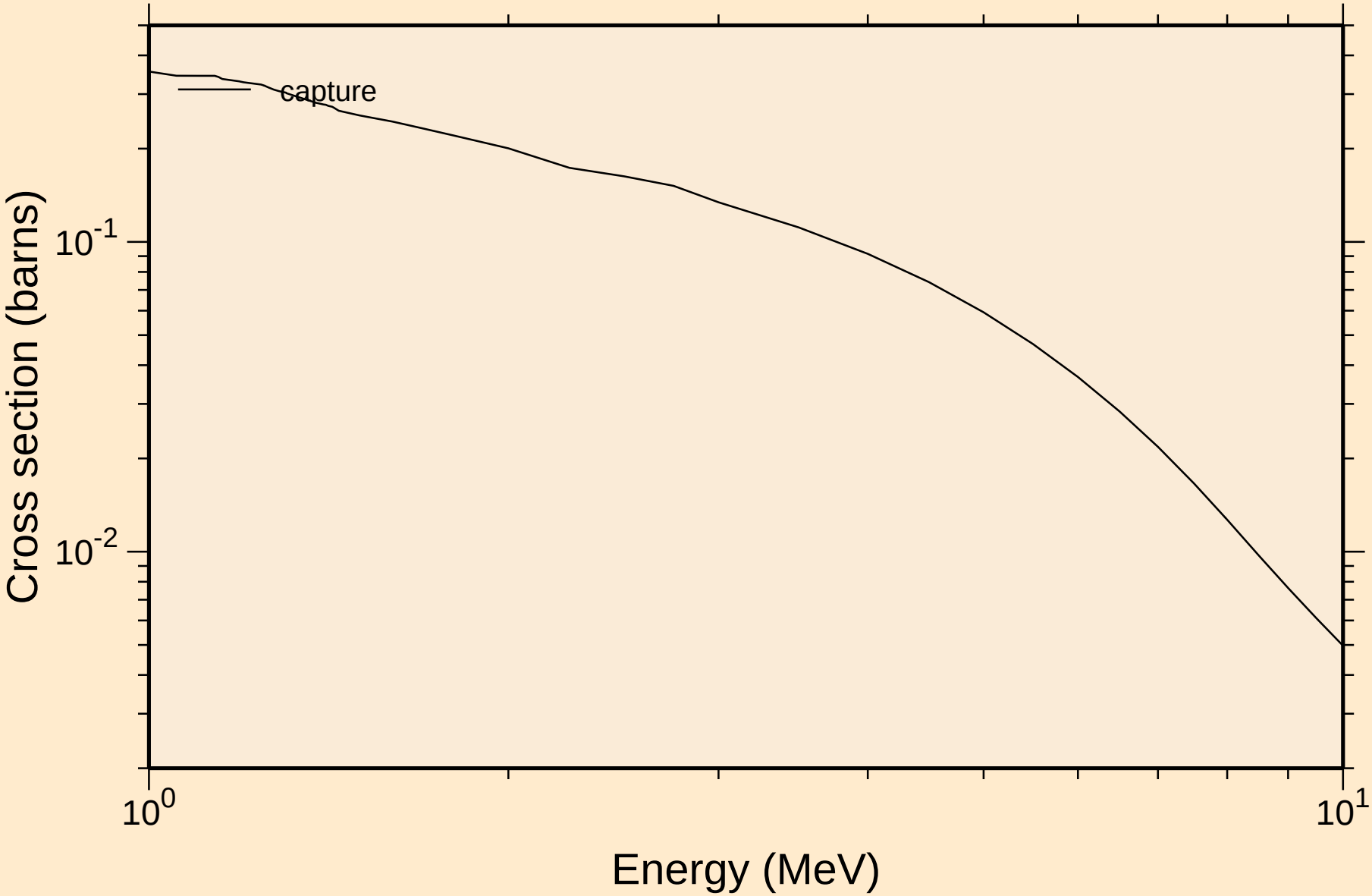

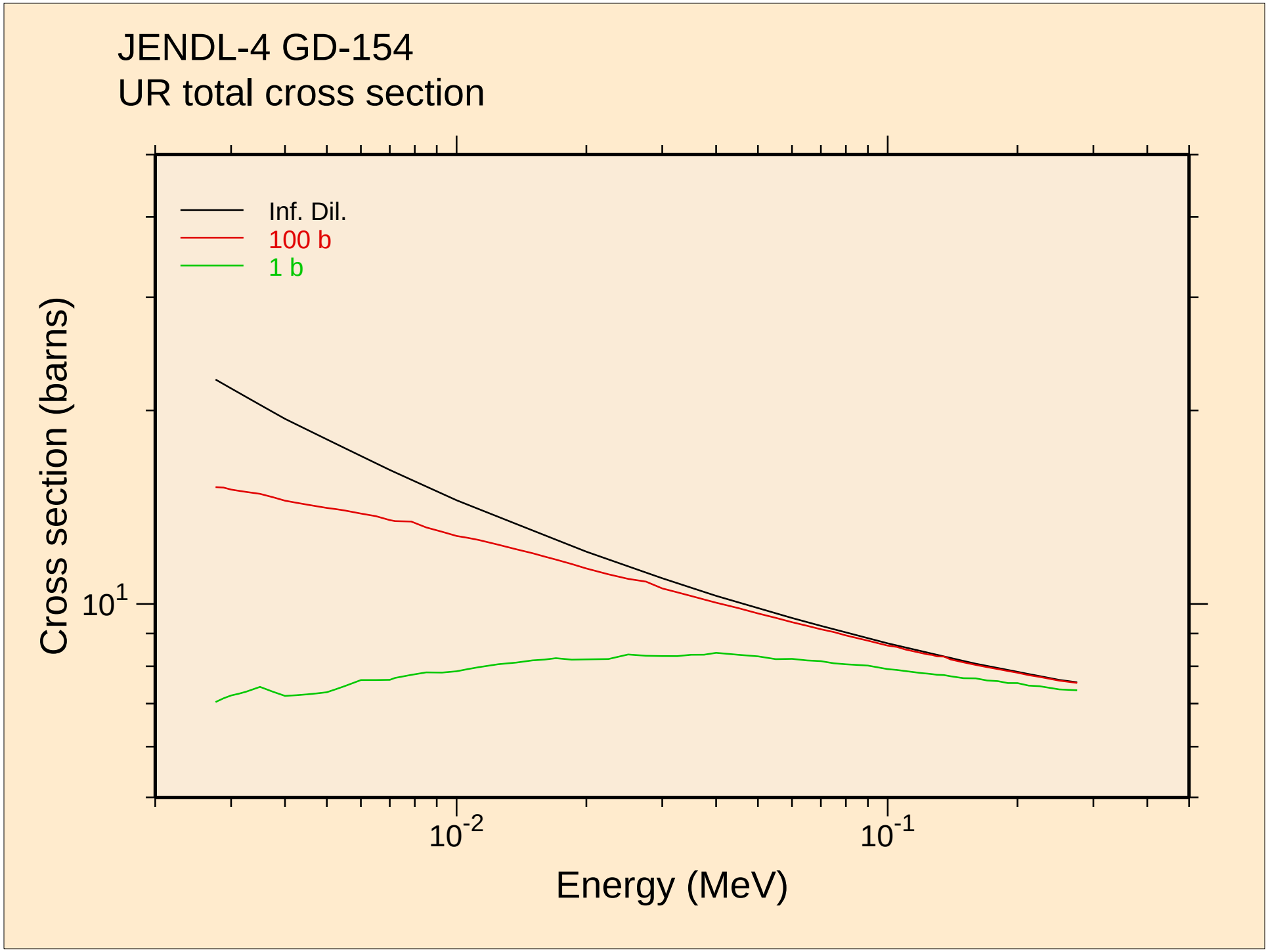
JENDL-4 GD-154
UR total cross section
Inf. Dil.
100 b
1 b
Cross section (barns)
10^1
10^-2
10^-1
Energy (MeV)

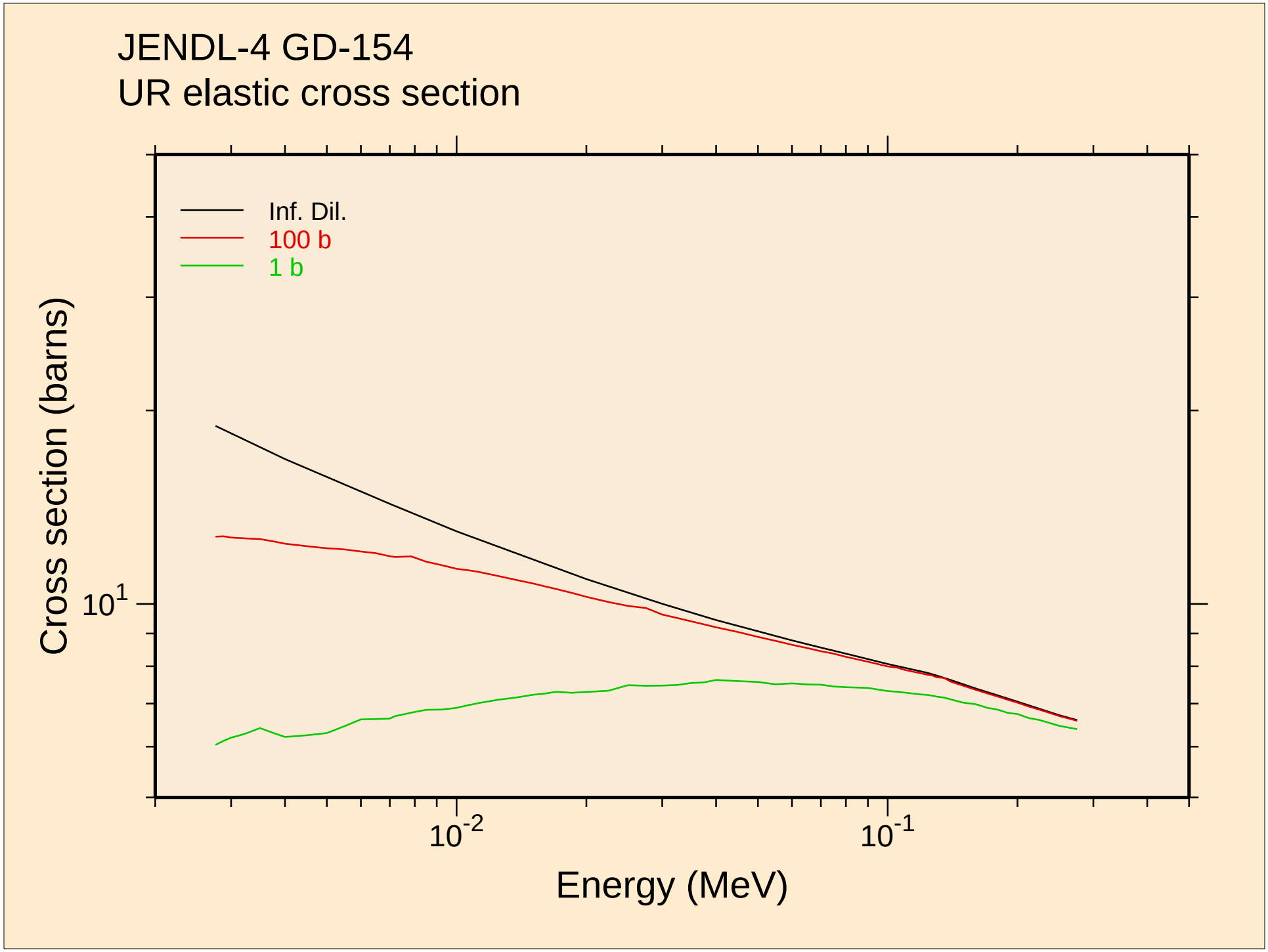
JENDL-4 GD-154
UR elastic cross section
Inf. Dil.
100 b
1 b
Cross section (barns)
10^1
10^-2
10^-1
Energy (MeV)

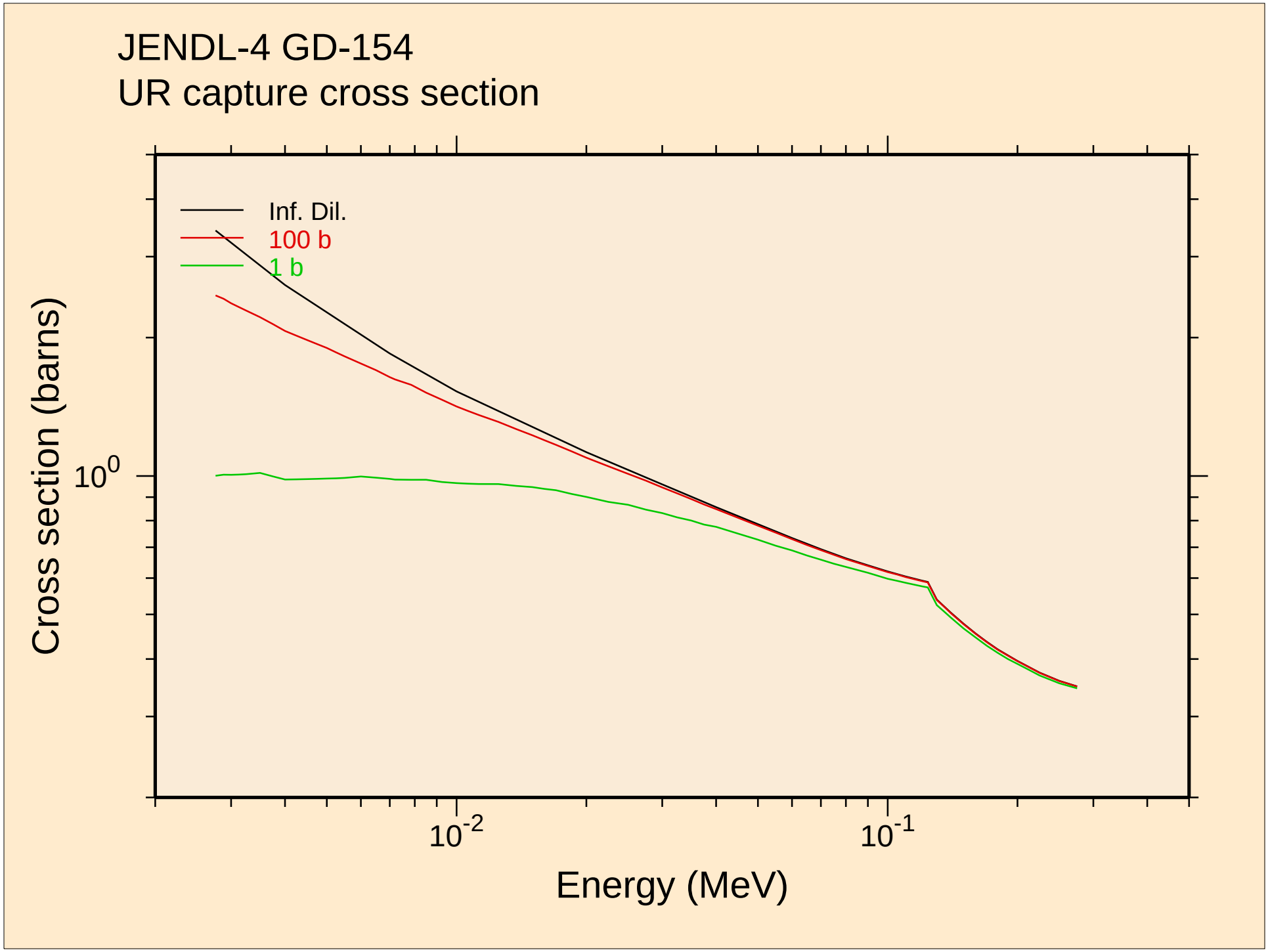
JENDL-4 GD-154
UR capture cross section
Inf. Dil.
100 b
1 b
Cross section (barns)
$10^0$
$10^{-2}$
$10^{-1}$
Energy (MeV)

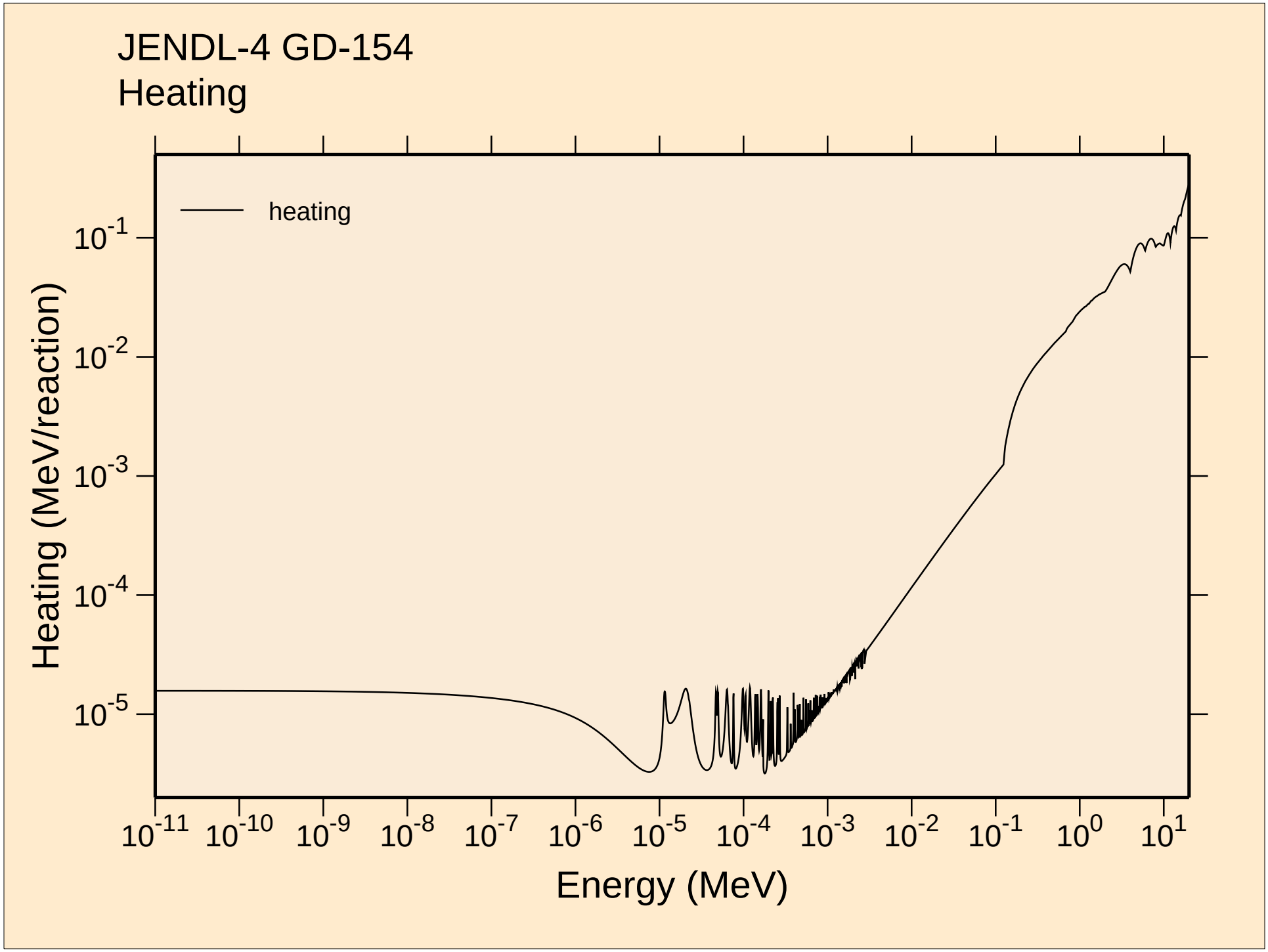
JENDL-4 GD-154
Heating
heating
Heating (MeV/reaction)
Energy (MeV)
10-1
10-2
10-3
10-4
10-5
10-11
10-10
10-9
10-8
10-7
10-6
10-5
10-4
10-3
10-2
10-1
100
101

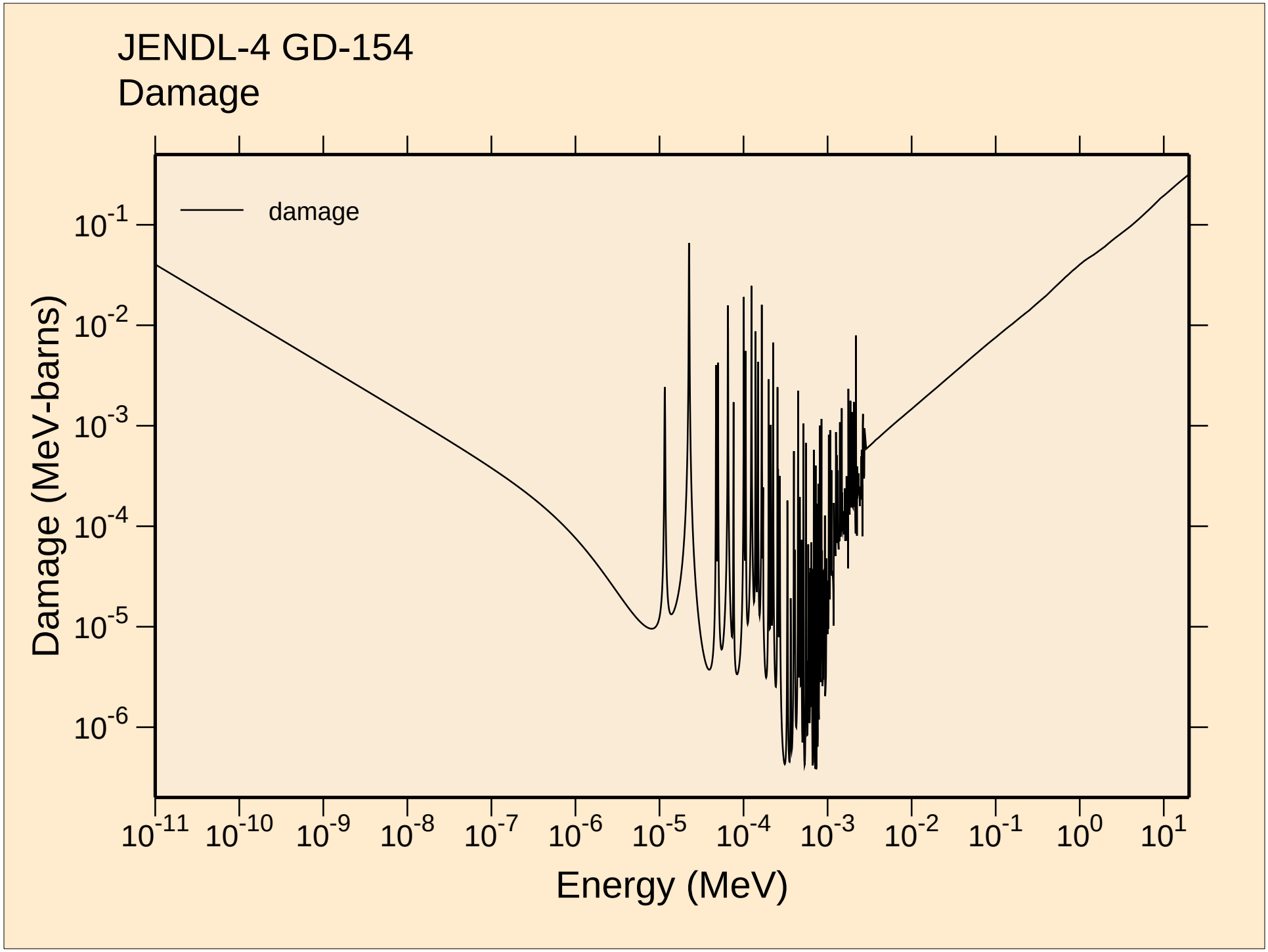
JENDL-4 GD-154
Damage
damage
Damage (MeV-barns)
Energy (MeV)
10^-1
10^-2
10^-3
10^-4
10^-5
10^-6
10^-11
10^-10
10^-9
10^-8
10^-7
10^-6
10^-5
10^-4
10^-3
10^-2
10^-1
10^0
10^1

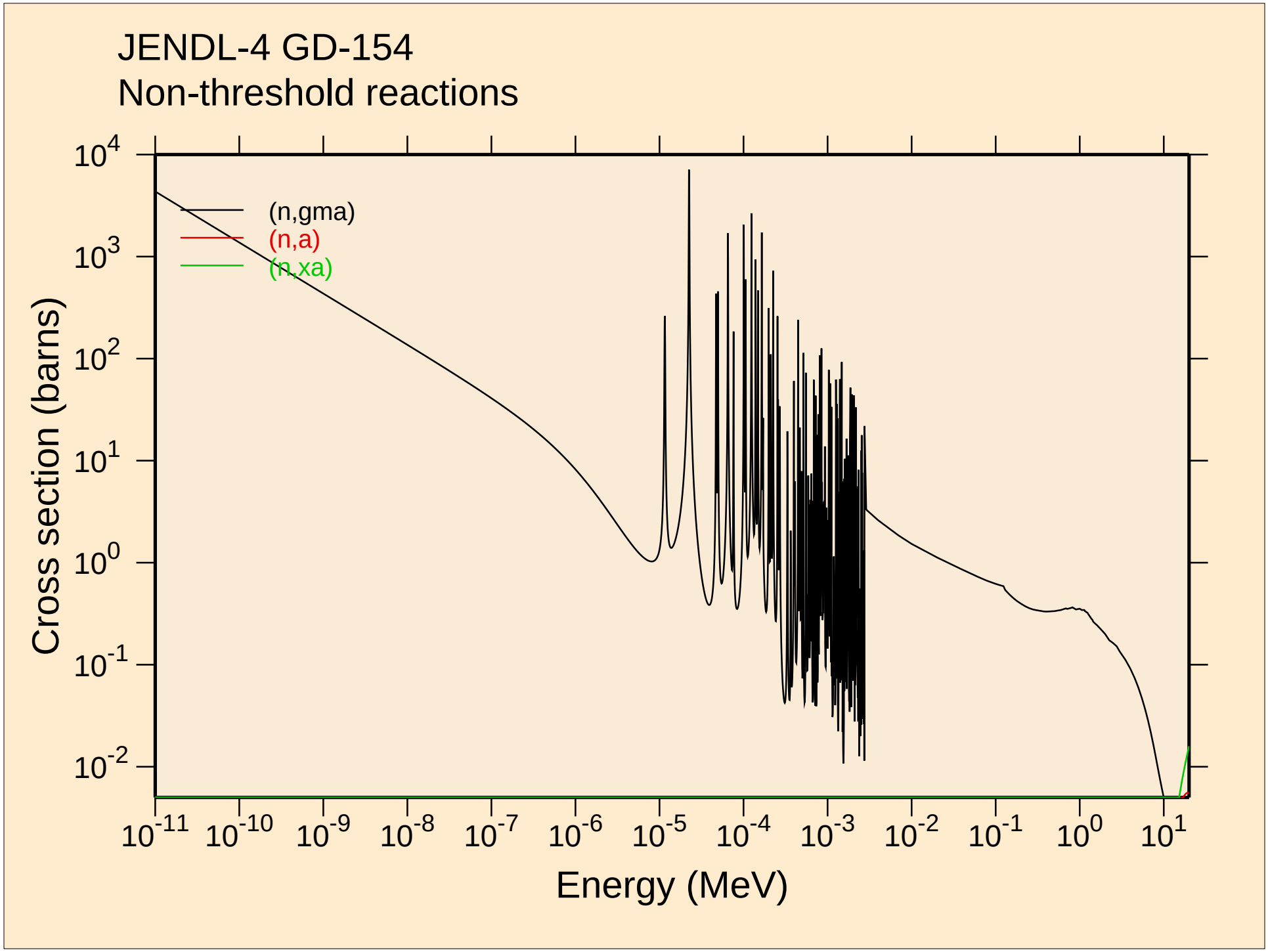
JENDL-4 GD-154
Non-threshold reactions
(n,gma)
(n,a)
(n,xa)
Cross section (barns)
Energy (MeV)
10^4
10^3
10^2
10^1
10^0
10^-1
10^-2
10^-11
10^-10
10^-9
10^-8
10^-7
10^-6
10^-5
10^-4
10^-3
10^-2
10^-1
10^0
10^1

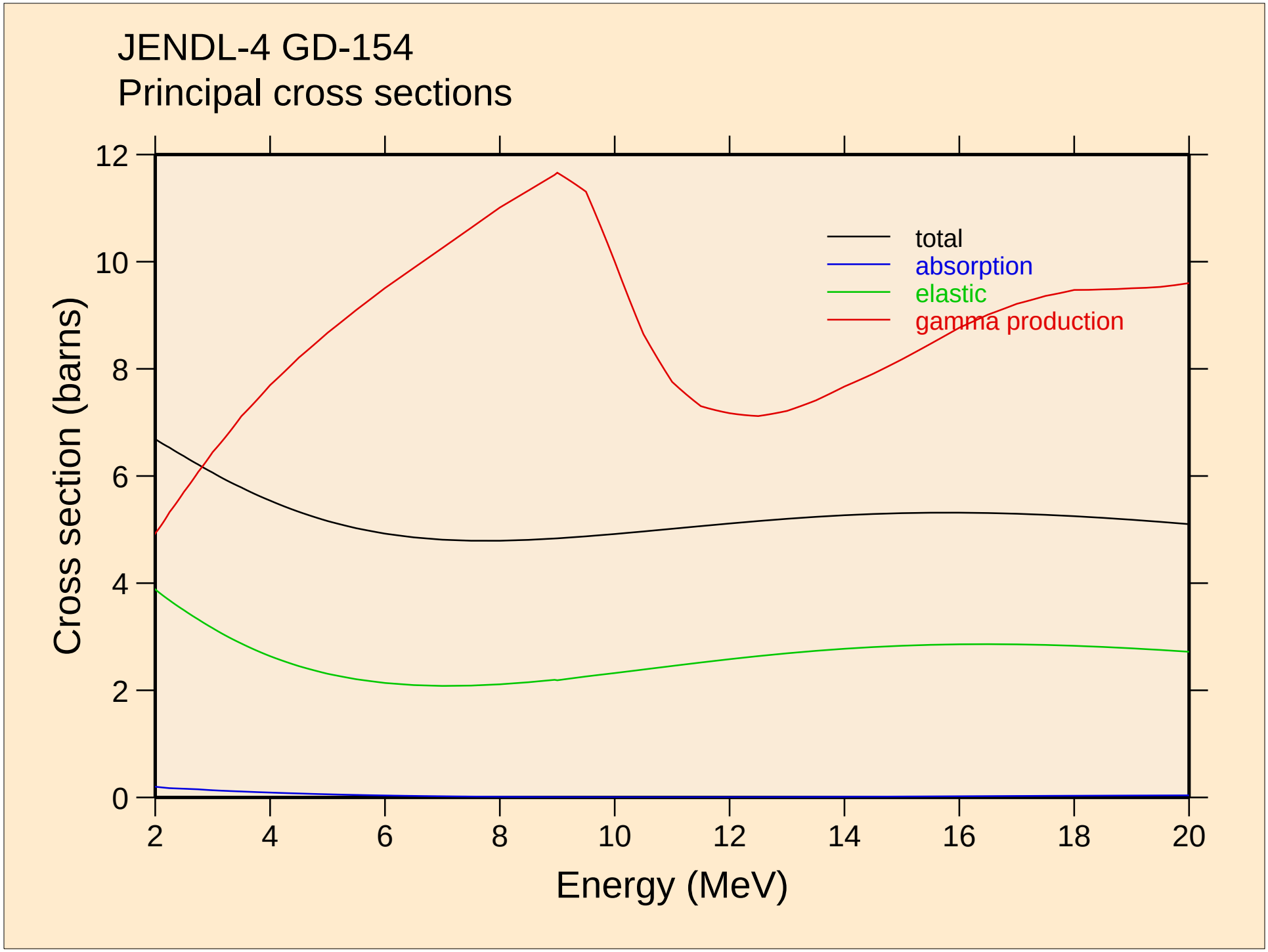
JENDL-4 GD-154
Principal cross sections
Cross section (barns)
Energy (MeV)
total
absorption
elastic
gamma production
0
2
4
6
8
10
12
2
4
6
8
10
12
14
16
18
20

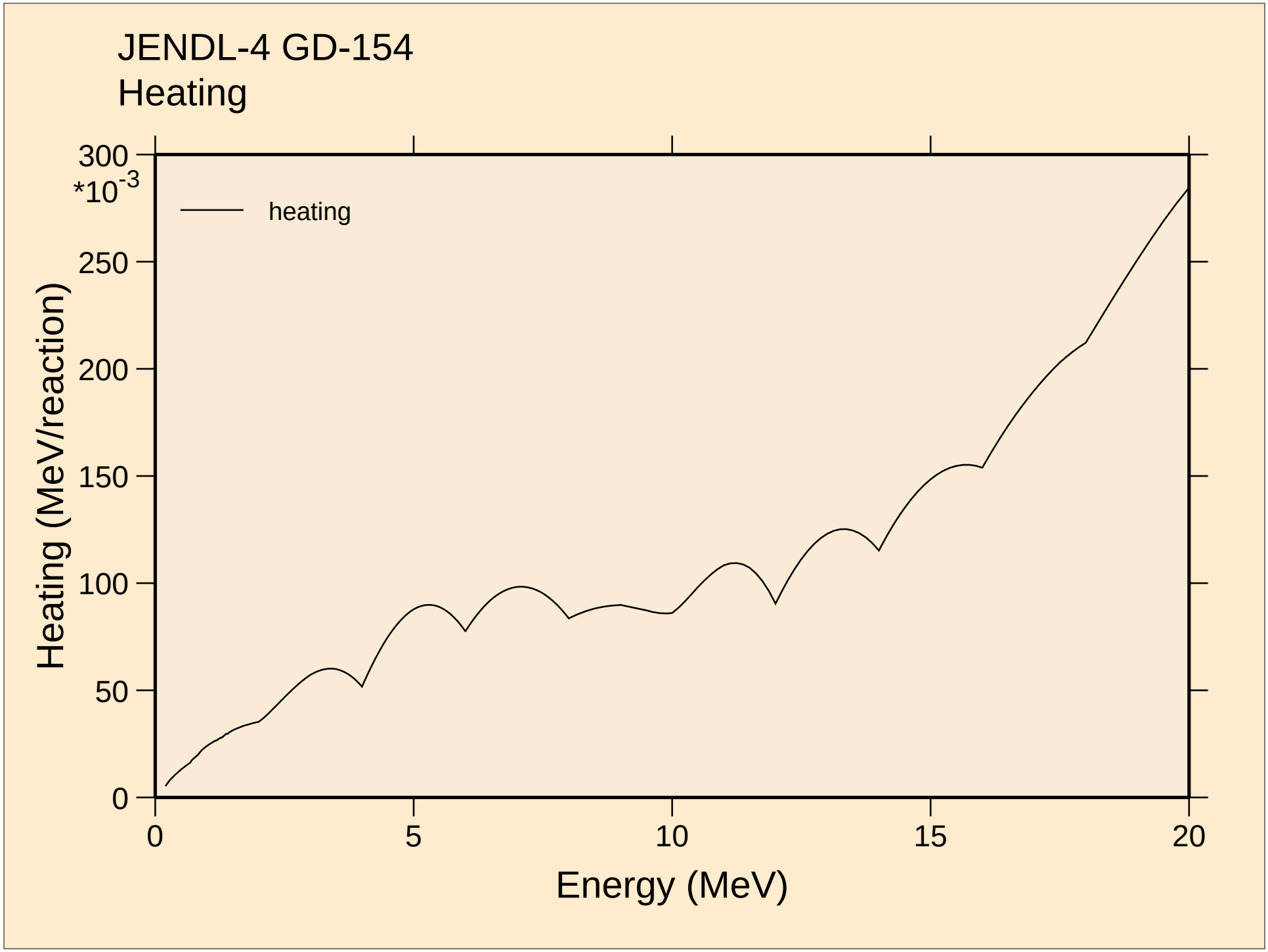
JENDL-4 GD-154
Heating
heating
Heating (MeV/reaction)
*10-3
300
250
200
150
100
50
0
0
5
10
15
20
Energy (MeV)

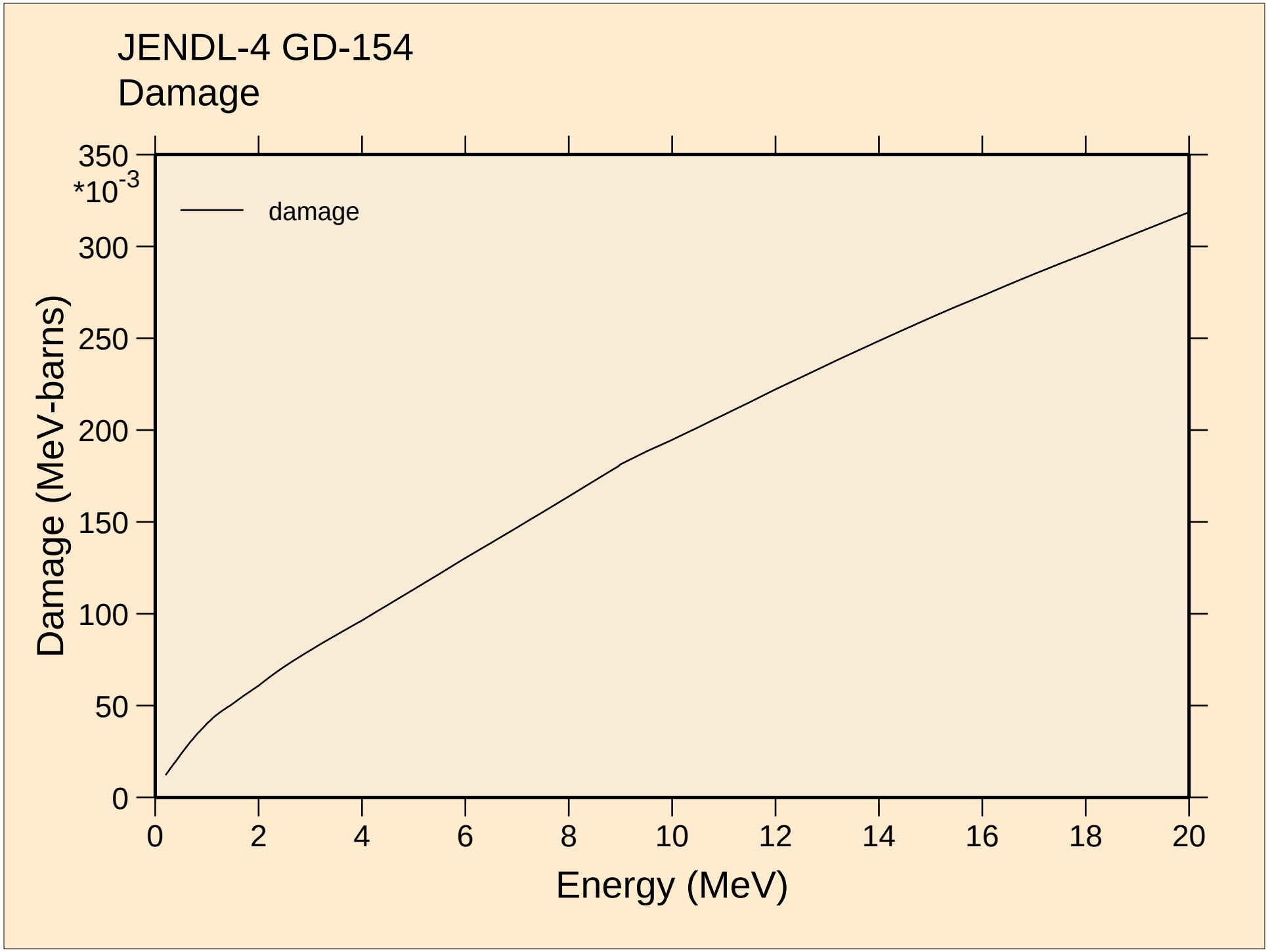
JENDL-4 GD-154
Damage
damage
*10-3
350
300
250
200
150
100
50
0
Damage (MeV-barns)
0
2
4
6
8
10
12
14
16
18
20
Energy (MeV)

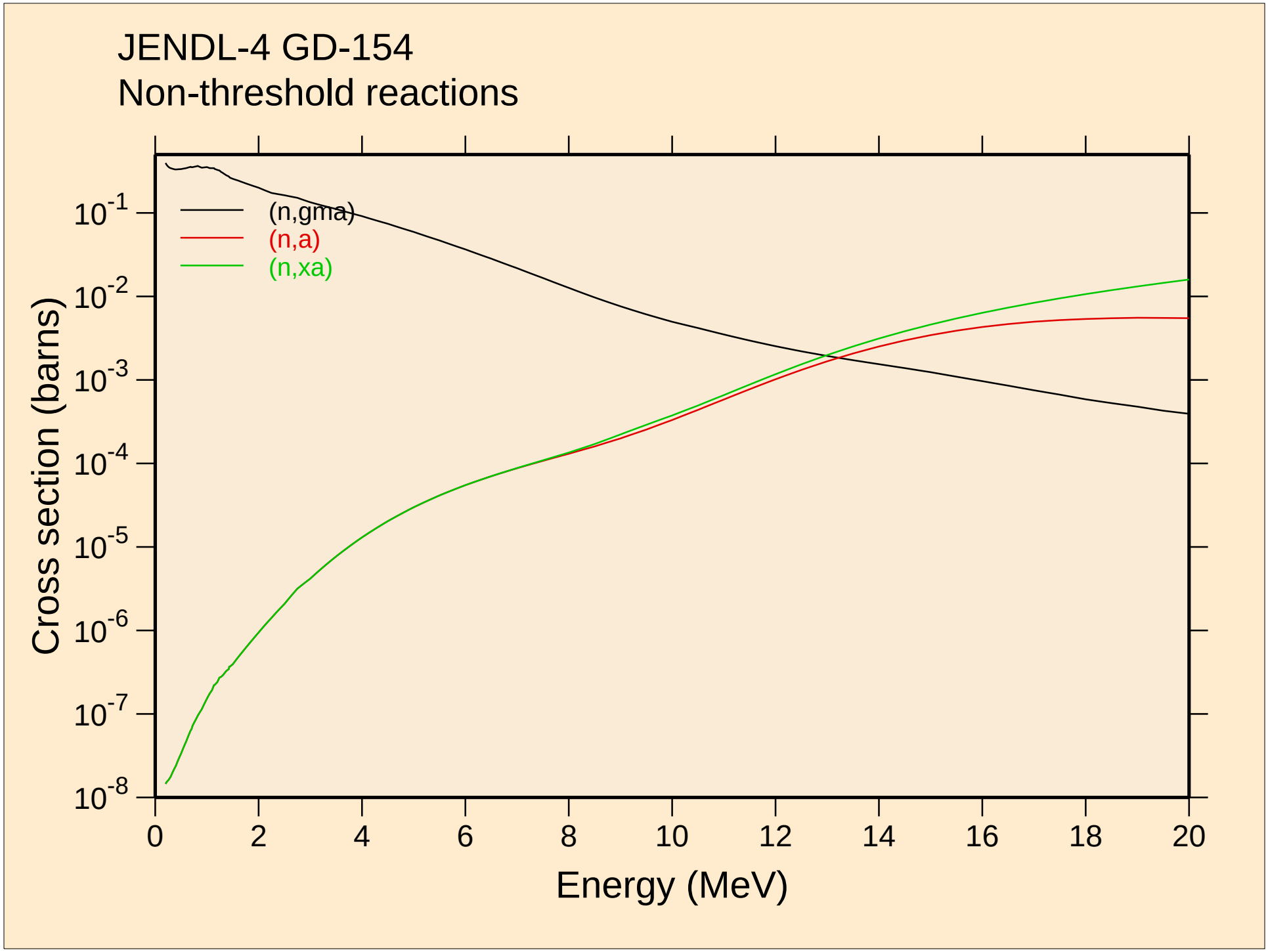
JENDL-4 GD-154
Non-threshold reactions
(n,gma)
(n,a)
(n,xa)
Cross section (barns)
Energy (MeV)
10-1
10-2
10-3
10-4
10-5
10-6
10-7
10-8
0
2
4
6
8
10
12
14
16
18
20

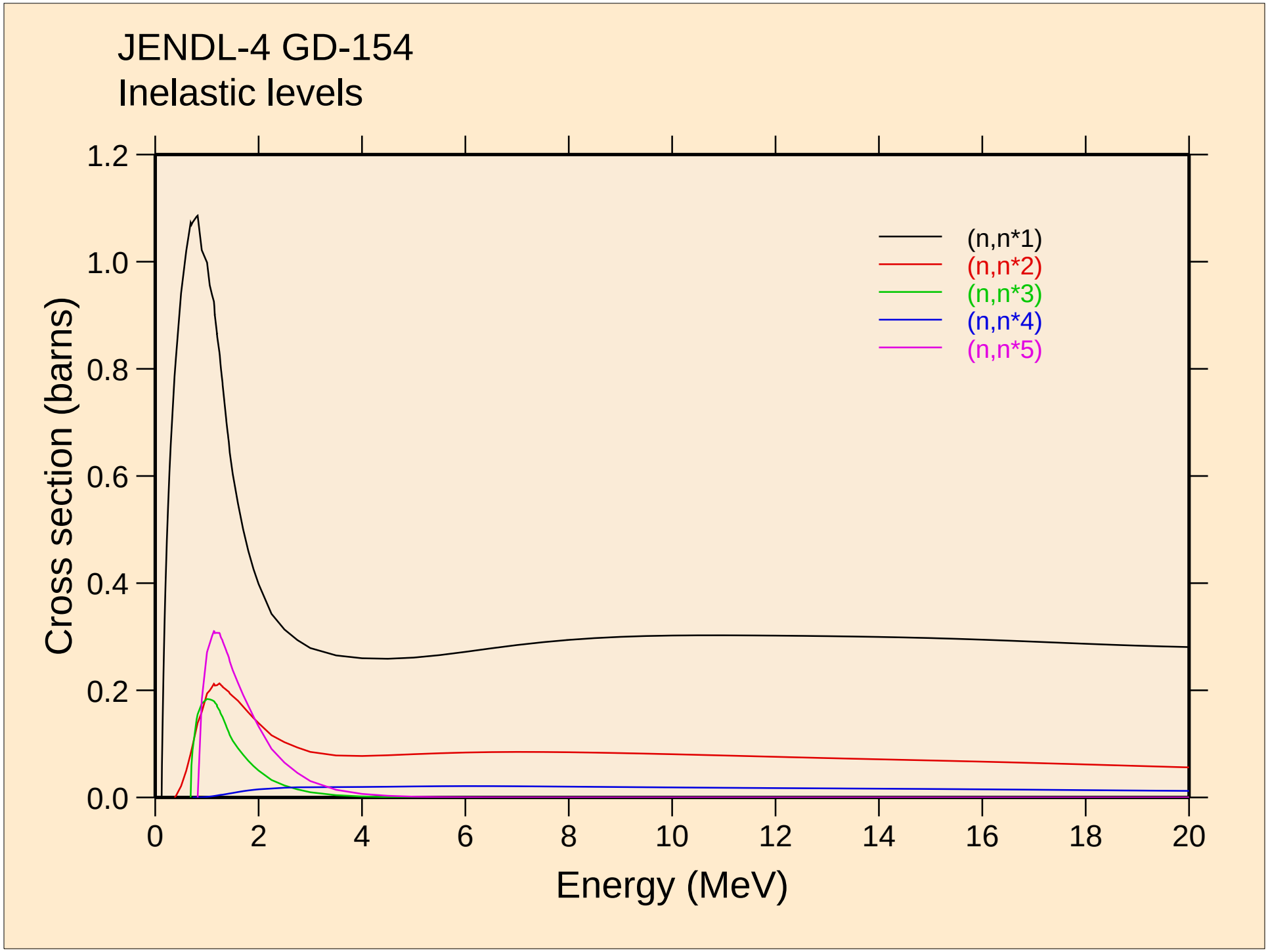
JENDL-4 GD-154
Inelastic levels
Cross section (barns)
Energy (MeV)
(n,n*1)
(n,n*2)
(n,n*3)
(n,n*4)
(n,n*5)
0.0
0.2
0.4
0.6
0.8
1.0
1.2
0
2
4
6
8
10
12
14
16
18
20

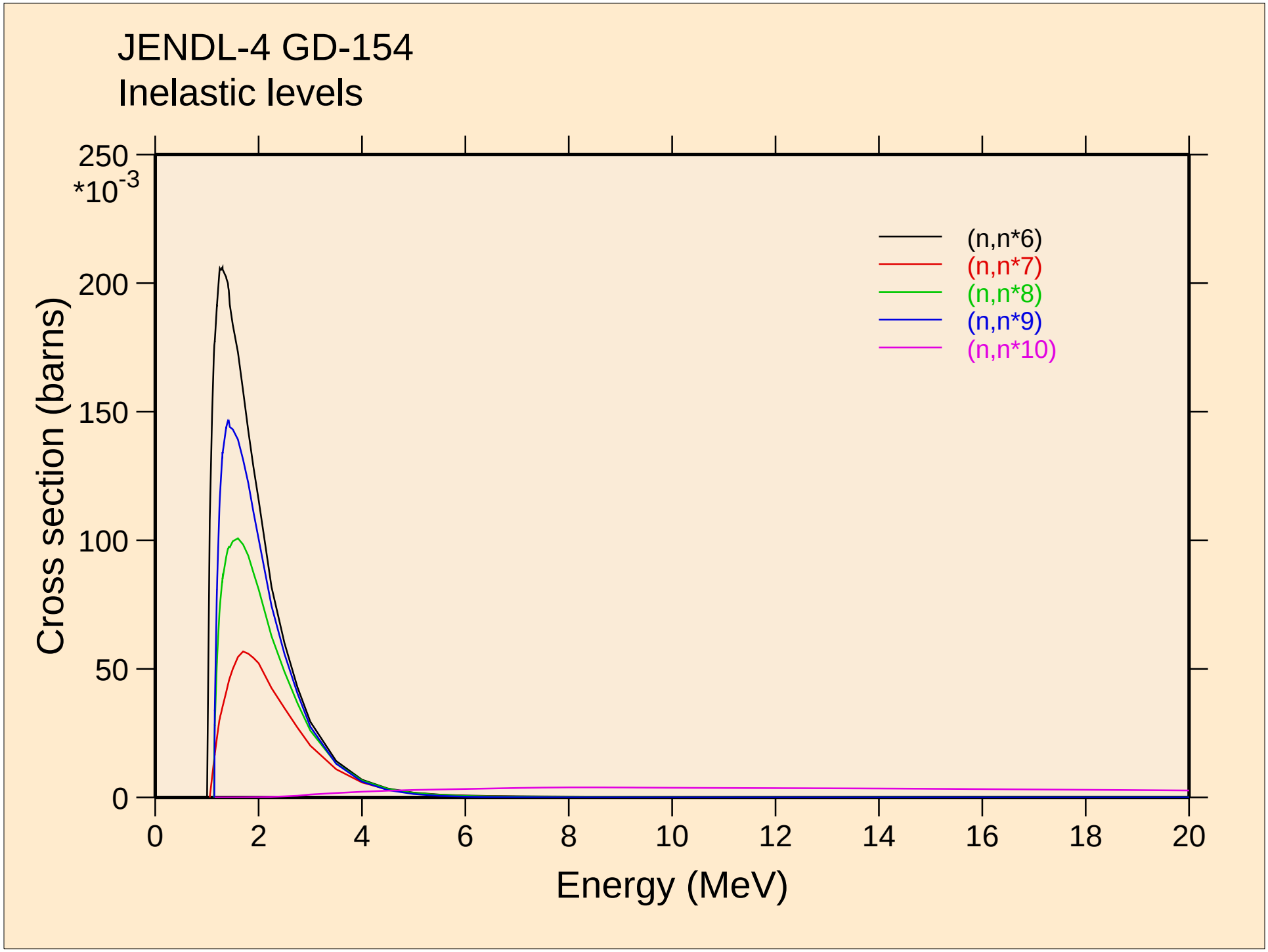
JENDL-4 GD-154
Inelastic levels
250
*10-3
200
150
100
50
0
Cross section (barns)
0
2
4
6
8
10
12
14
16
18
20
Energy (MeV)
(n,n*6)
(n,n*7)
(n,n*8)
(n,n*9)
(n,n*10)

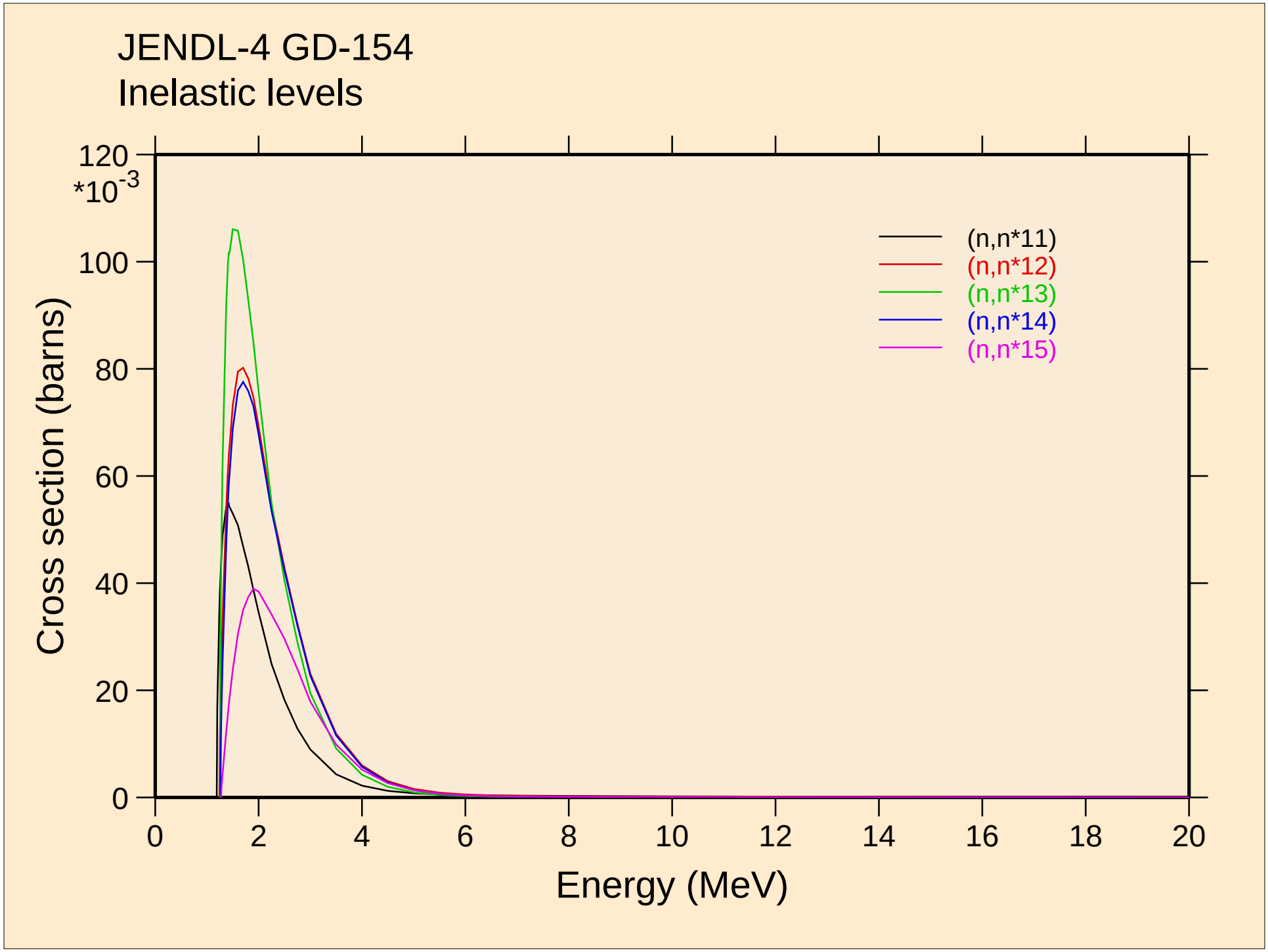
JENDL-4 GD-154
Inelastic levels
120
*10-3
100
80
60
40
20
0
Cross section (barns)
0
2
4
6
8
10
12
14
16
18
20
Energy (MeV)
(n,n*11)
(n,n*12)
(n,n*13)
(n,n*14)
(n,n*15)

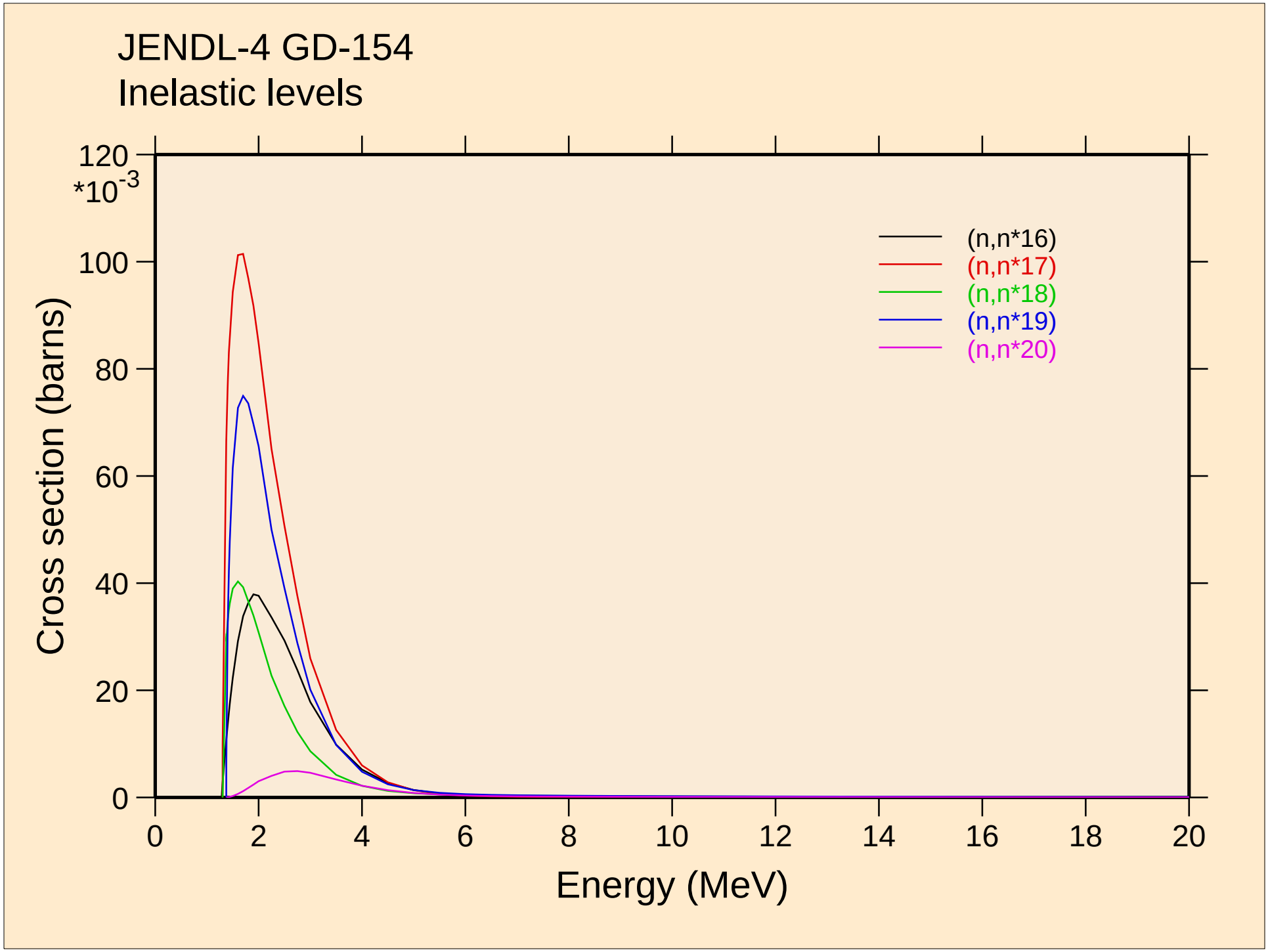
JENDL-4 GD-154
Inelastic levels
120
*10-3
100
80
60
40
20
0
Cross section (barns)
0
2
4
6
8
10
12
14
16
18
20
Energy (MeV)
(n,n*16)
(n,n*17)
(n,n*18)
(n,n*19)
(n,n*20)

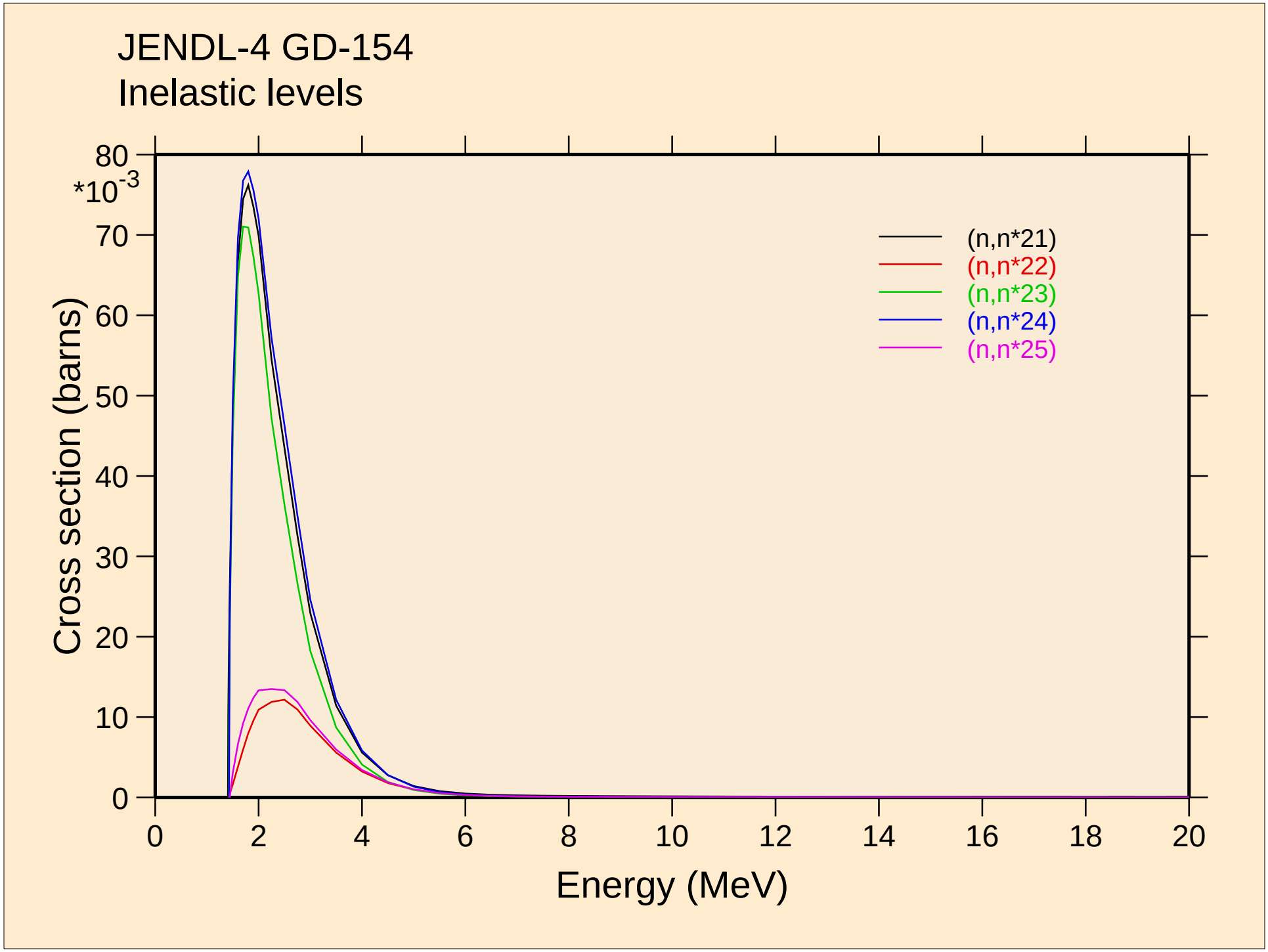
JENDL-4 GD-154
Inelastic levels
Cross section (barns)
*10-3
80
70
60
50
40
30
20
10
0
0
2
4
6
8
10
12
14
16
18
20
Energy (MeV)
(n,n*21)
(n,n*22)
(n,n*23)
(n,n*24)
(n,n*25)

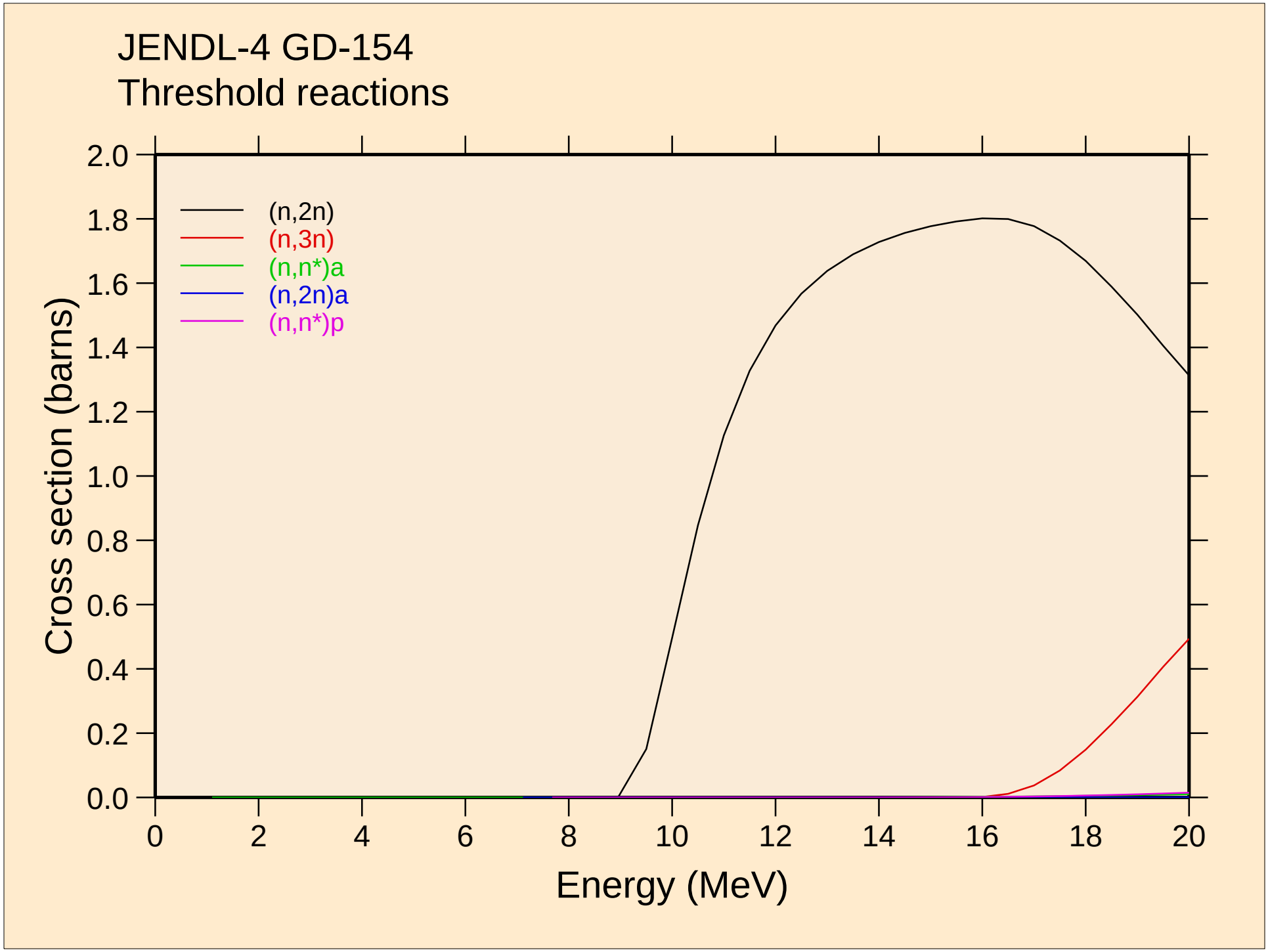
JENDL-4 GD-154
Threshold reactions
(n,2n)
(n,3n)
(n,n*)a
(n,2n)a
(n,n*)p
Cross section (barns)
Energy (MeV)
0.0
0.2
0.4
0.6
0.8
1.0
1.2
1.4
1.6
1.8
2.0
0
2
4
6
8
10
12
14
16
18
20

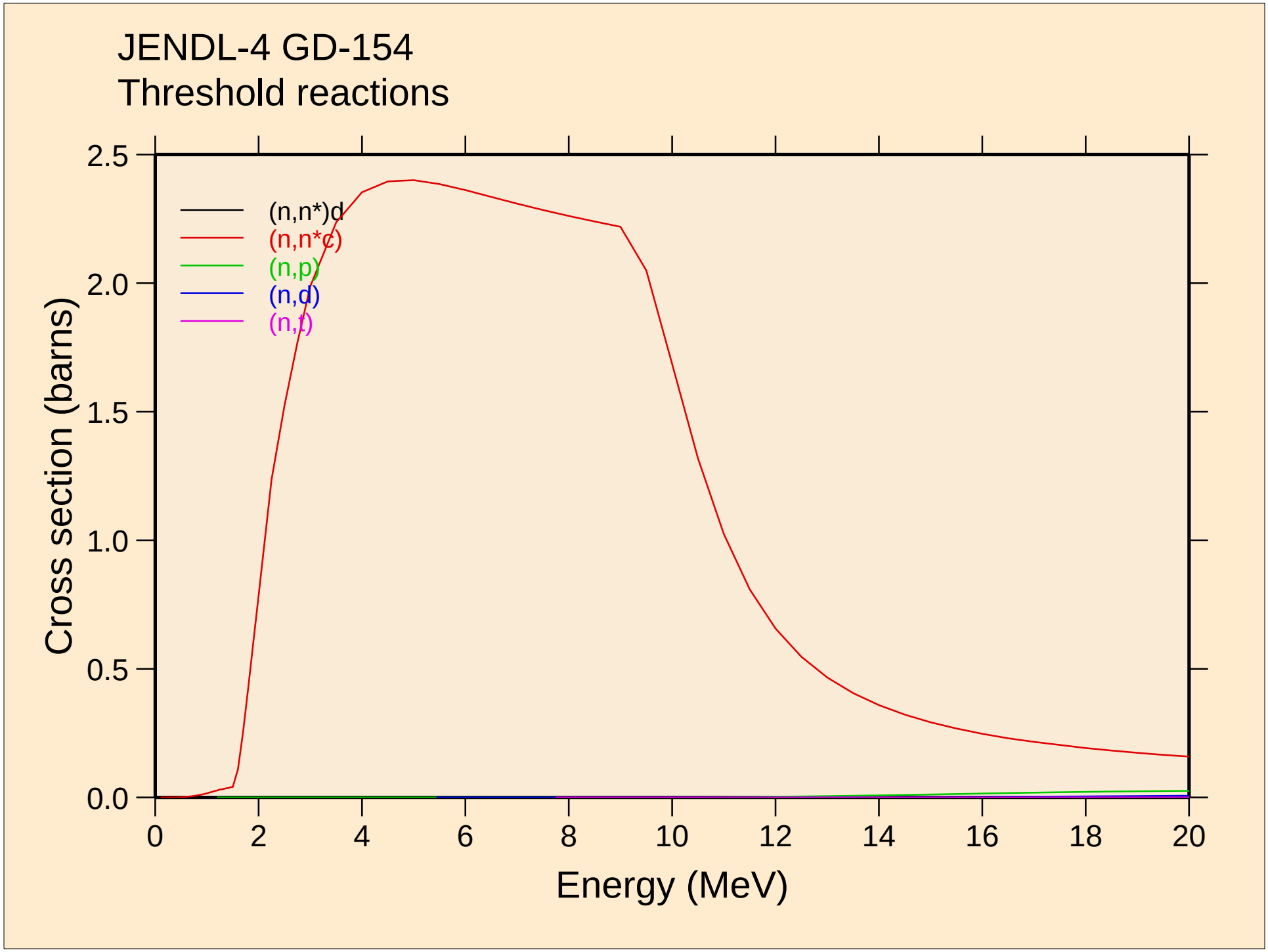
JENDL-4 GD-154
Threshold reactions
(n,n*)d
(n,n*c)
(n,p)
(n,d)
(n,t)
Cross section (barns)
Energy (MeV)
0.0
0.5
1.0
1.5
2.0
2.5
0
2
4
6
8
10
12
14
16
18
20

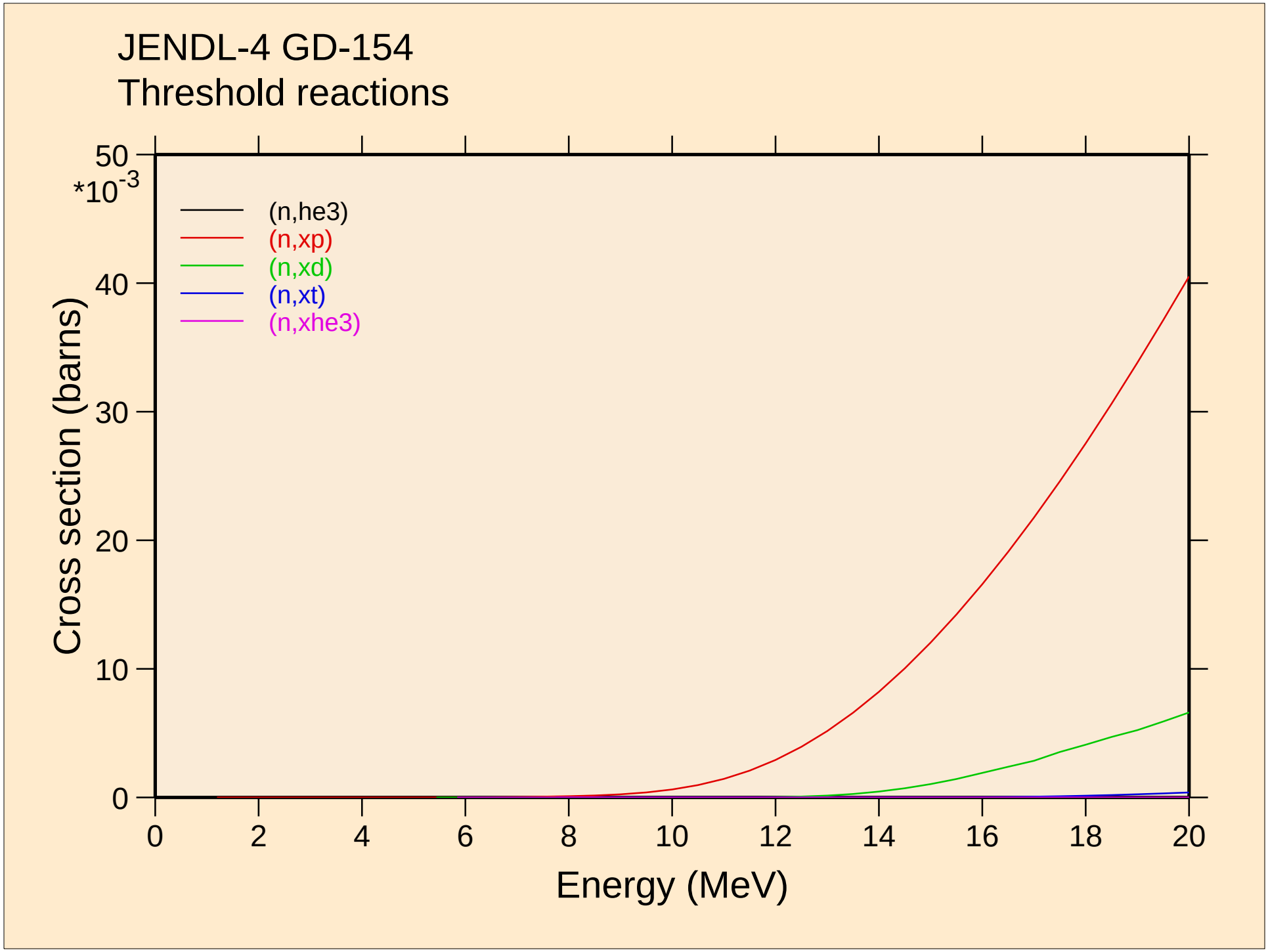
JENDL-4 GD-154
Threshold reactions
*10-3
(n,he3)
(n,xp)
(n,xd)
(n,xt)
(n,xhe3)
Cross section (barns)
Energy (MeV)
0
10
20
30
40
50
0
2
4
6
8
10
12
14
16
18
20

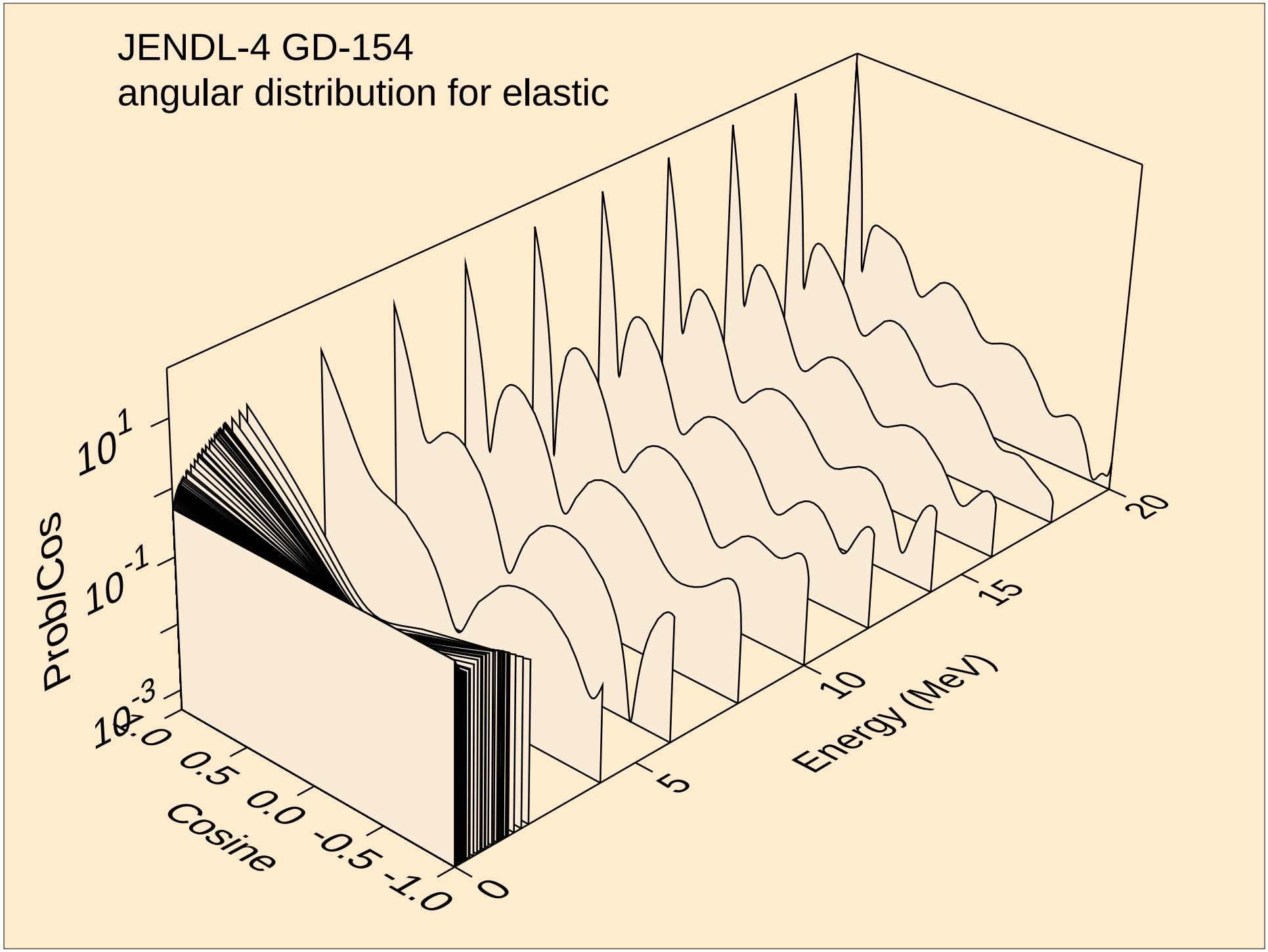
JENDL-4 GD-154
angular distribution for elastic
ProbCos
$10^{1}$
$10^{-1}$
$10^{-3}$
1.0
0.5
0.0
-0.5
-1.0
Cosine
0
5
10
15
20
Energy (MeV)

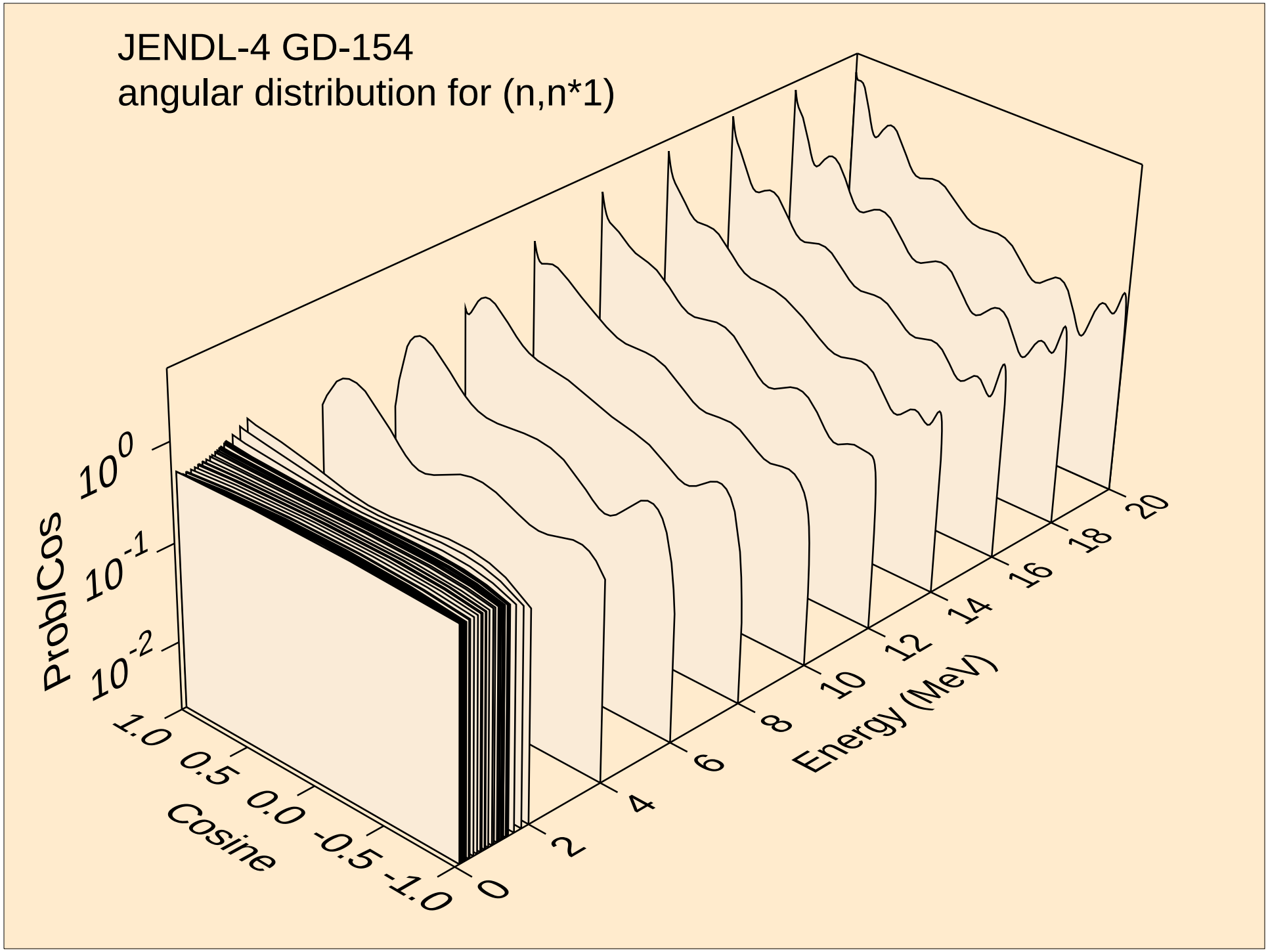
JENDL-4 GD-154
angular distribution for (n,n*1)
ProbCos
$10^{0}$
$10^{-1}$
$10^{-2}$
Cosine
1.0
0.5
0.0
-0.5
-1.0
Energy (MeV)
0
2
4
6
8
10
12
14
16
18
20

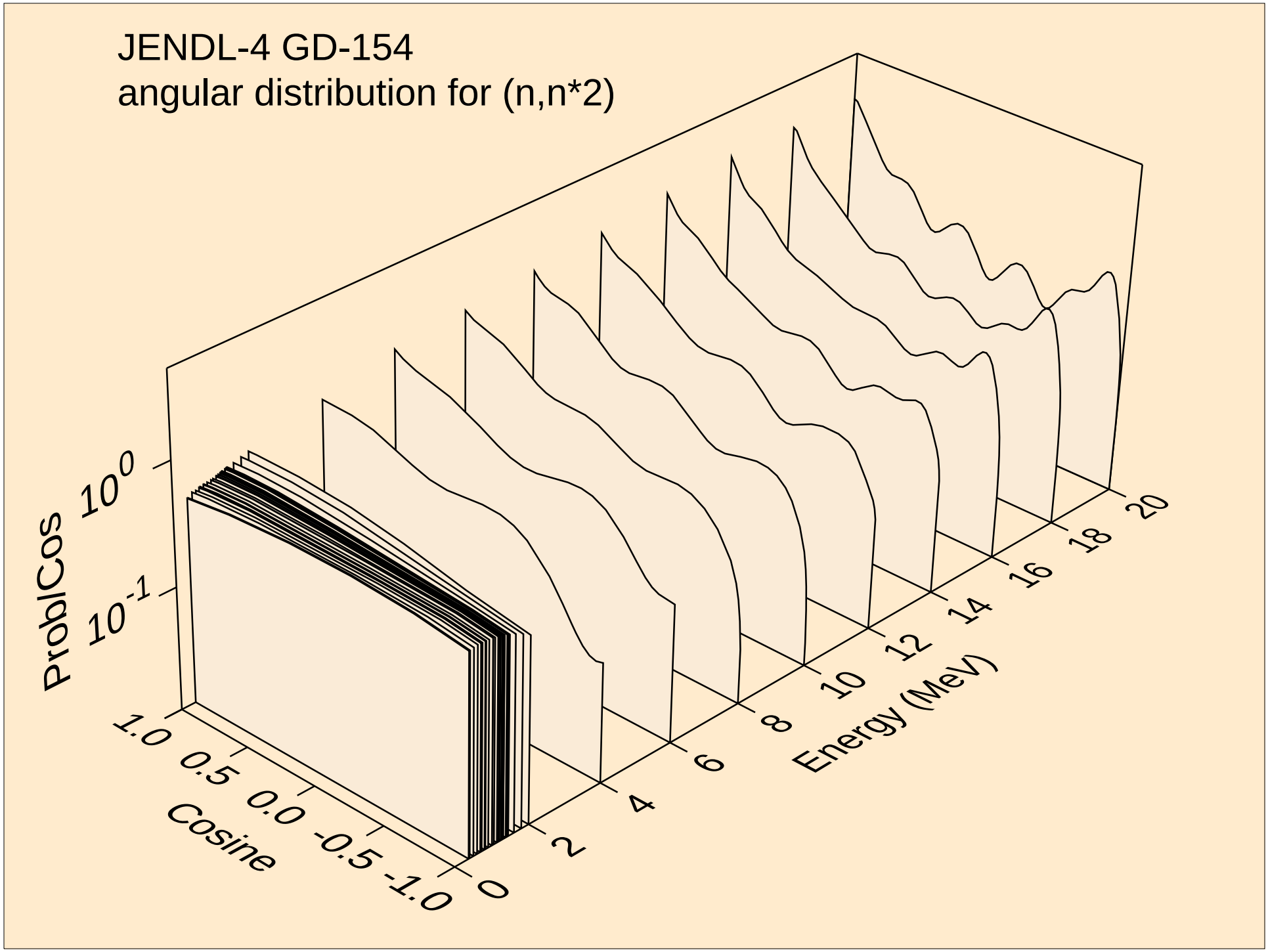
JENDL-4 GD-154
angular distribution for (n,n*2)
Prob/Cos
$10^{0}$
$10^{-1}$
1.0
0.5
0.0
-0.5
-1.0
Cosine
0
2
4
6
8
10
12
14
16
18
20
Energy (MeV)

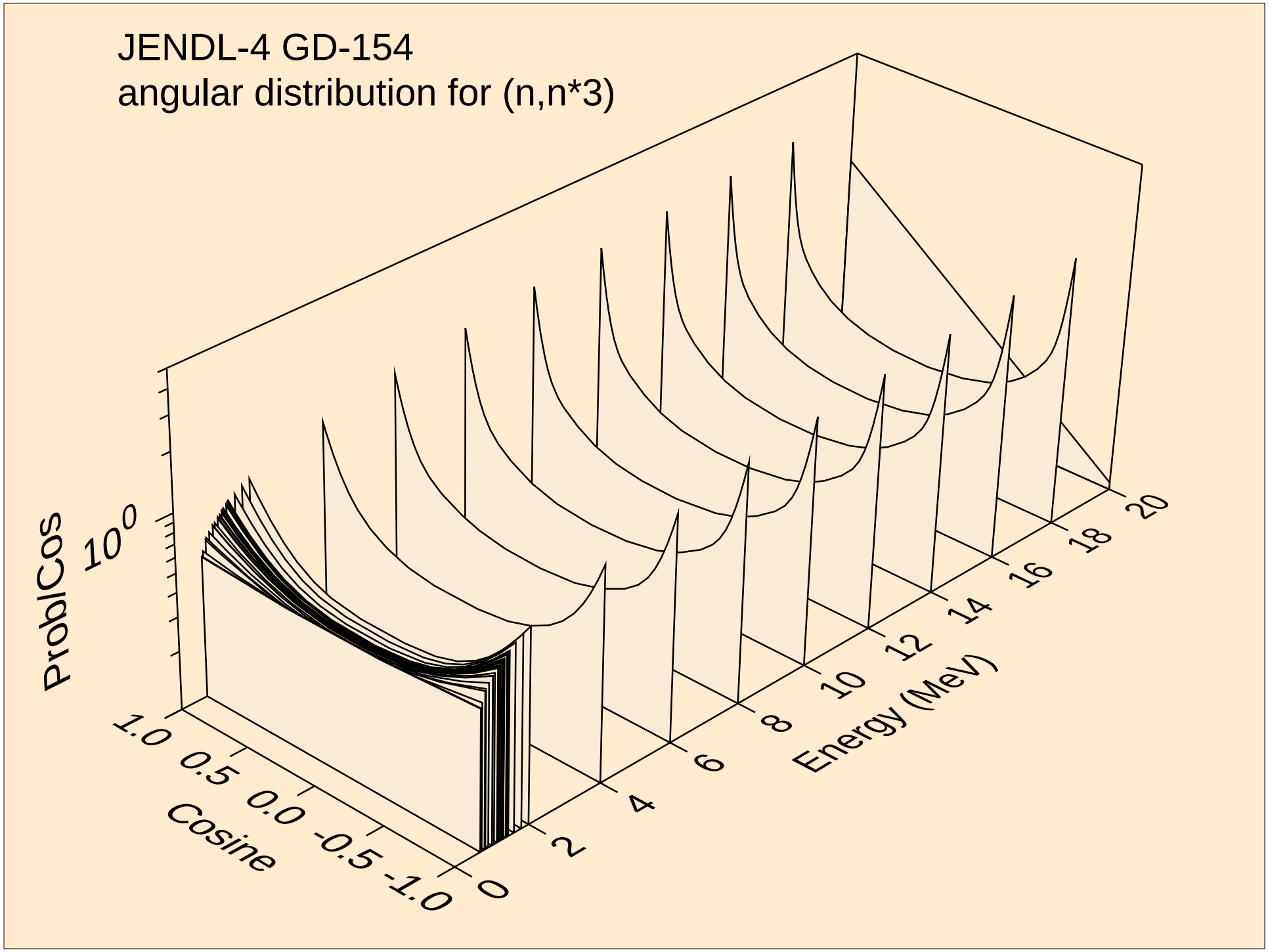
JENDL-4 GD-154
angular distribution for (n,n*3)
ProblCos
$10^0$
1.0
0.5
0.0
-0.5
-1.0
Cosine
0
2
4
6
8
10
12
14
16
18
20
Energy (MeV)

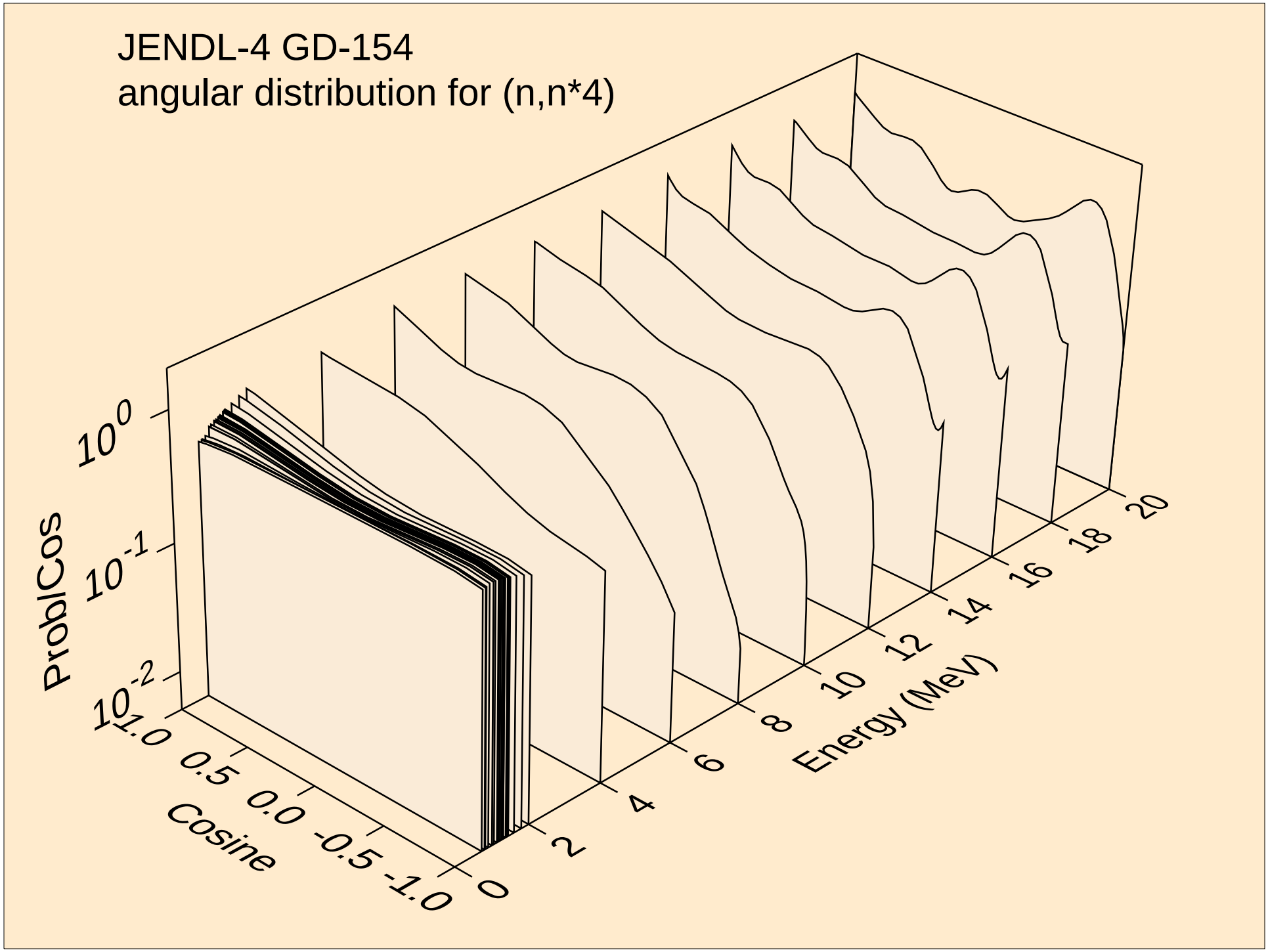
JENDL-4 GD-154
angular distribution for (n,n*4)
ProbCos
$10^{0}$
$10^{-1}$
$10^{-2}$
Cosine
1.0
0.5
0.0
-0.5
-1.0
Energy (MeV)
0
2
4
6
8
10
12
14
16
18
20

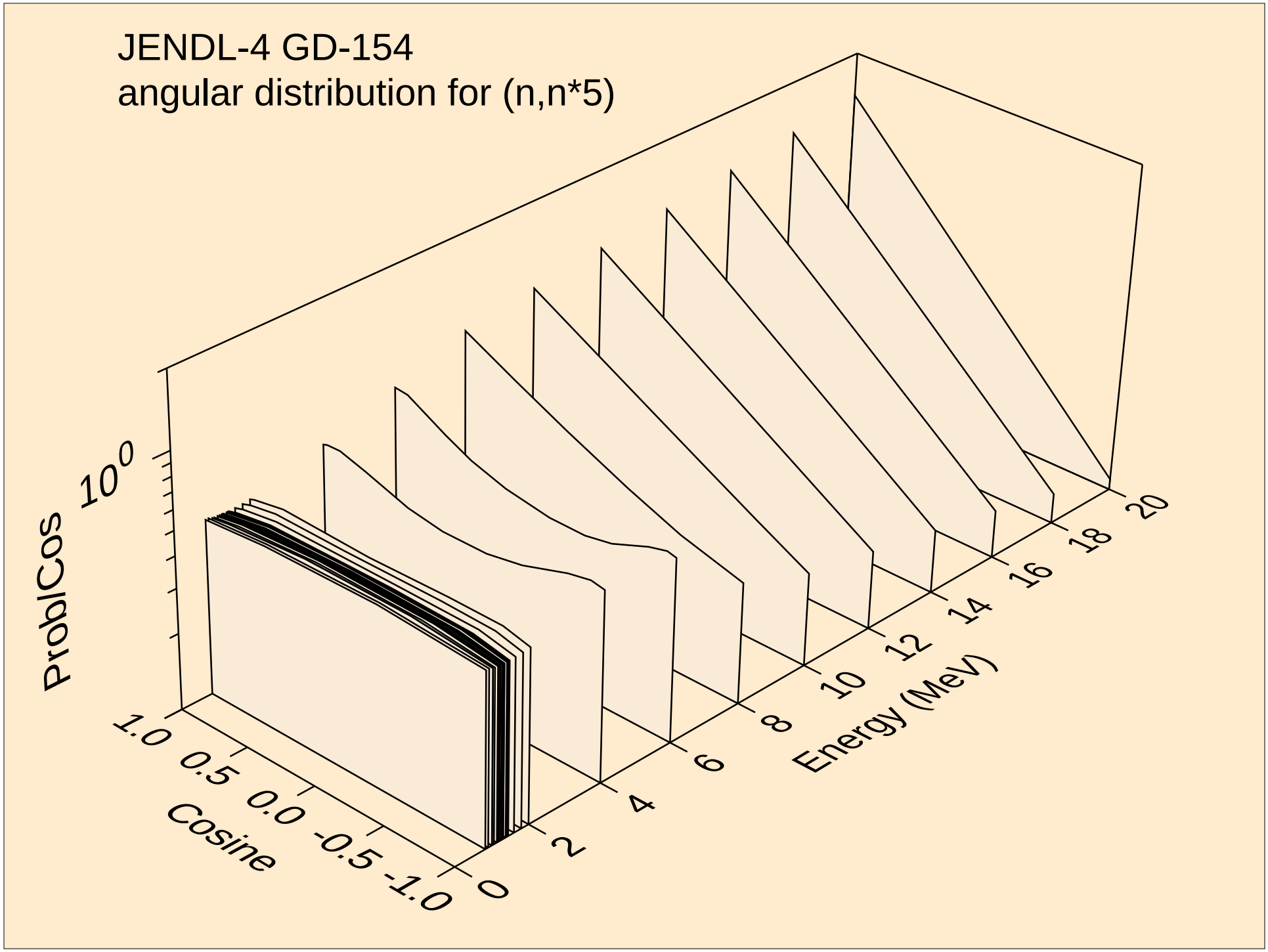
JENDL-4 GD-154
angular distribution for (n,n*5)
ProbCos
$10^0$
Cosine
1.0
0.5
0.0
-0.5
-1.0
Energy (MeV)
0
2
4
6
8
10
12
14
16
18
20

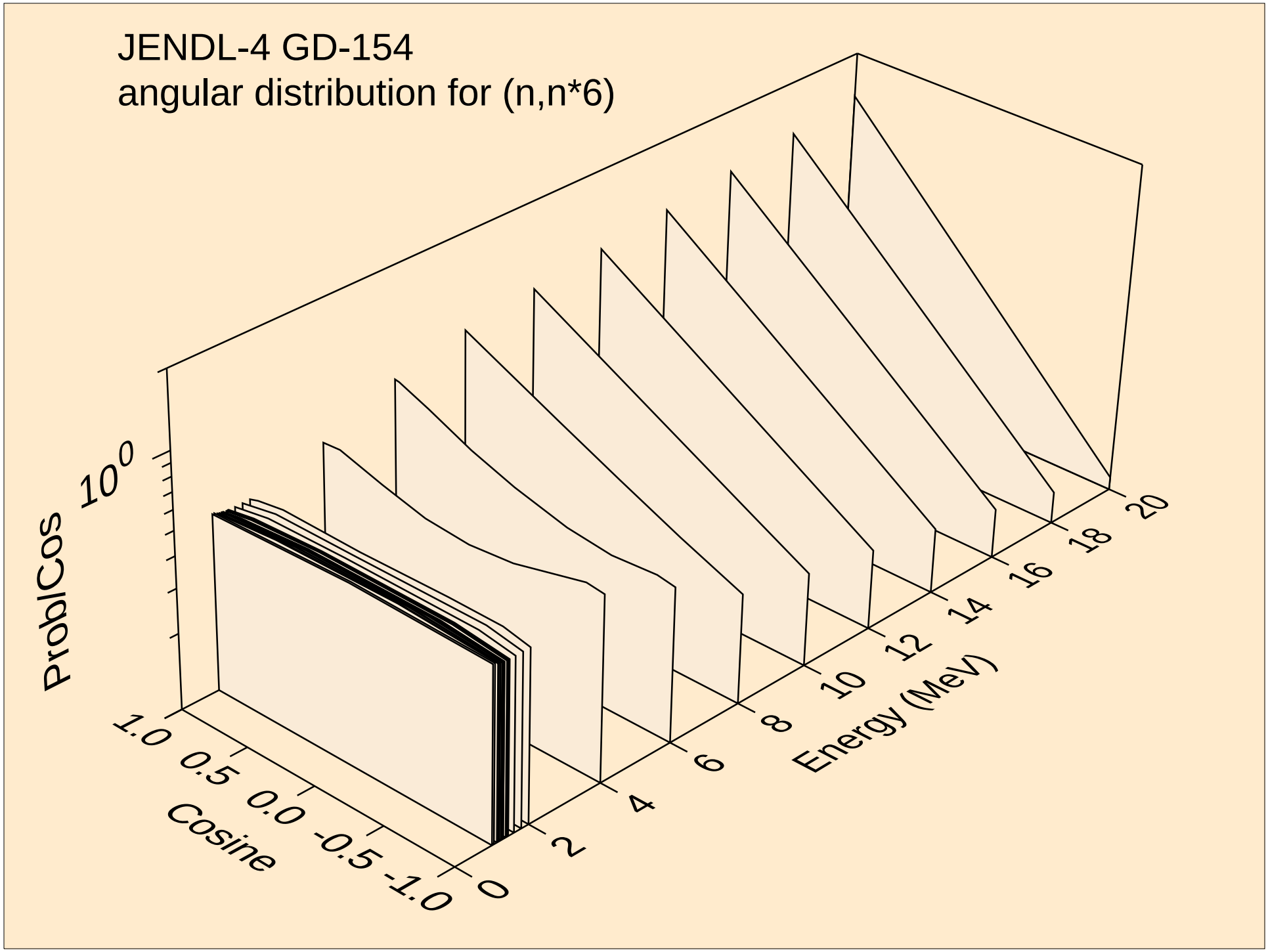
JENDL-4 GD-154
angular distribution for (n,n*6)
ProbCos
$10^0$
Cosine
1.0
0.5
0.0
-0.5
-1.0
Energy (MeV)
0
2
4
6
8
10
12
14
16
18
20

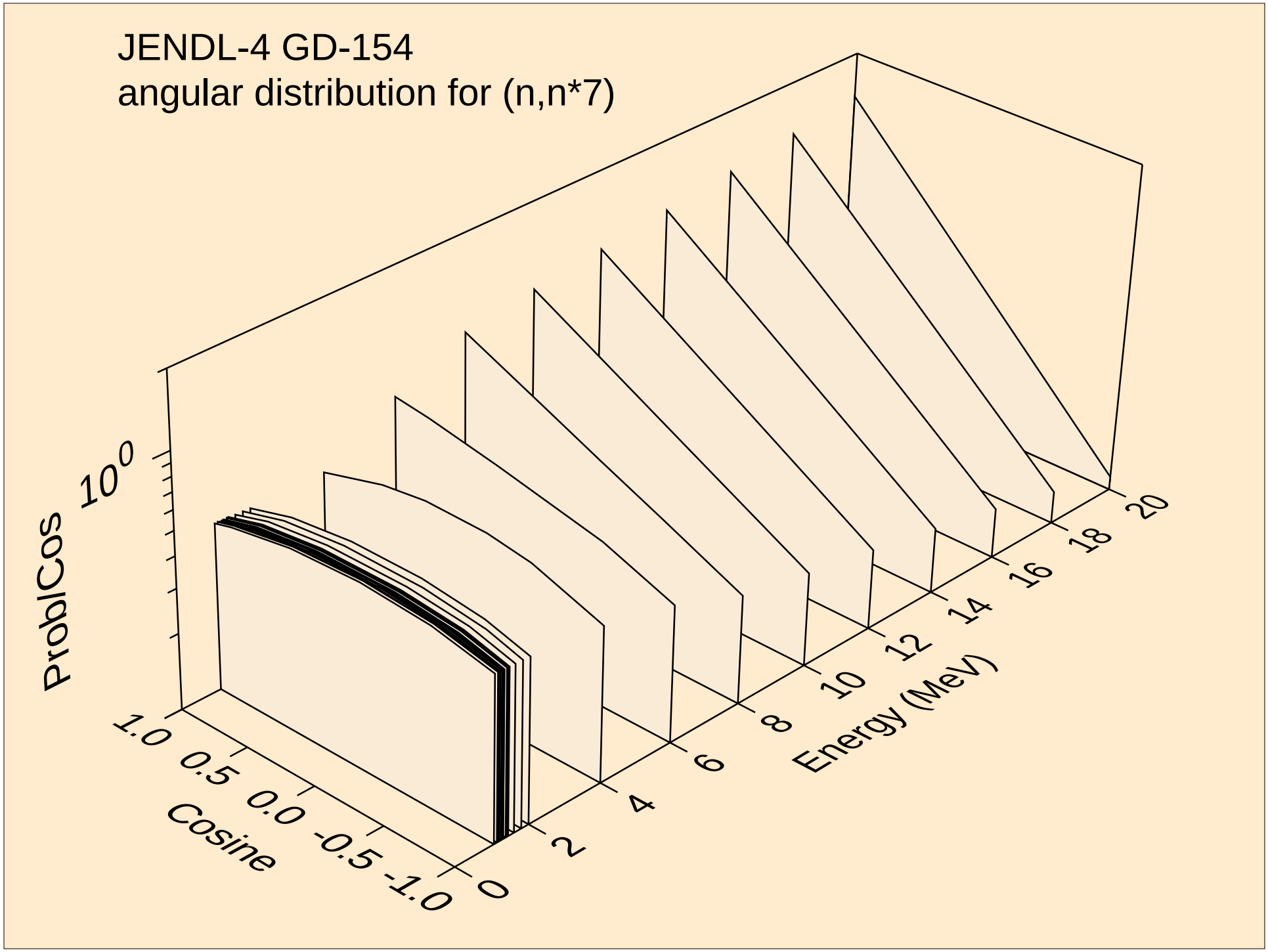
JENDL-4 GD-154
angular distribution for (n,n*7)
ProbCos
$10^0$
Cosine
1.0
0.5
0.0
-0.5
-1.0
Energy (MeV)
0
2
4
6
8
10
12
14
16
18
20

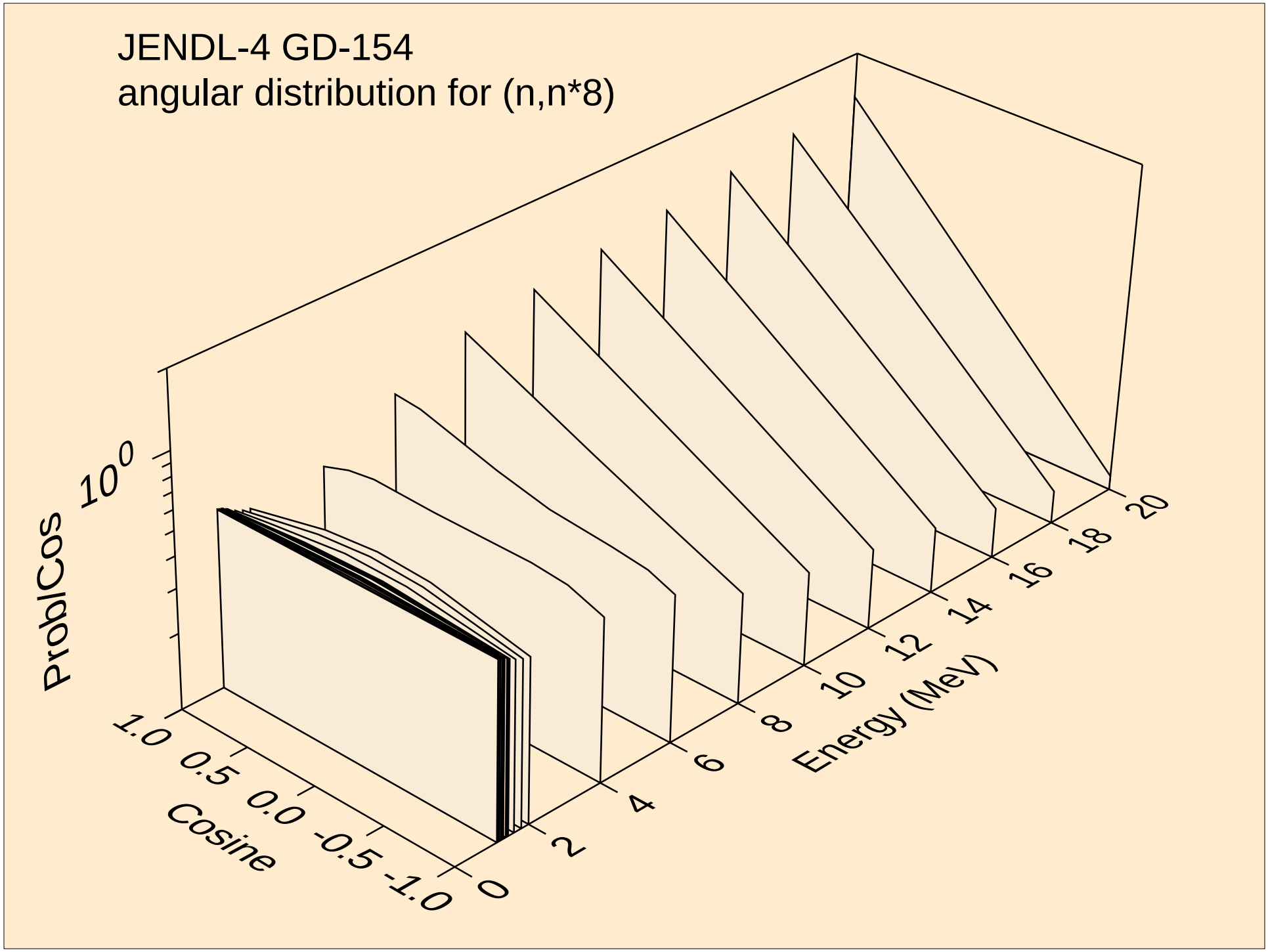
JENDL-4 GD-154
angular distribution for (n,n*8)
ProbCos
$10^0$
Cosine
1.0
0.5
0.0
-0.5
-1.0
Energy (MeV)
0
2
4
6
8
10
12
14
16
18
20

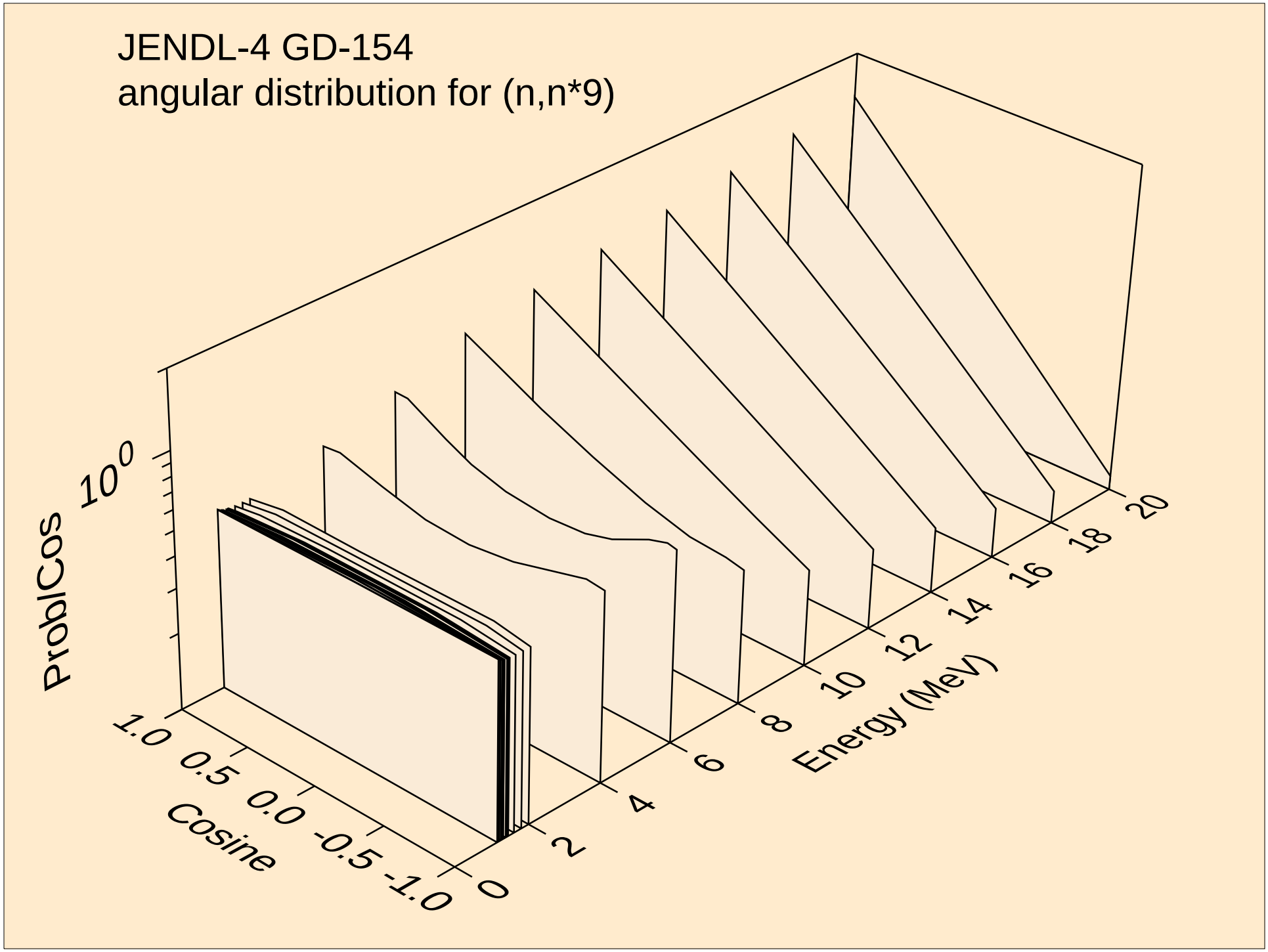
JENDL-4 GD-154
angular distribution for (n,n*9)
ProbCos
$10^0$
Cosine
1.0
0.5
0.0
-0.5
-1.0
Energy (MeV)
0
2
4
6
8
10
12
14
16
18
20

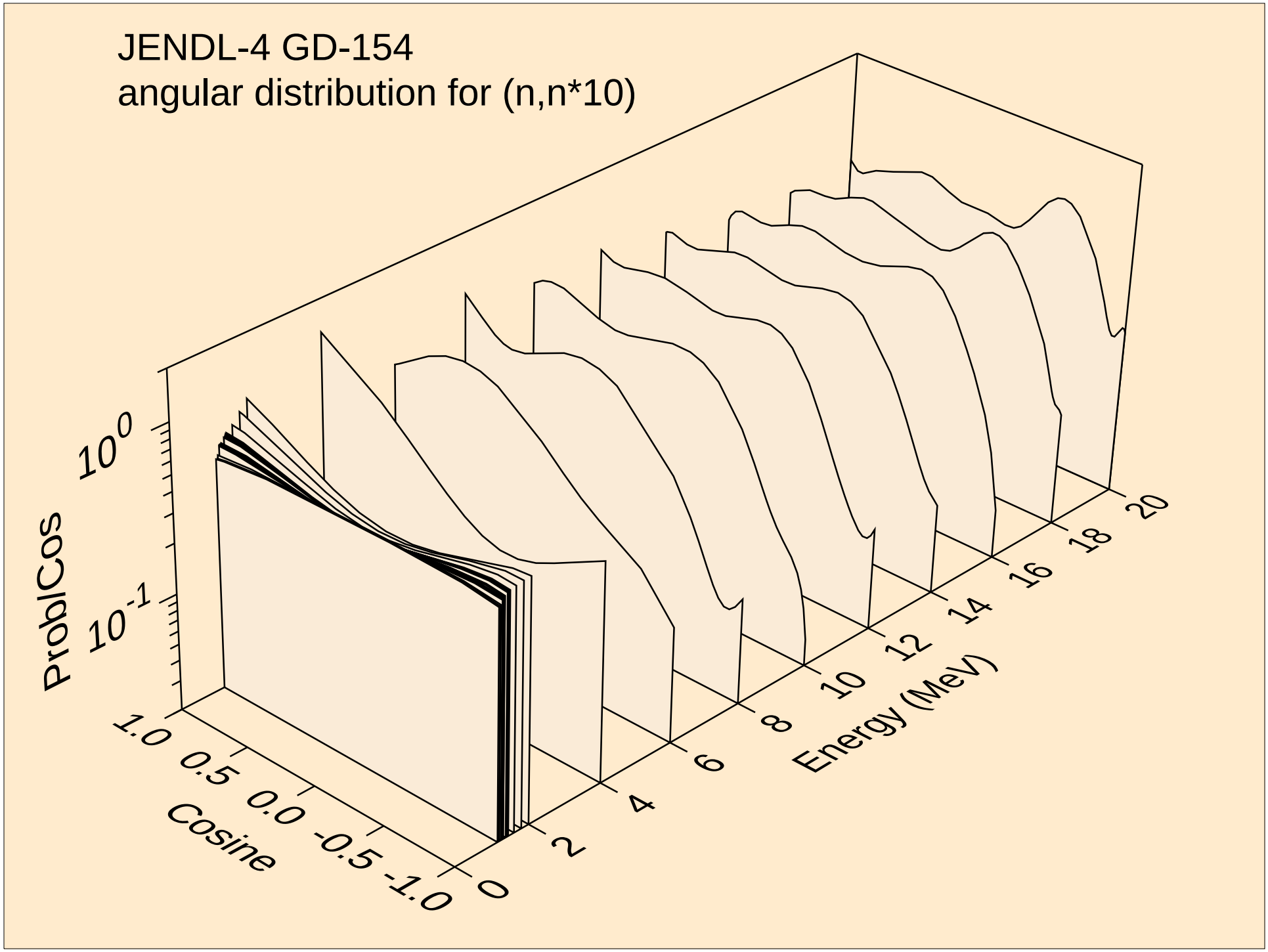
JENDL-4 GD-154
angular distribution for (n,n*10)
ProbCos
$10^0$
$10^{-1}$
Cosine
1.0
0.5
0.0
-0.5
-1.0
Energy (MeV)
0
2
4
6
8
10
12
14
16
18
20

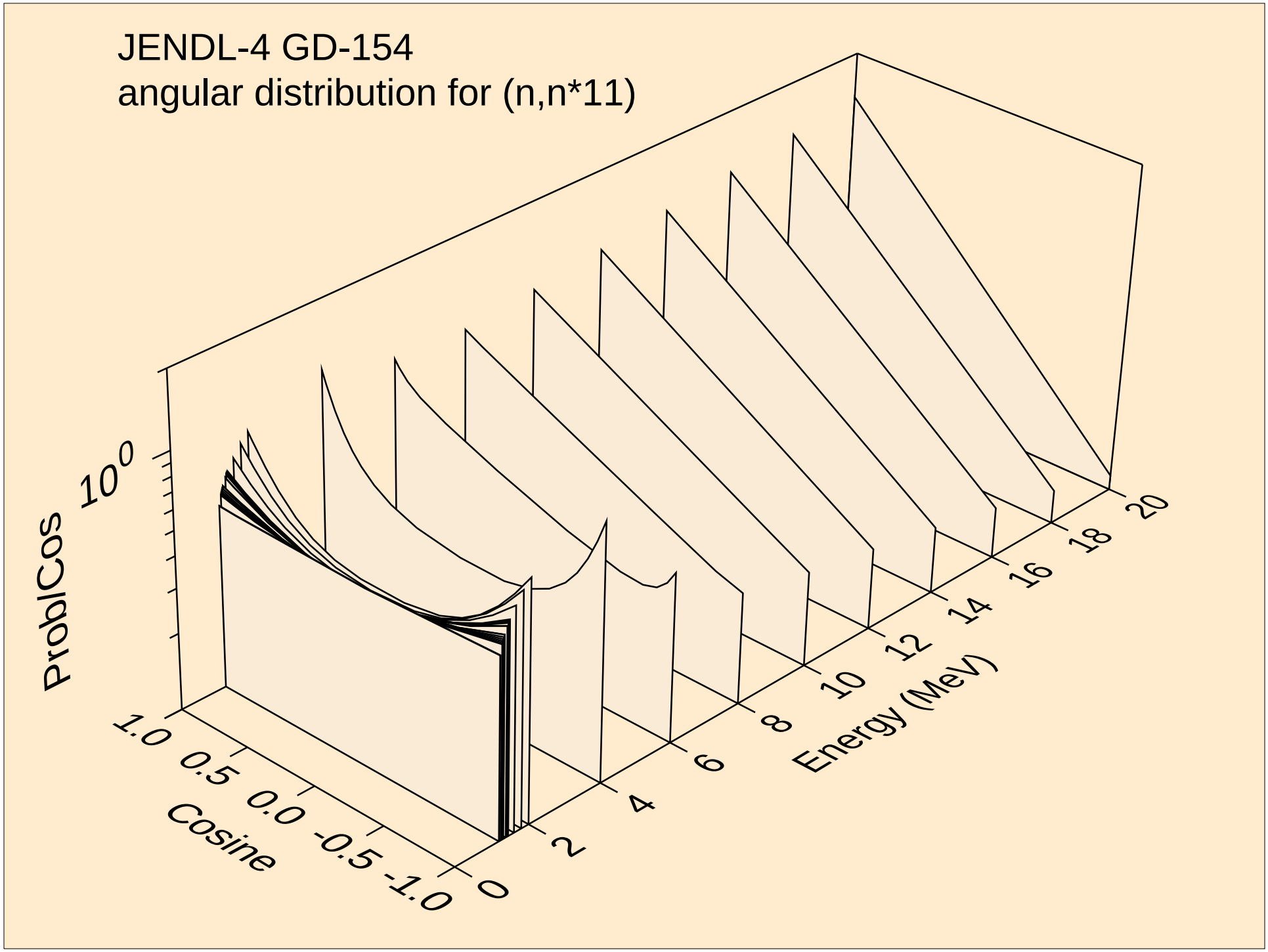
JENDL-4 GD-154
angular distribution for (n,n*11)
ProblCos
$10^0$
1.0
0.5
0.0
-0.5
-1.0
Cosine
0
2
4
6
8
10
12
14
16
18
20
Energy (MeV)

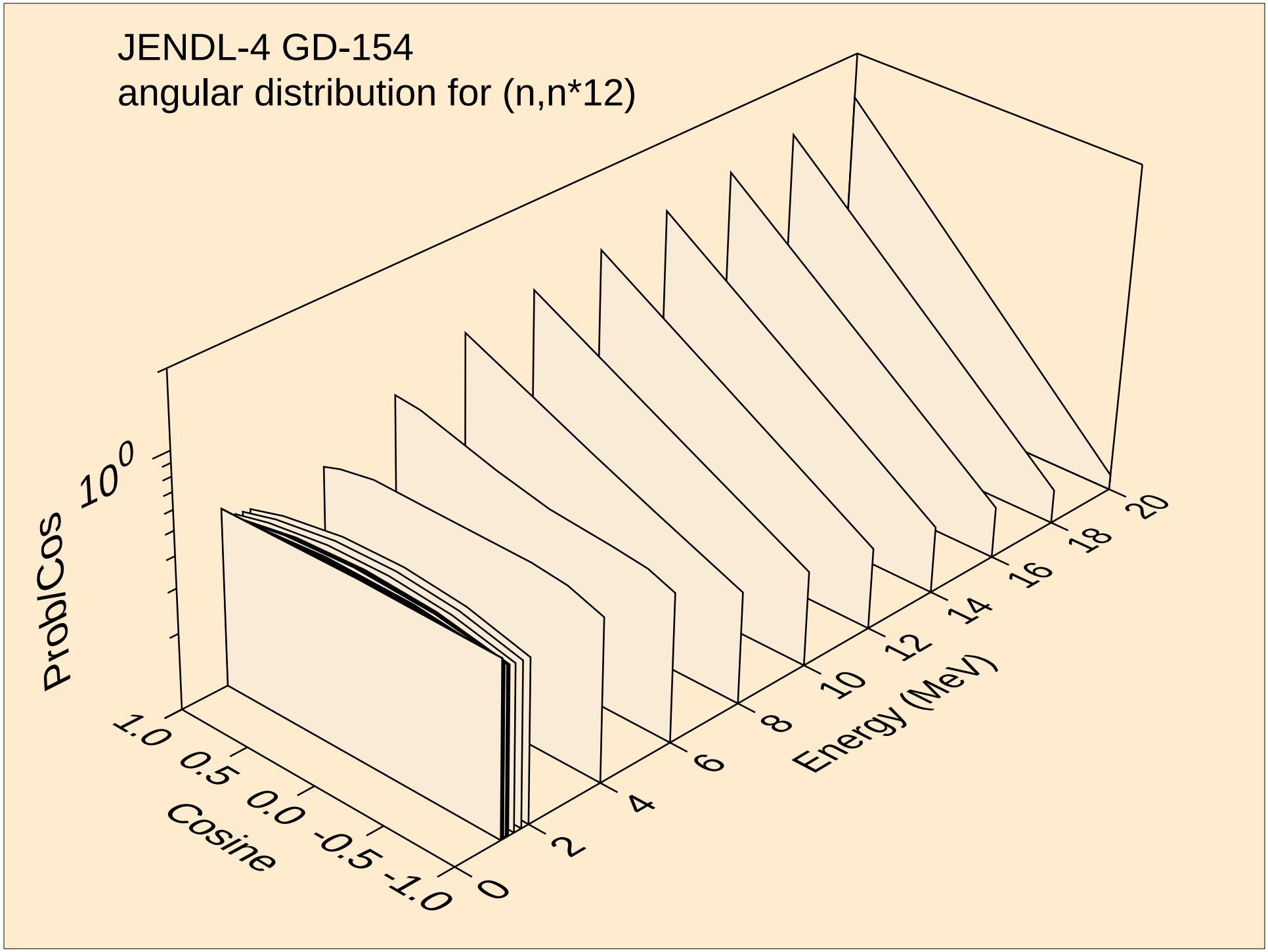
JENDL-4 GD-154
angular distribution for (n,n*12)
ProbCos
$10^0$
Cosine
1.0
0.5
0.0
-0.5
-1.0
Energy (MeV)
0
2
4
6
8
10
12
14
16
18
20

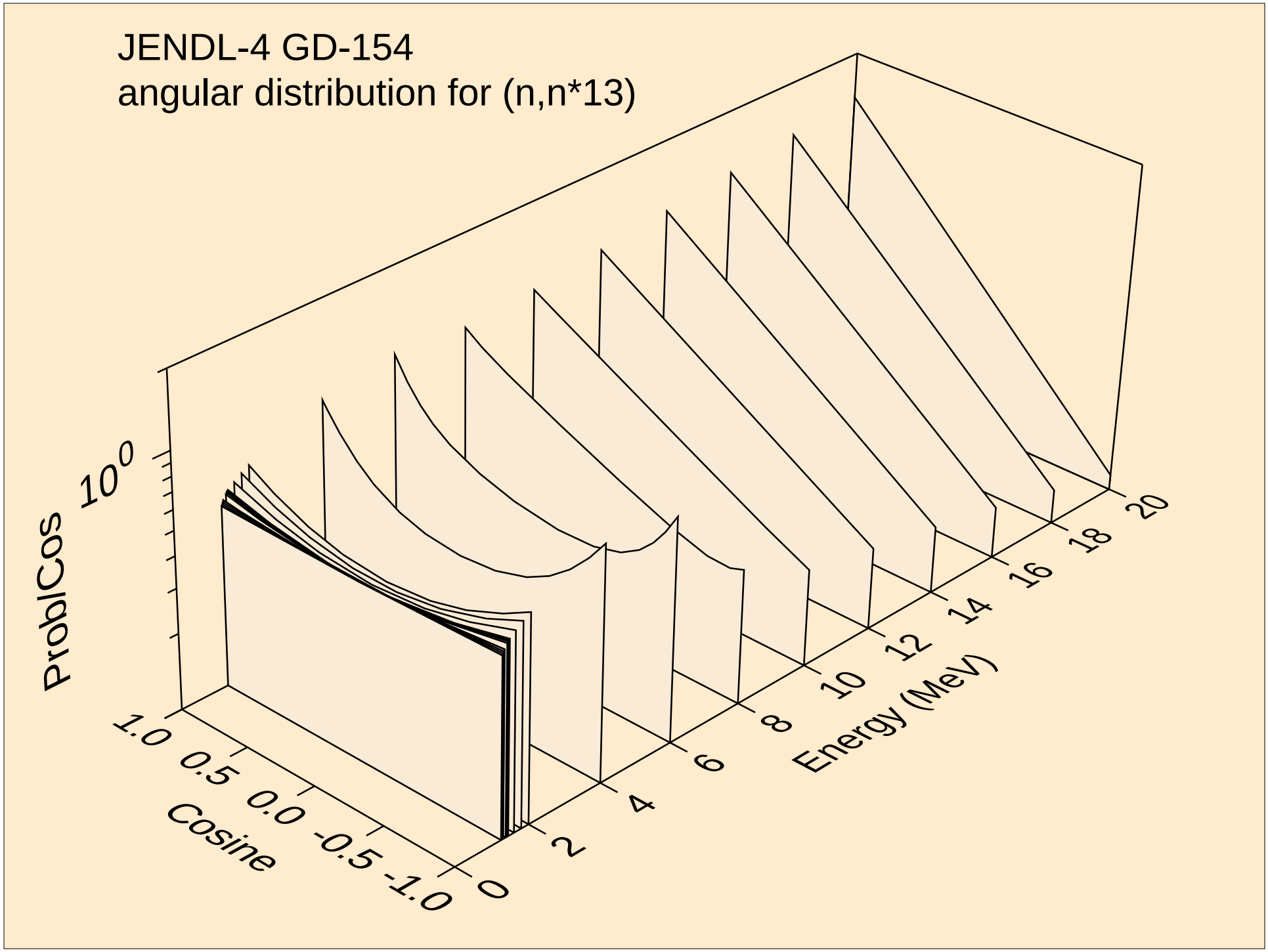
JENDL-4 GD-154
angular distribution for (n,n*13)
ProblCos
$10^0$
Cosine
1.0
0.5
0.0
-0.5
-1.0
Energy (MeV)
0
2
4
6
8
10
12
14
16
18
20

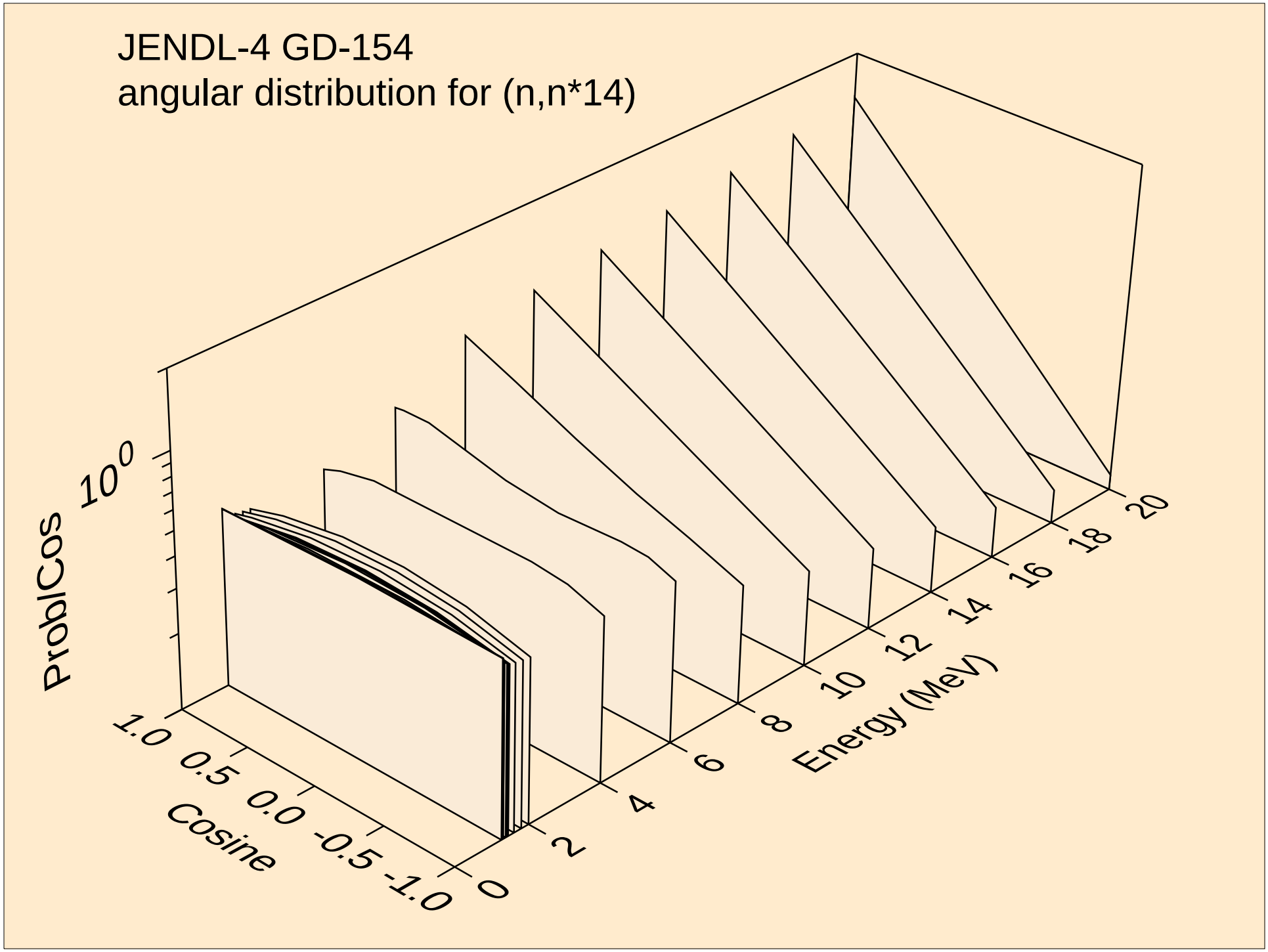
JENDL-4 GD-154
angular distribution for (n,n*14)
ProbCos
$10^0$
Cosine
1.0
0.5
0.0
-0.5
-1.0
Energy (MeV)
0
2
4
6
8
10
12
14
16
18
20

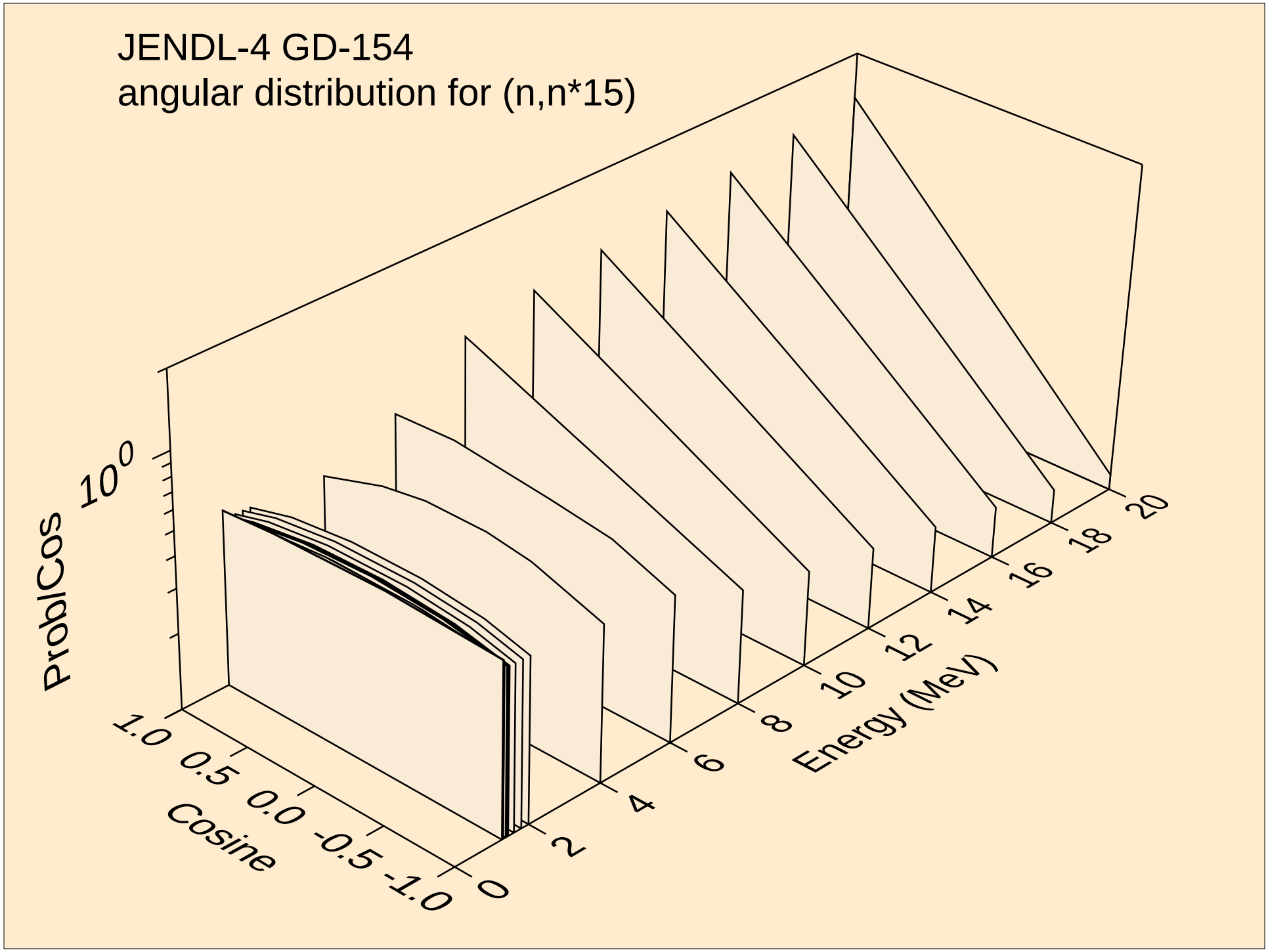
JENDL-4 GD-154
angular distribution for (n,n*15)
ProbCos
$10^0$
Cosine
1.0
0.5
0.0
-0.5
-1.0
Energy (MeV)
0
2
4
6
8
10
12
14
16
18
20

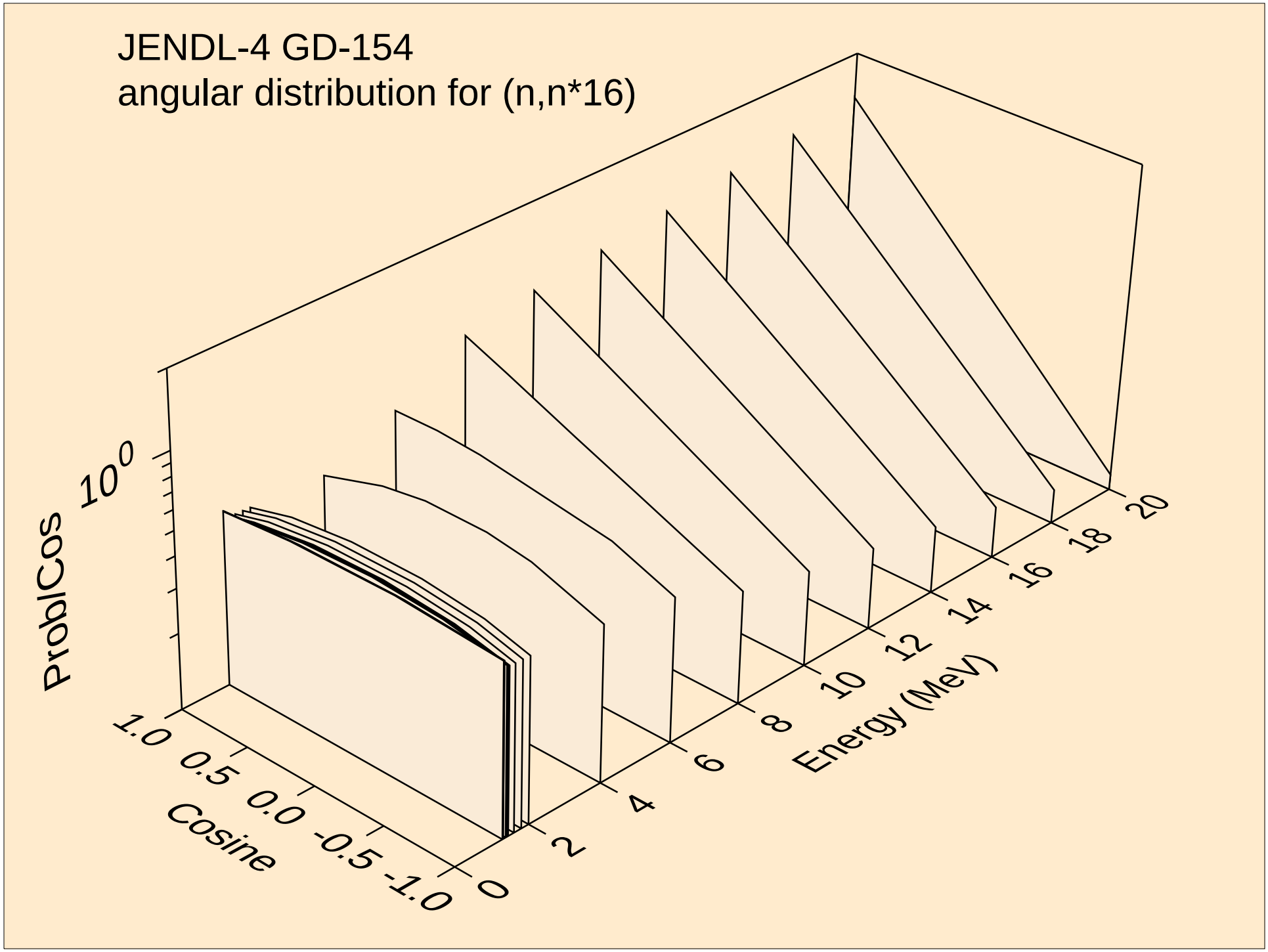
JENDL-4 GD-154
angular distribution for (n,n*16)
ProbCos
$10^0$
Cosine
1.0
0.5
0.0
-0.5
-1.0
Energy (MeV)
0
2
4
6
8
10
12
14
16
18
20

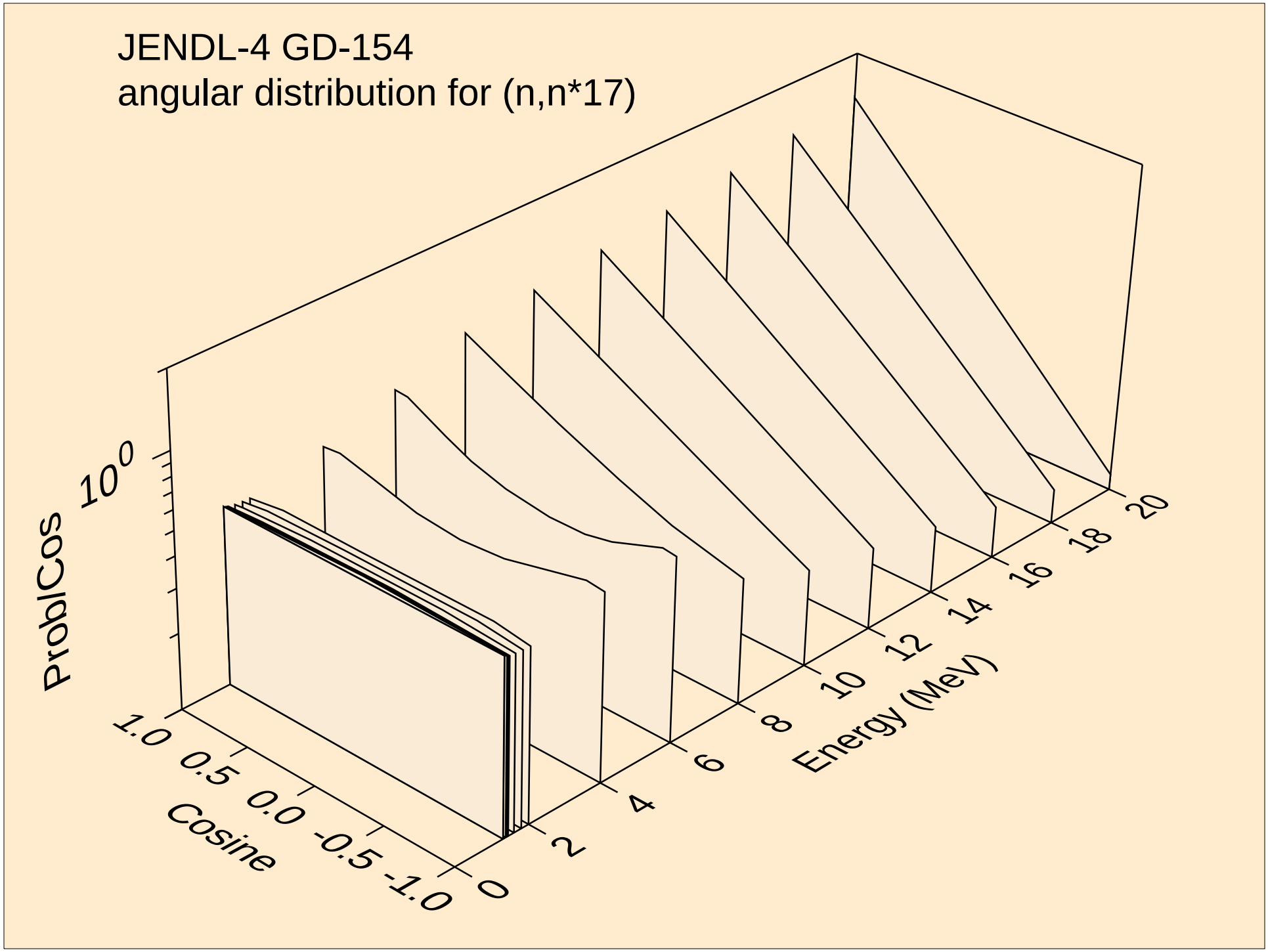
JENDL-4 GD-154
angular distribution for (n,n*17)
ProbCos
$10^0$
Cosine
1.0
0.5
0.0
-0.5
-1.0
Energy (MeV)
0
2
4
6
8
10
12
14
16
18
20

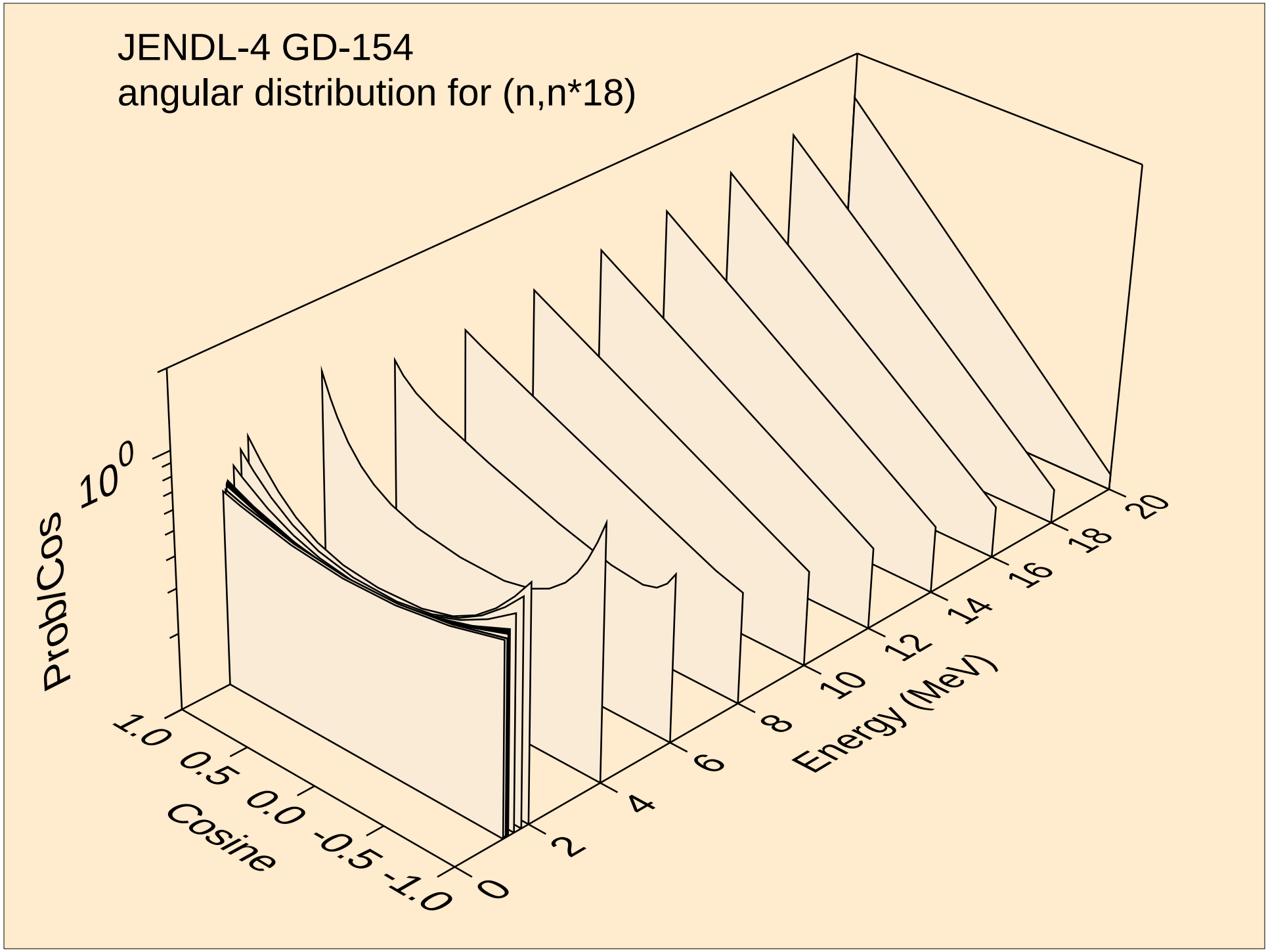
JENDL-4 GD-154
angular distribution for (n,n*18)
ProblCos
$10^0$
Cosine
1.0
0.5
0.0
-0.5
-1.0
Energy (MeV)
0
2
4
6
8
10
12
14
16
18
20

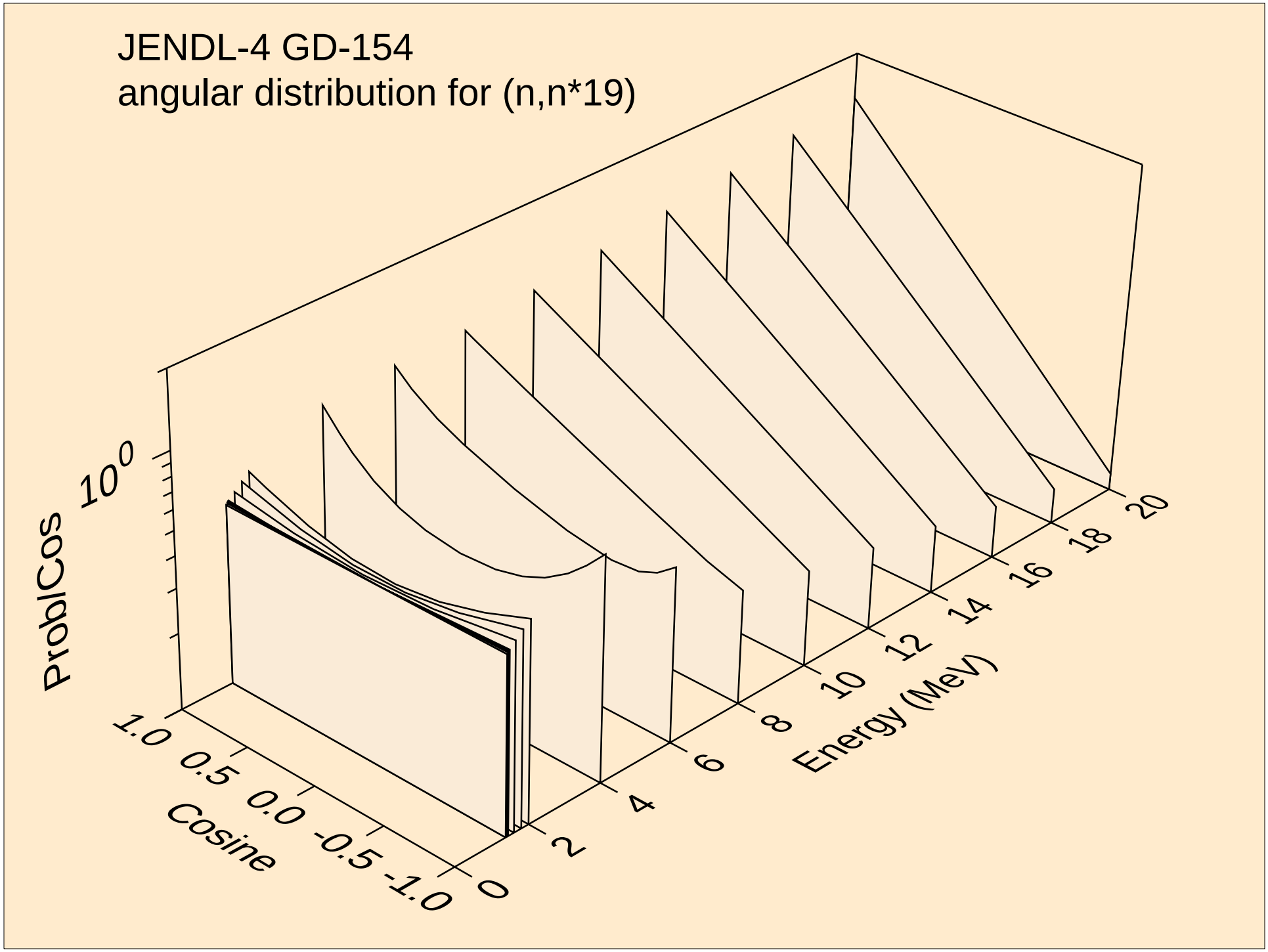
JENDL-4 GD-154
angular distribution for (n,n*19)
ProbCos
$10^0$
Cosine
1.0
0.5
0.0
-0.5
-1.0
Energy (MeV)
0
2
4
6
8
10
12
14
16
18
20

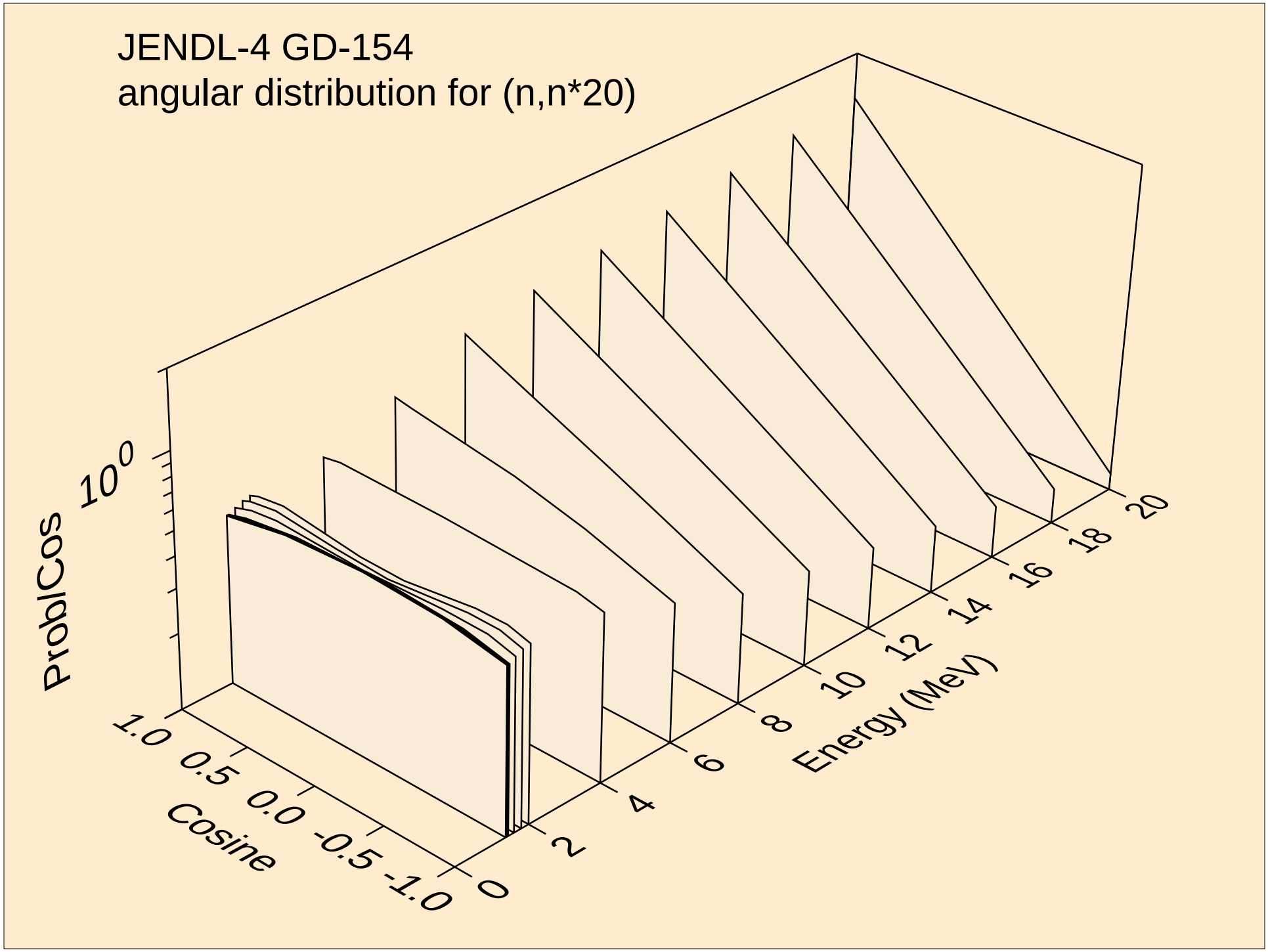
JENDL-4 GD-154
angular distribution for (n,n*20)
ProbCos
$10^0$
Cosine
1.0
0.5
0.0
-0.5
-1.0
Energy (MeV)
0
2
4
6
8
10
12
14
16
18
20

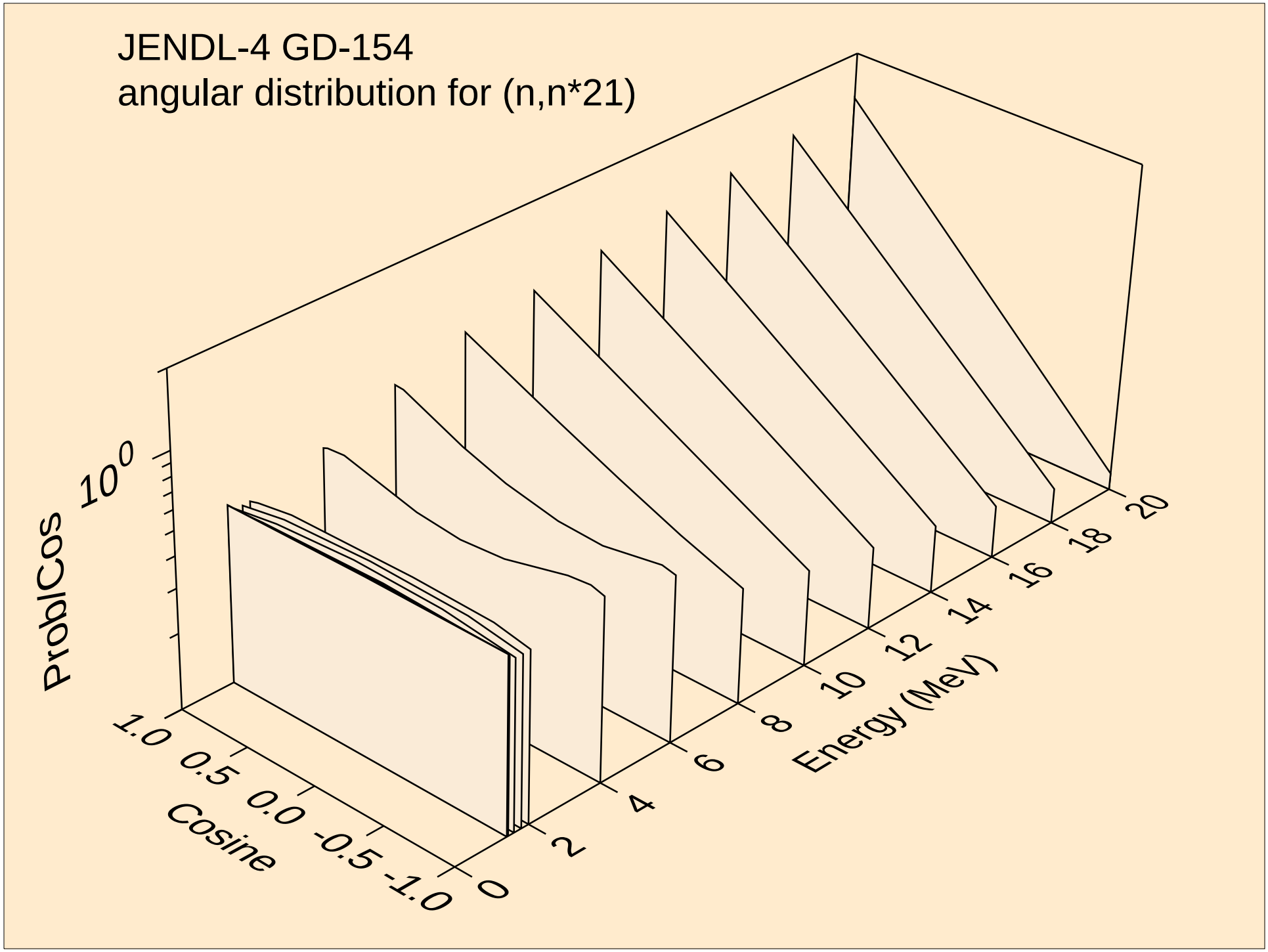
JENDL-4 GD-154
angular distribution for (n,n*21)
ProbCos
$10^0$
Cosine
1.0
0.5
0.0
-0.5
-1.0
Energy (MeV)
0
2
4
6
8
10
12
14
16
18
20

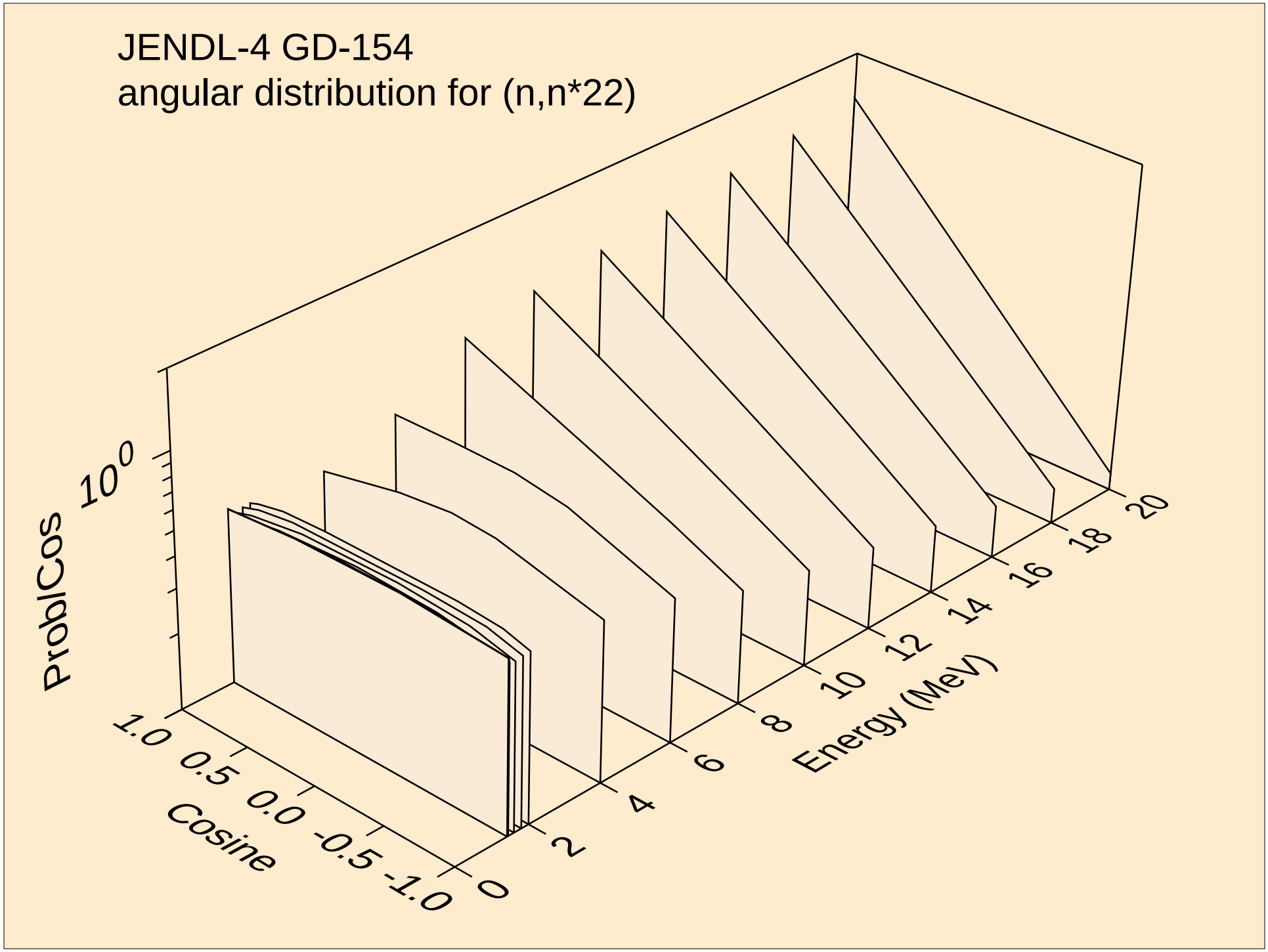
JENDL-4 GD-154
angular distribution for (n,n*22)
ProblCos
$10^0$
1.0
0.5
0.0
-0.5
-1.0
Cosine
0
2
4
6
8
10
12
14
16
18
20
Energy (MeV)

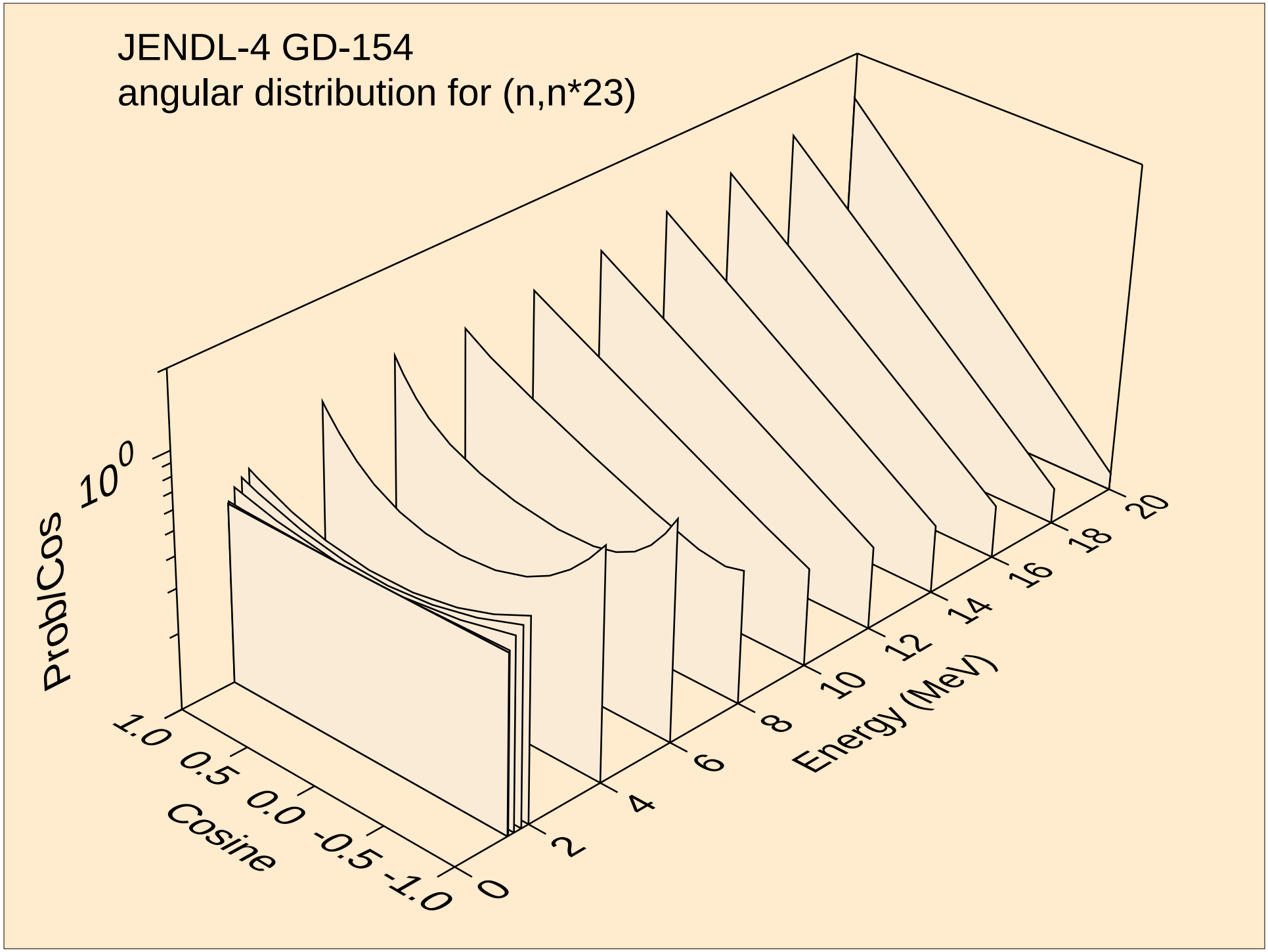
JENDL-4 GD-154
angular distribution for (n,n*23)
ProblCos
$10^0$
1.0
0.5
0.0
-0.5
-1.0
Cosine
0
2
4
6
8
10
12
14
16
18
20
Energy (MeV)

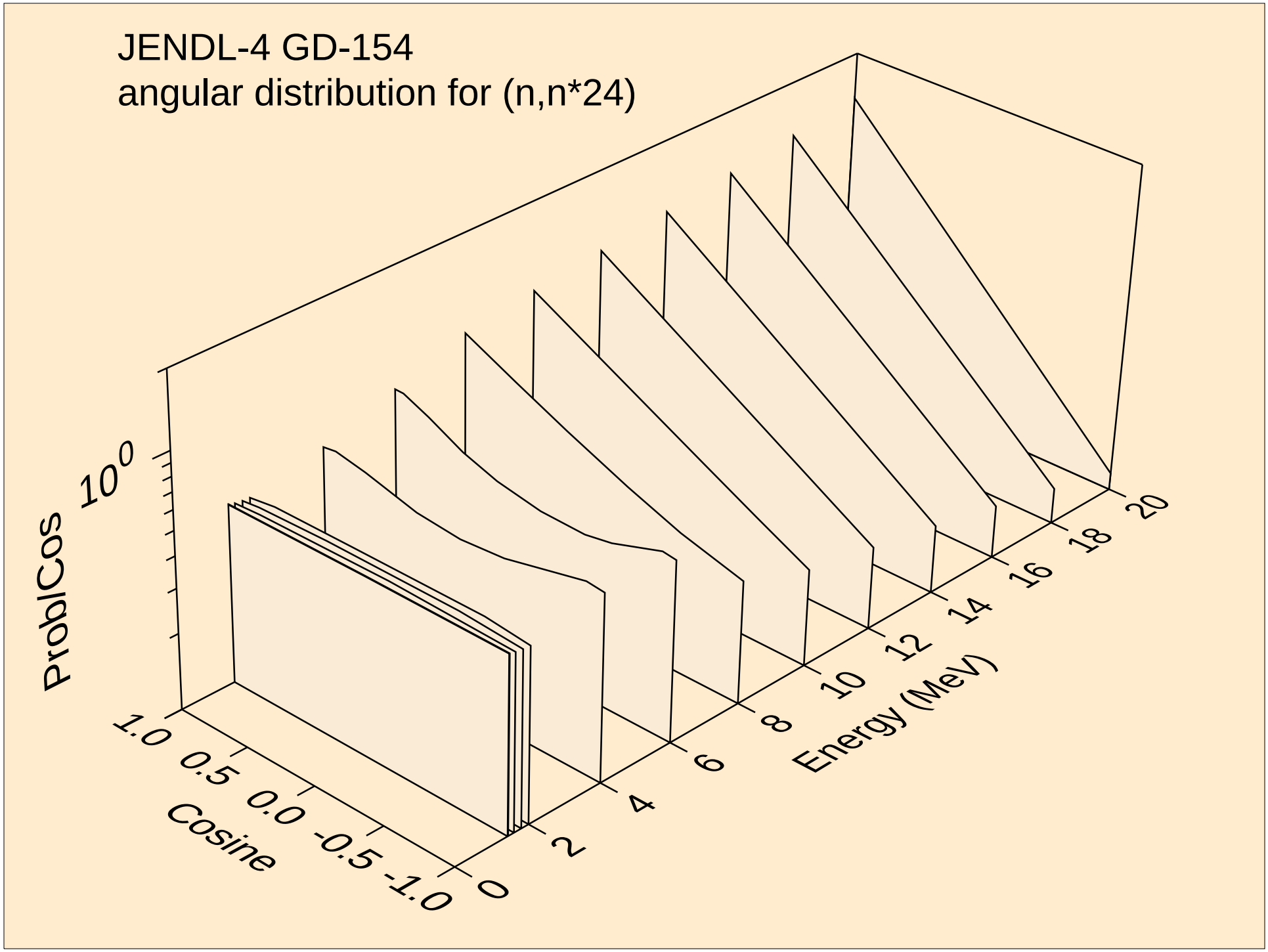
JENDL-4 GD-154
angular distribution for (n,n*24)
ProbCos
$10^0$
Cosine
1.0
0.5
0.0
-0.5
-1.0
Energy (MeV)
0
2
4
6
8
10
12
14
16
18
20

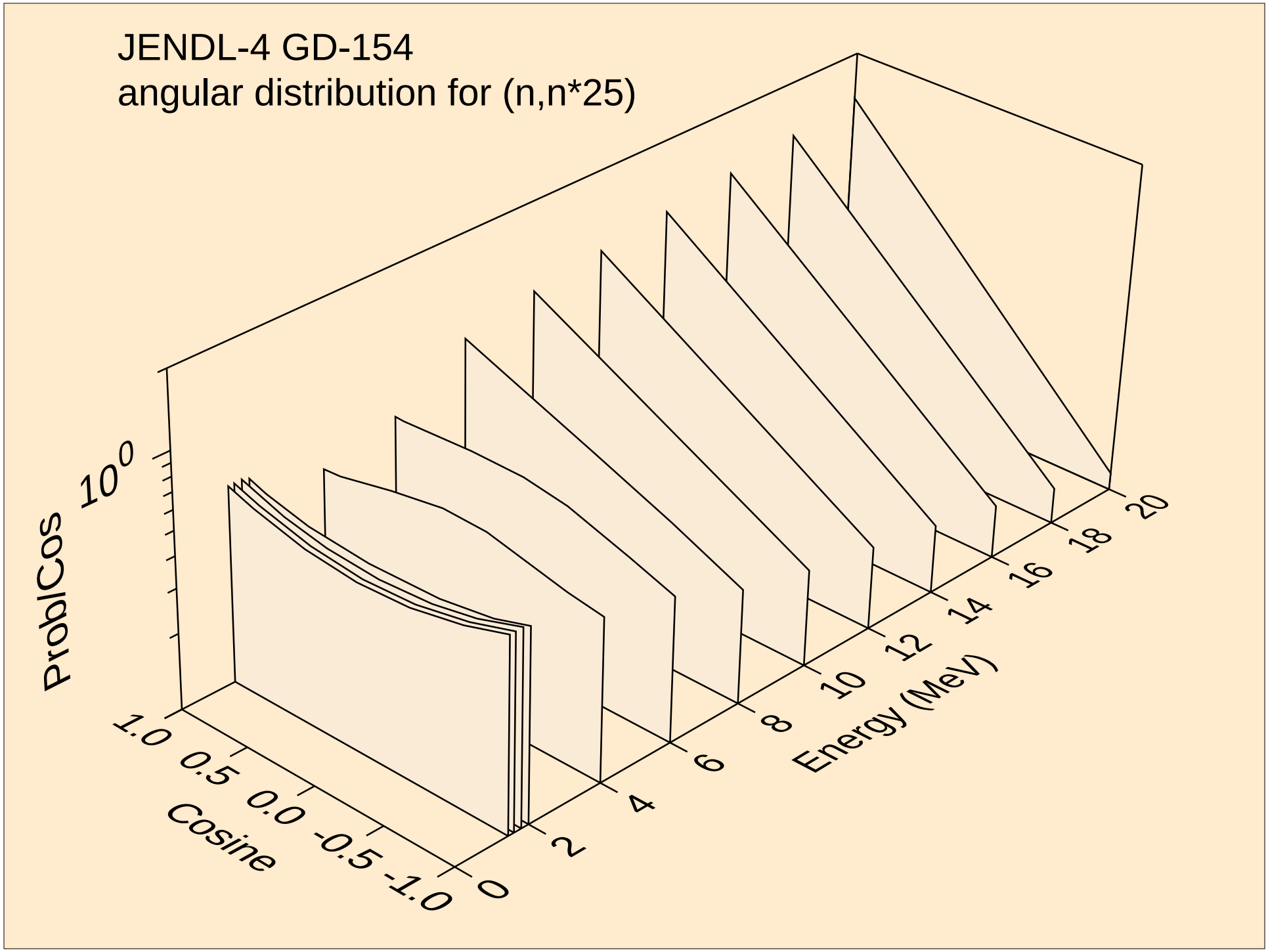
JENDL-4 GD-154
angular distribution for (n,n*25)
ProblCos
$10^0$
Cosine
1.0
0.5
0.0
-0.5
-1.0
Energy (MeV)
0
2
4
6
8
10
12
14
16
18
20

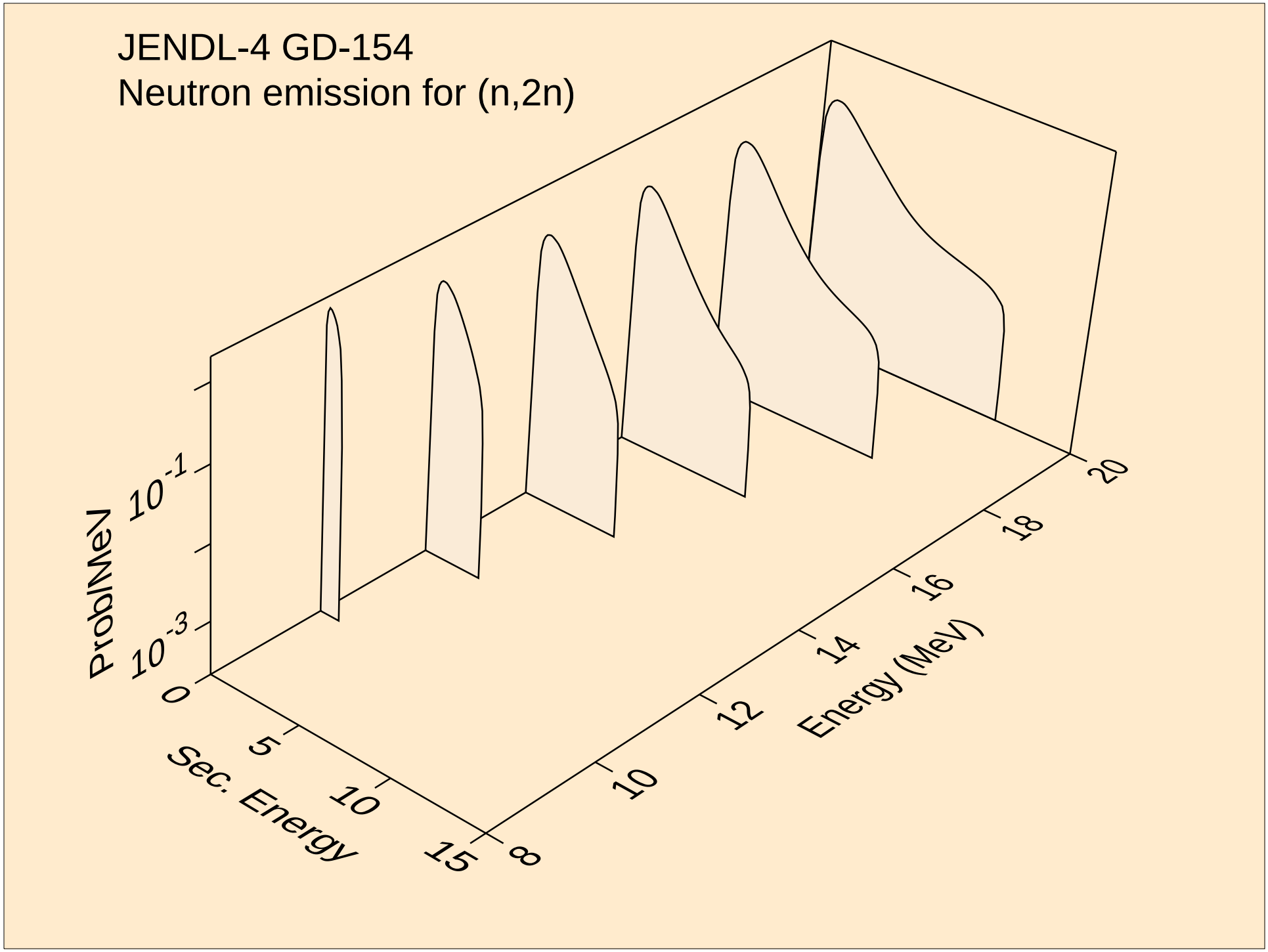
JENDL-4 GD-154
Neutron emission for (n,2n)
Prob/MeV
10-1
10-3
0
5
10
15
Sec. Energy
8
10
12
14
16
18
20
Energy (MeV)

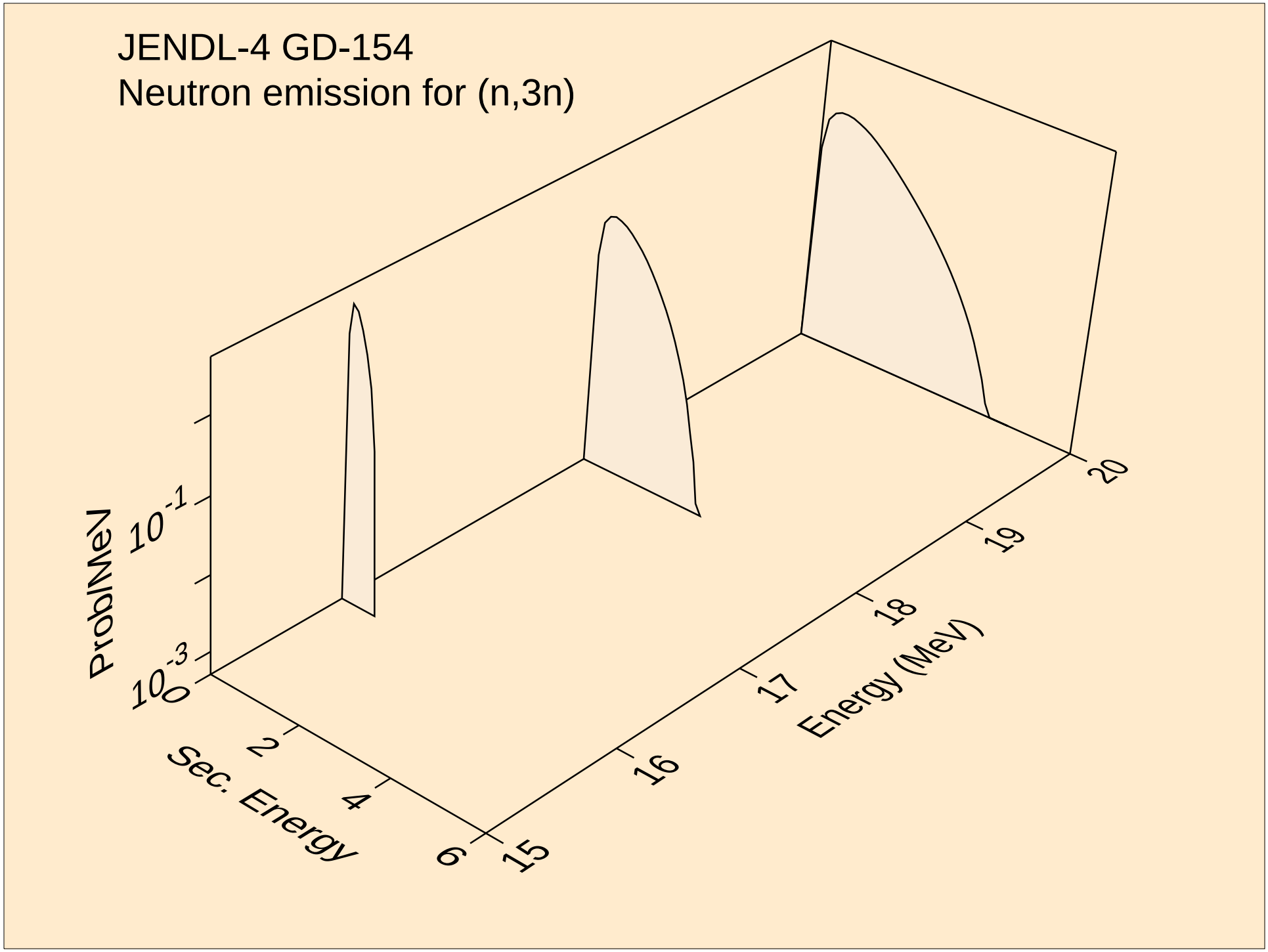
JENDL-4 GD-154
Neutron emission for (n,3n)
Prob/MeV
$10^{-1}$
$10^{-3}$
0
2
4
6
Sec. Energy
15
16
17
18
19
20
Energy (MeV)

JENDL-4 GD-154
Neutron emission for (n,n*)a

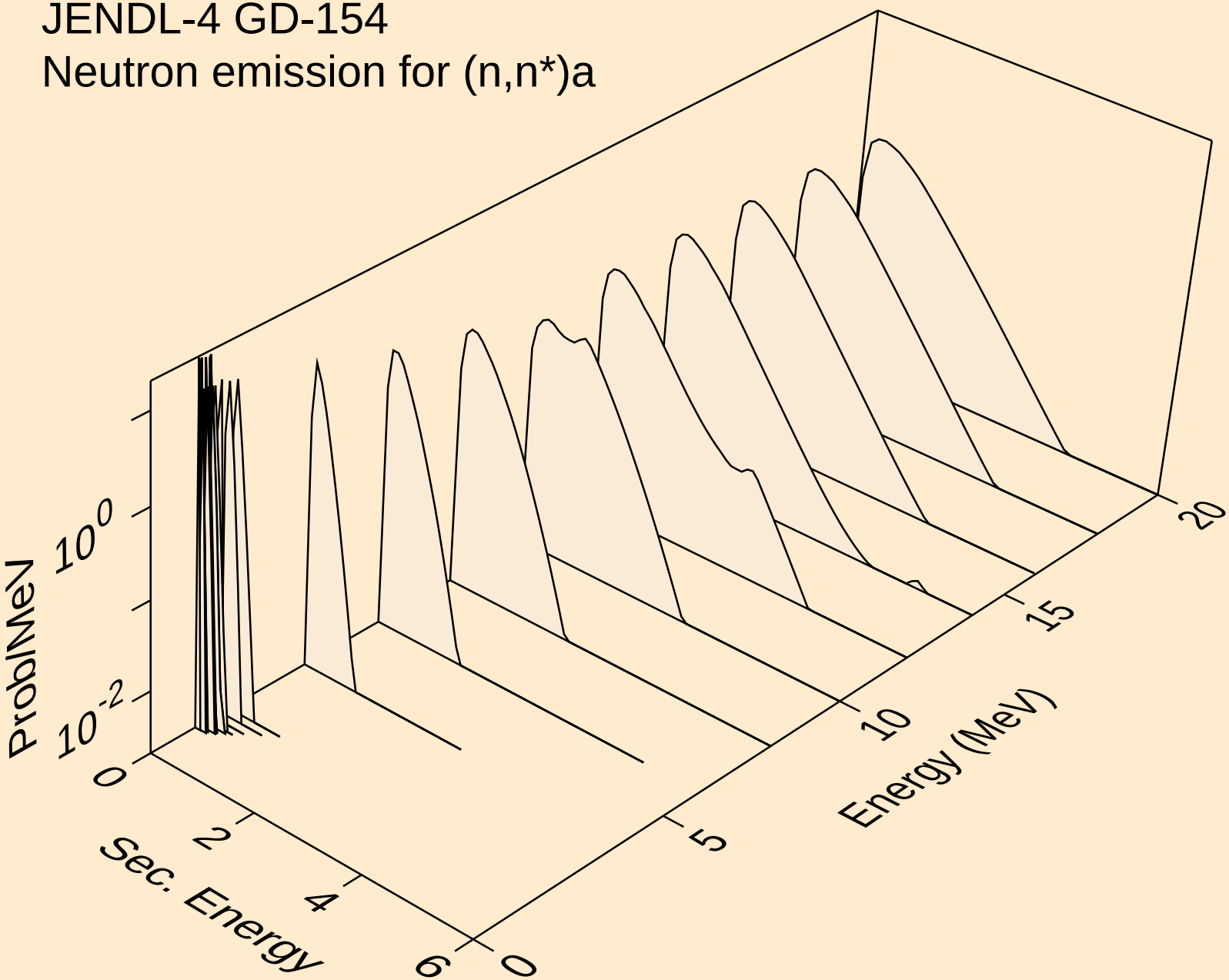

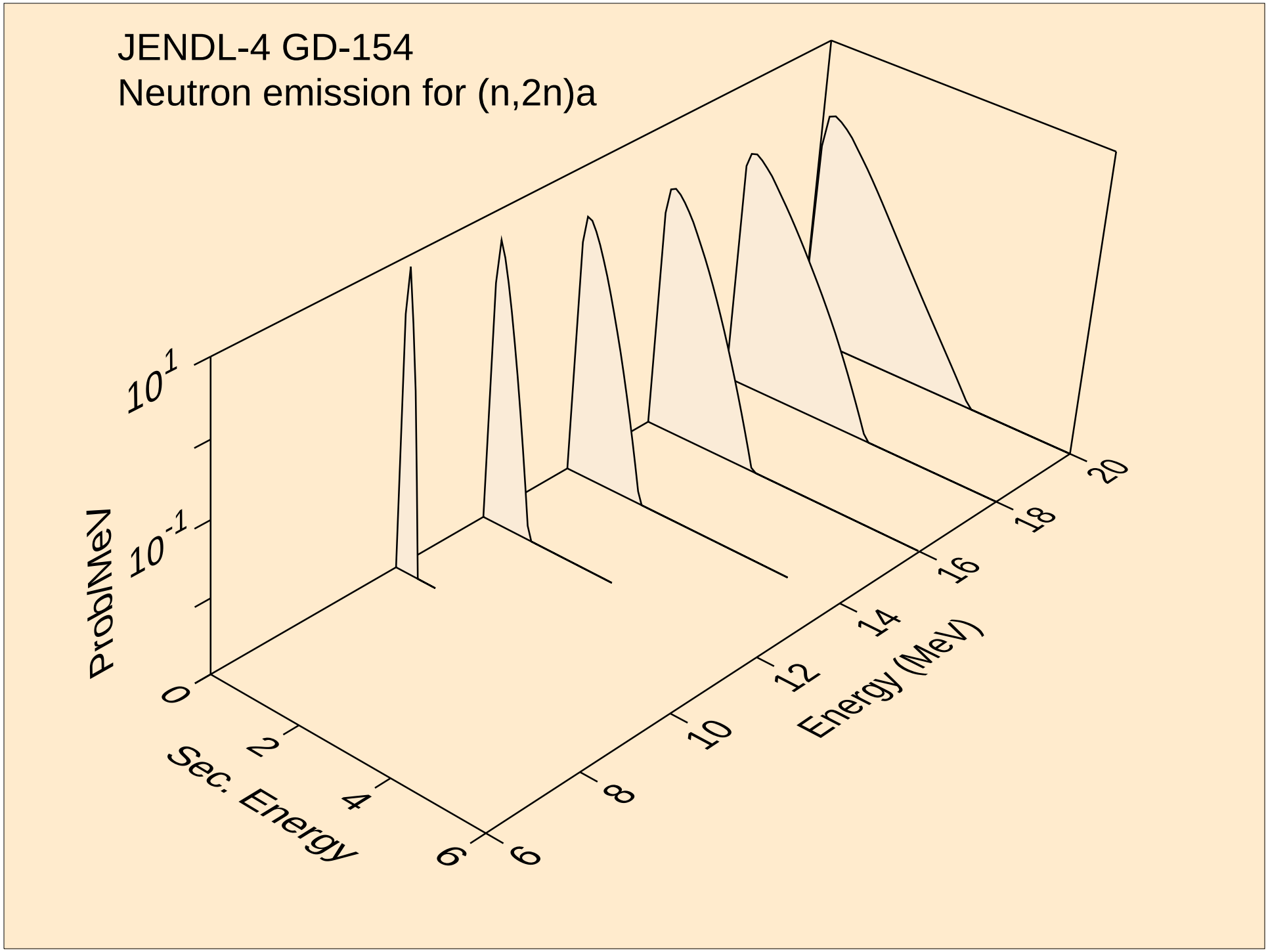
JENDL-4 GD-154
Neutron emission for (n,2n)a
Prob/MeV
10^1
10^-1
0
Sec. Energy
2
4
6
Energy (MeV)
6
8
10
12
14
16
18
20

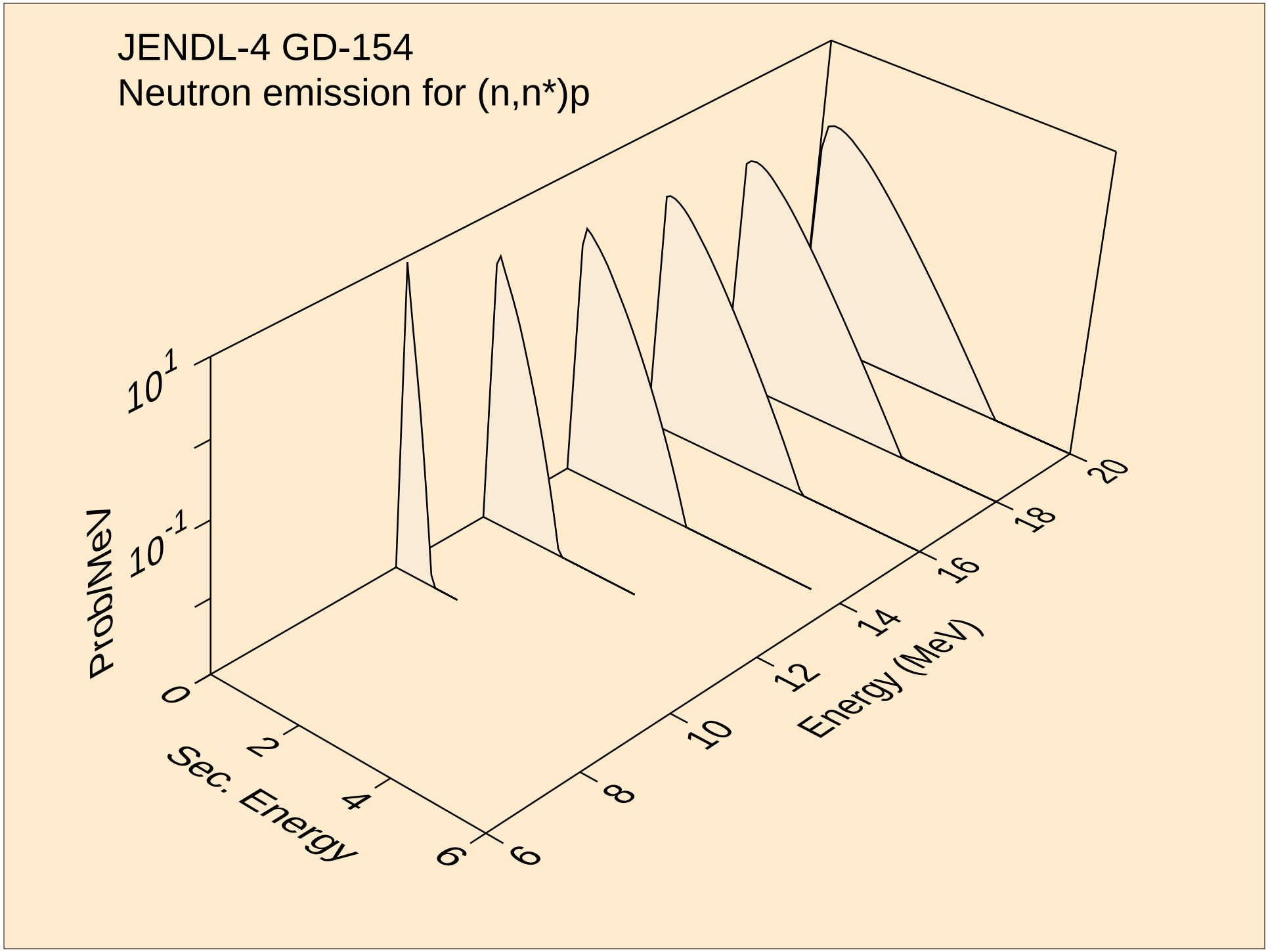
JENDL-4 GD-154
Neutron emission for (n,n*)p
Prob/MeV
$10^{1}$
$10^{-1}$
0
Sec. Energy
2
4
6
Energy (MeV)
6
8
10
12
14
16
18
20

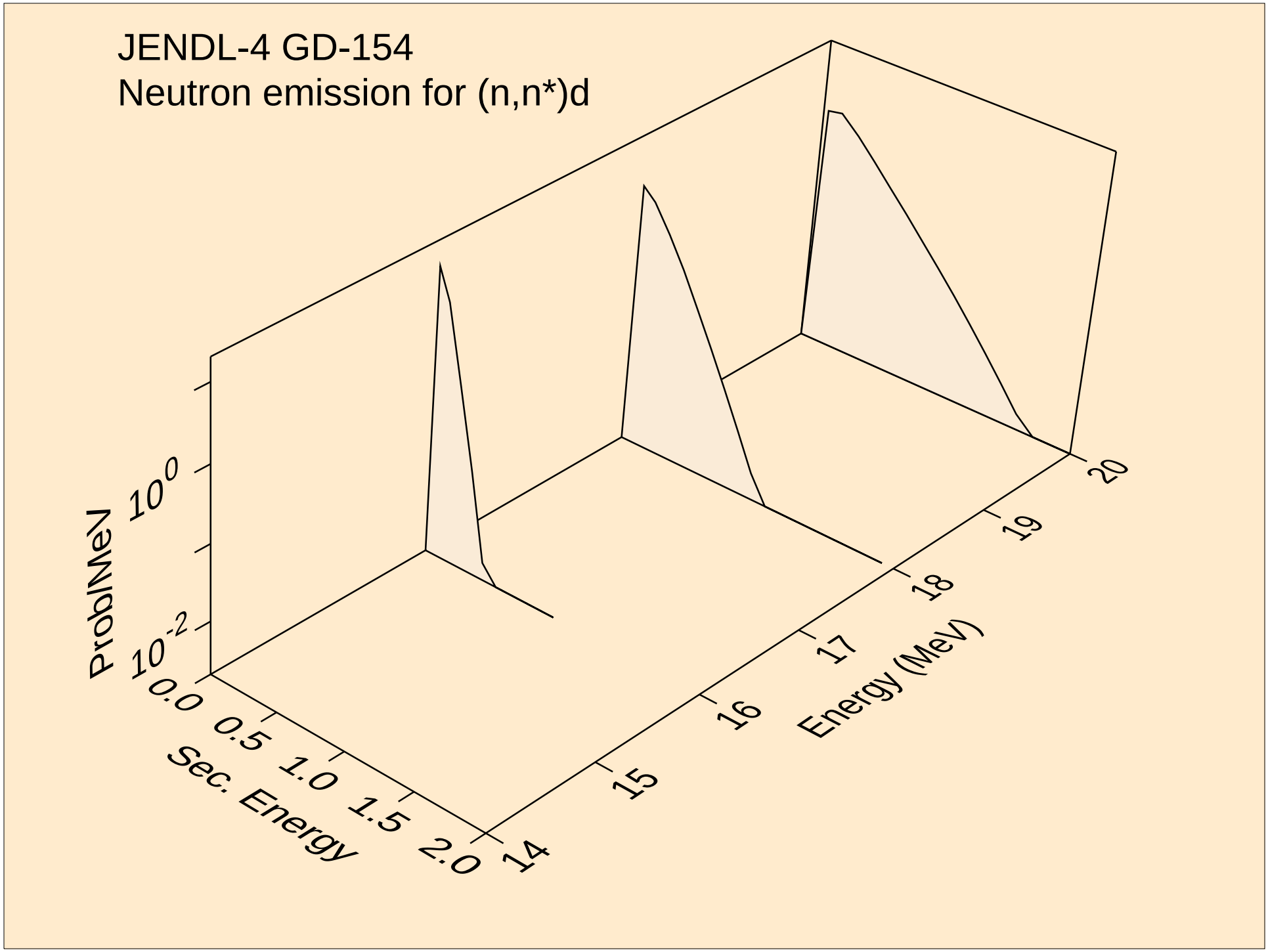
JENDL-4 GD-154
Neutron emission for (n,n*)d
Prob/MeV
$10^{0}$
$10^{-2}$
0.0
0.5
1.0
1.5
2.0
Sec. Energy
14
15
16
17
18
19
20
Energy (MeV)

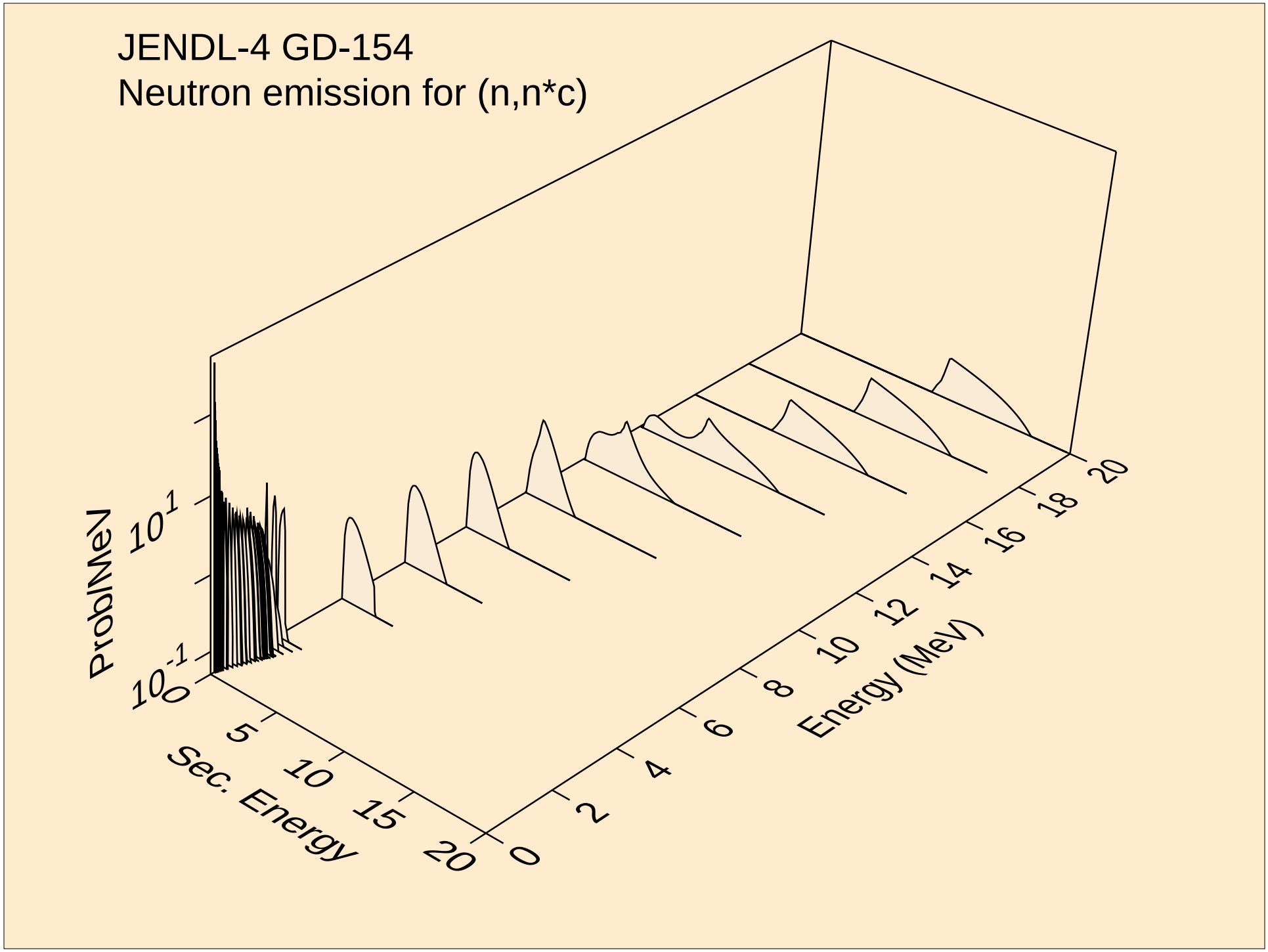
JENDL-4 GD-154
Neutron emission for (n,n*c)
Prob/MeV
$10^{1}$
$10^{-1}$
0
5
10
15
20
Sec. Energy
0
2
4
6
8
10
12
14
16
18
20
Energy (MeV)

JENDL-4 GD-154
Photon emission for (n,2n)

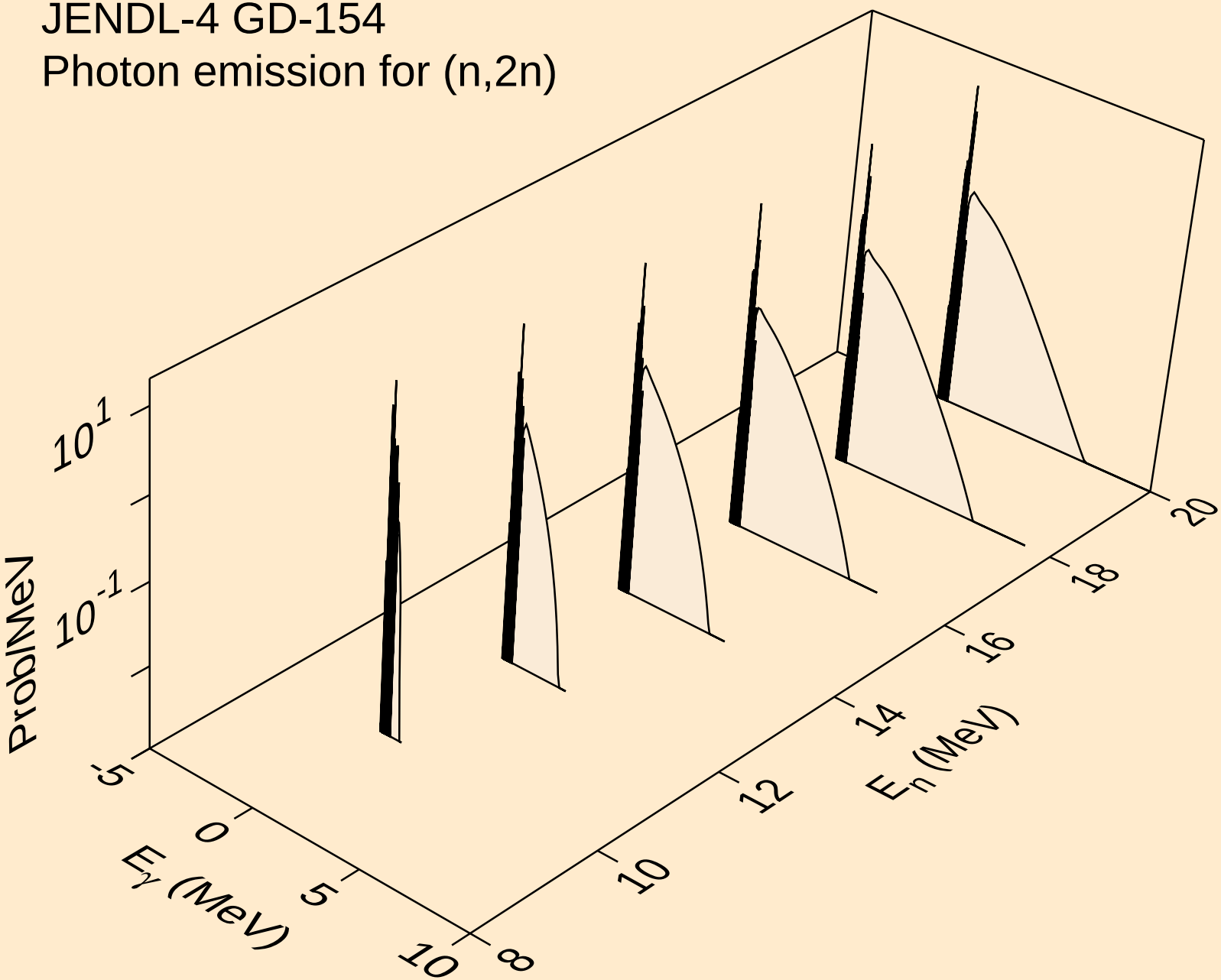

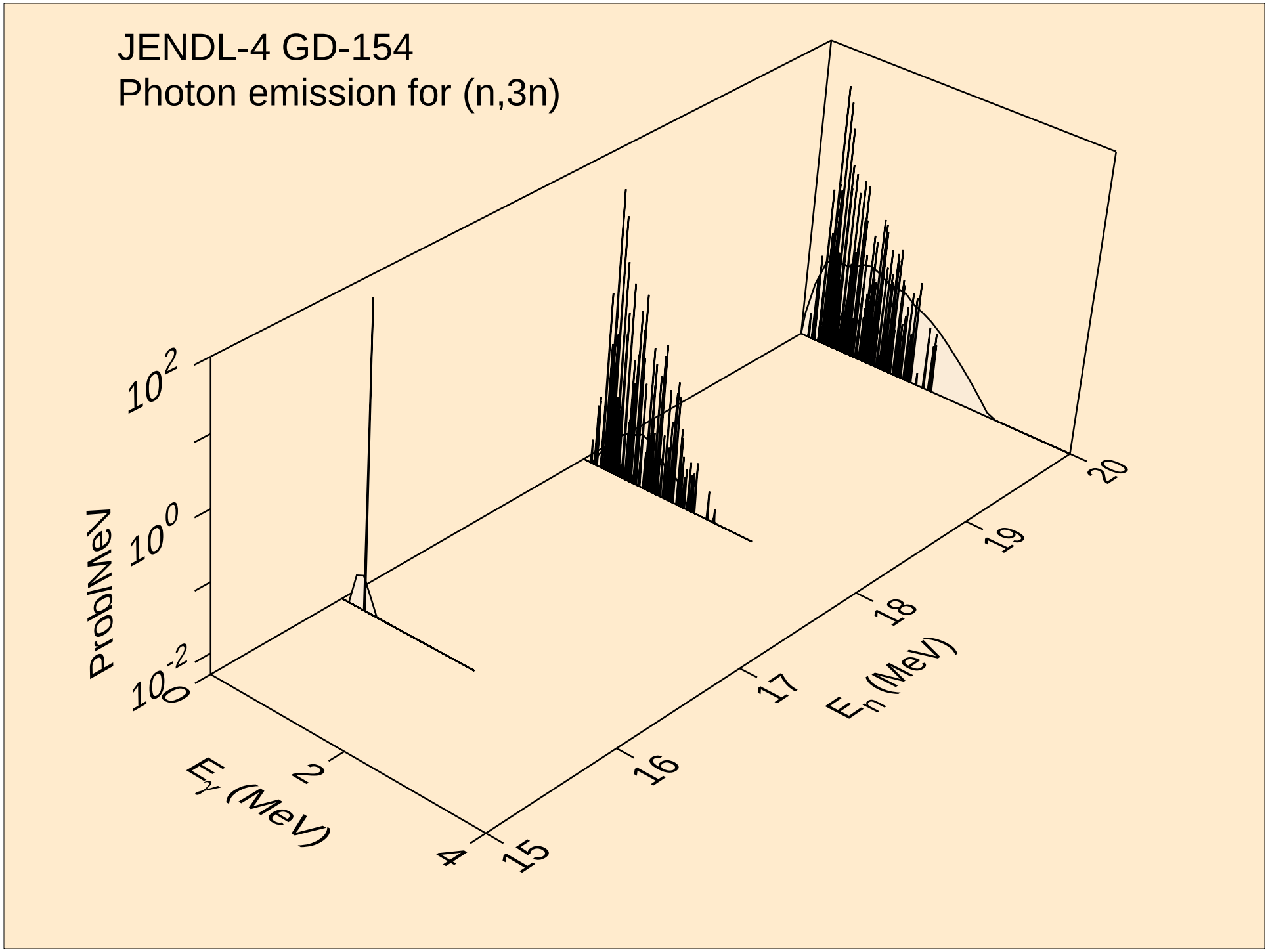
JENDL-4 GD-154
Photon emission for (n,3n)
Prob/MeV
$10^{2}$
$10^{0}$
$10^{-2}$
0
2
4
$E_\gamma$ (MeV)
15
16
17
18
19
20
$E_n$ (MeV)

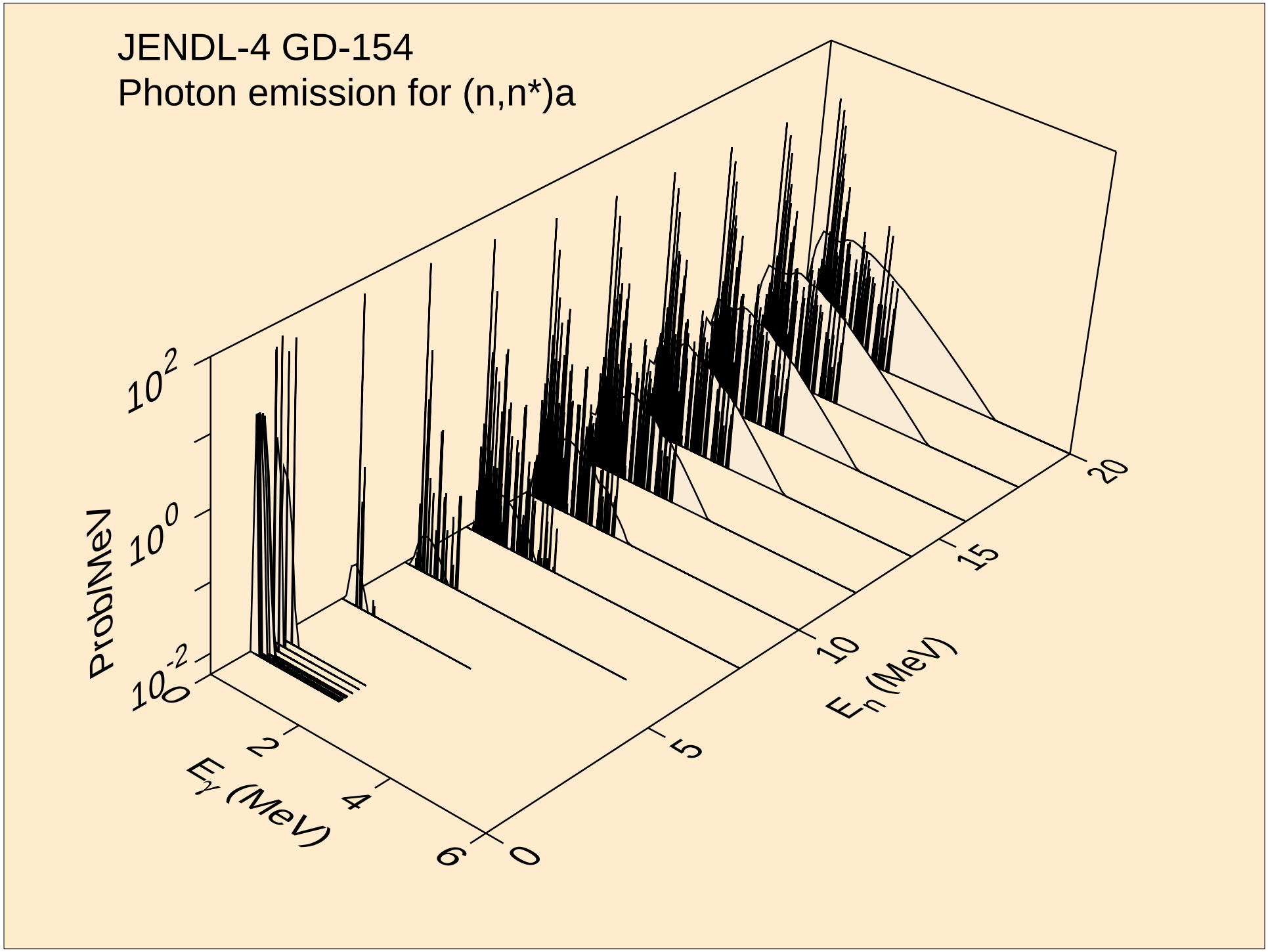
JENDL-4 GD-154
Photon emission for (n,n*)a
Prob/MeV
$10^{2}$
$10^{0}$
$10^{-2}$
$E_\gamma$ (MeV)
0
2
4
6
$E_n$ (MeV)
0
5
10
15
20

JENDL-4 GD-154
Photon emission for (n,2n)a

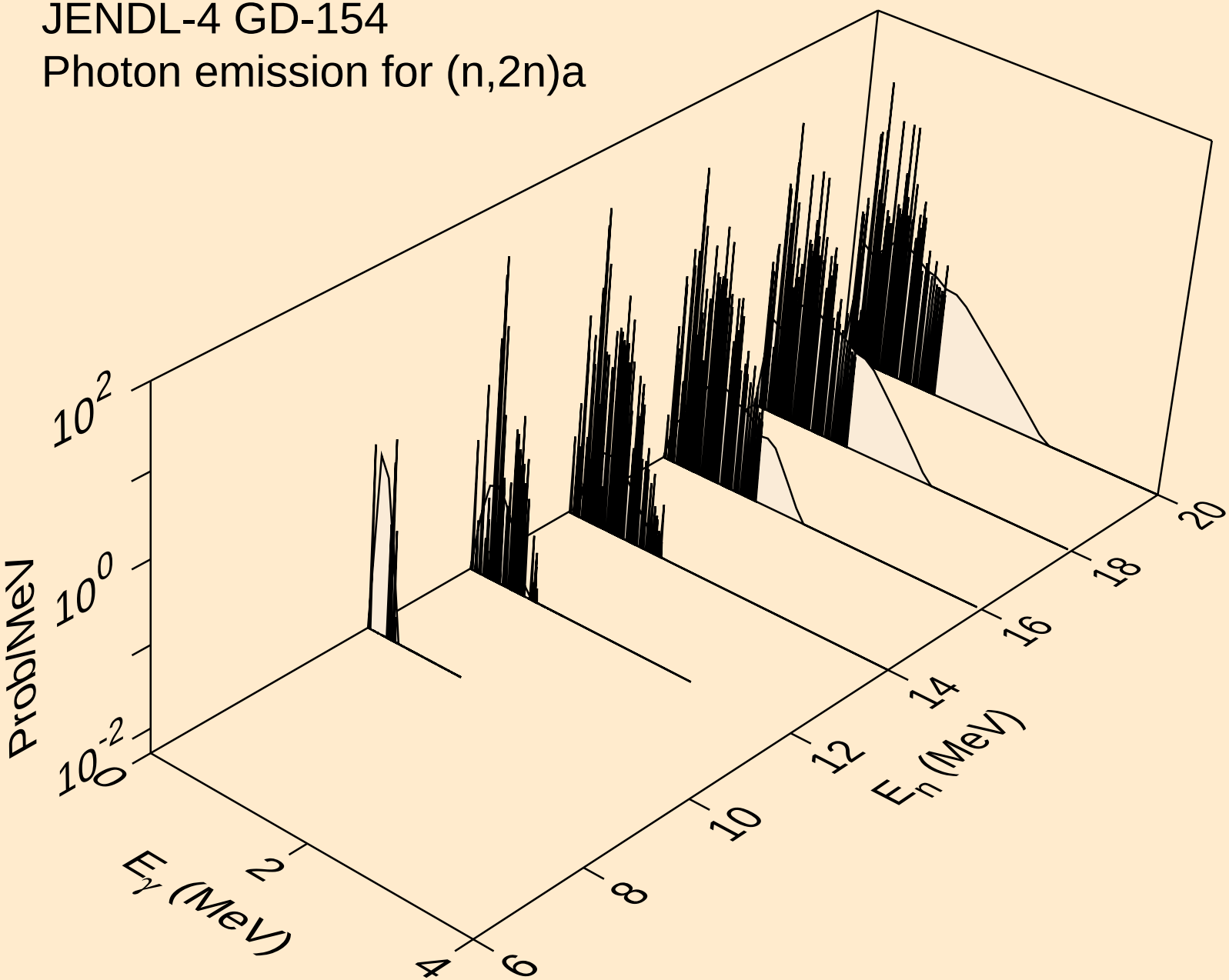

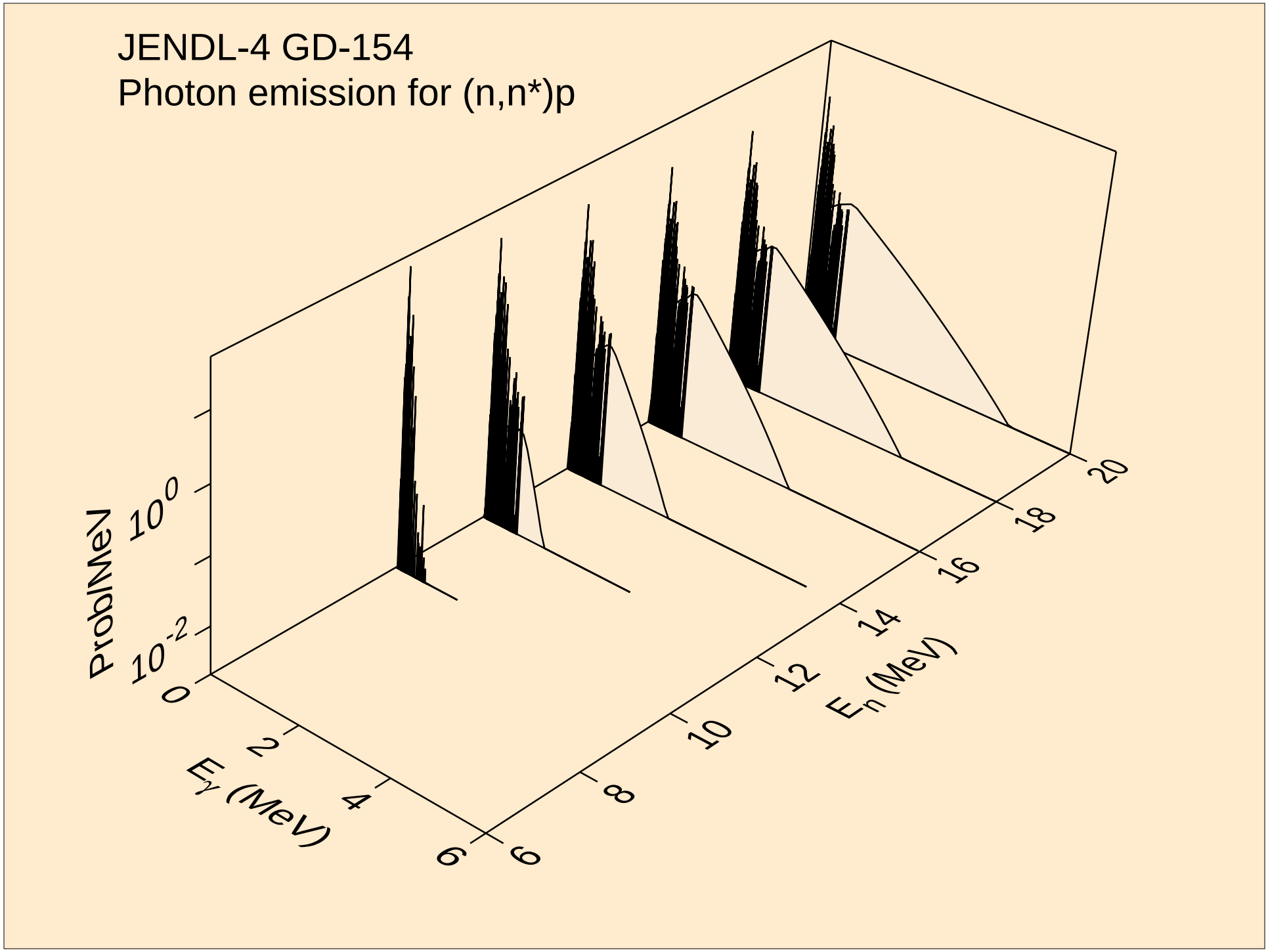
JENDL-4 GD-154
Photon emission for (n,n*)p
Prob/MeV
$10^0$
$10^{-2}$
0
2
4
6
$E_\gamma$ (MeV)
6
8
10
12
14
16
18
20
$E_n$ (MeV)

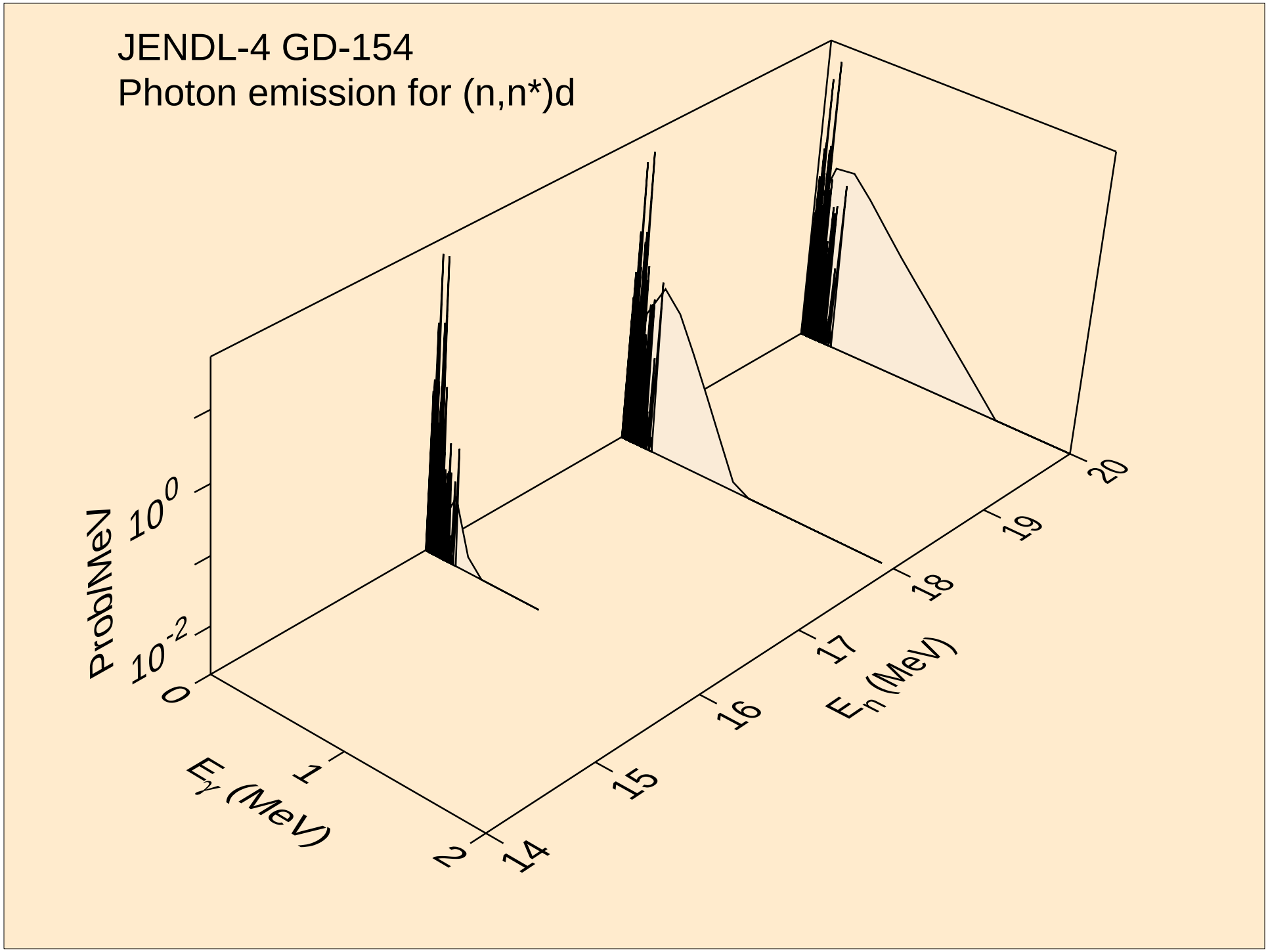
JENDL-4 GD-154
Photon emission for (n,n*)d
Prob/MeV
$10^0$
$10^{-2}$
0
1
2
$E_\gamma$ (MeV)
14
15
16
17
18
19
20
$E_n$ (MeV)

JENDL-4 GD-154
Photon emission for (n,n*1)

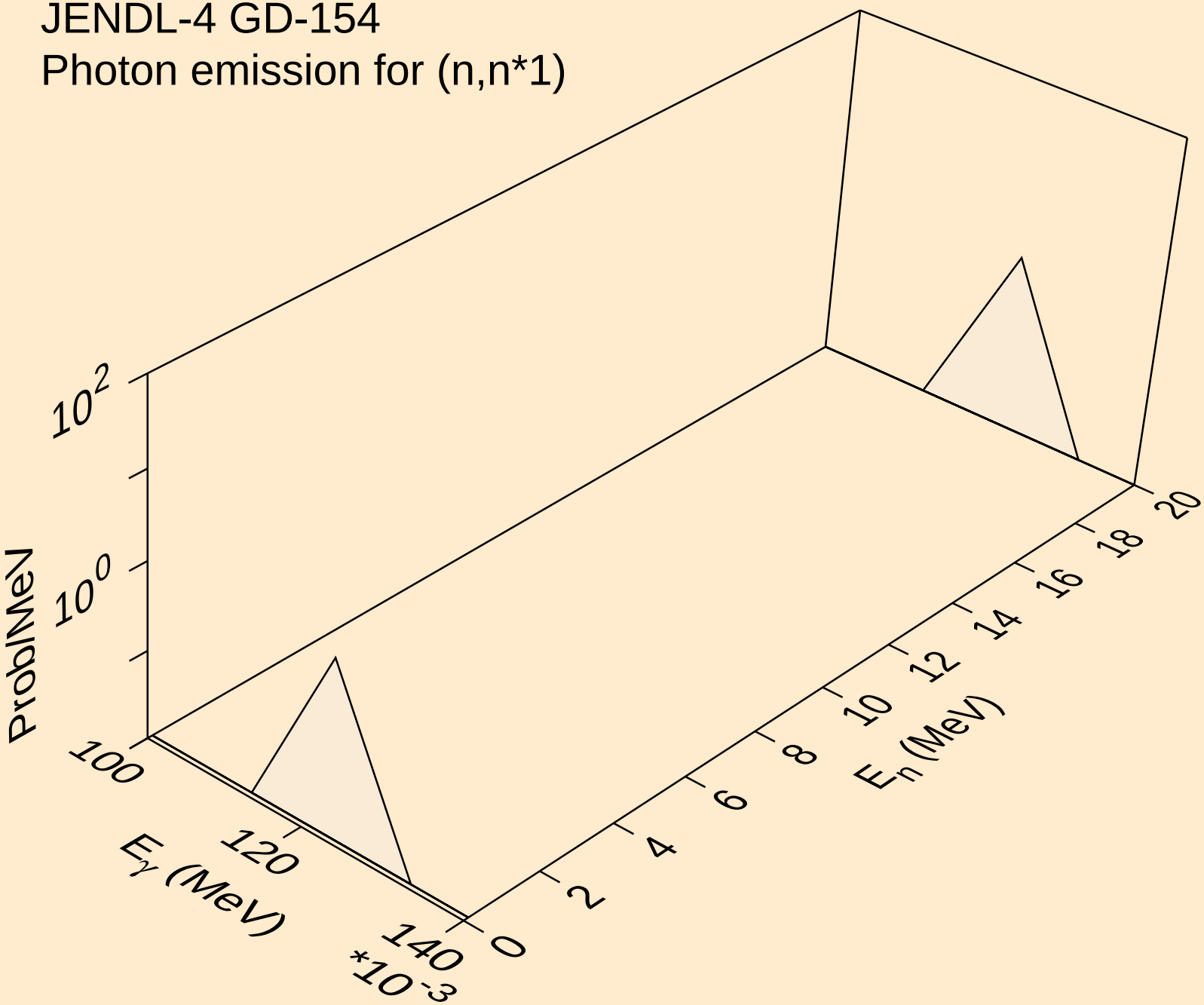

JENDL-4 GD-154
Photon emission for (n,n*2)

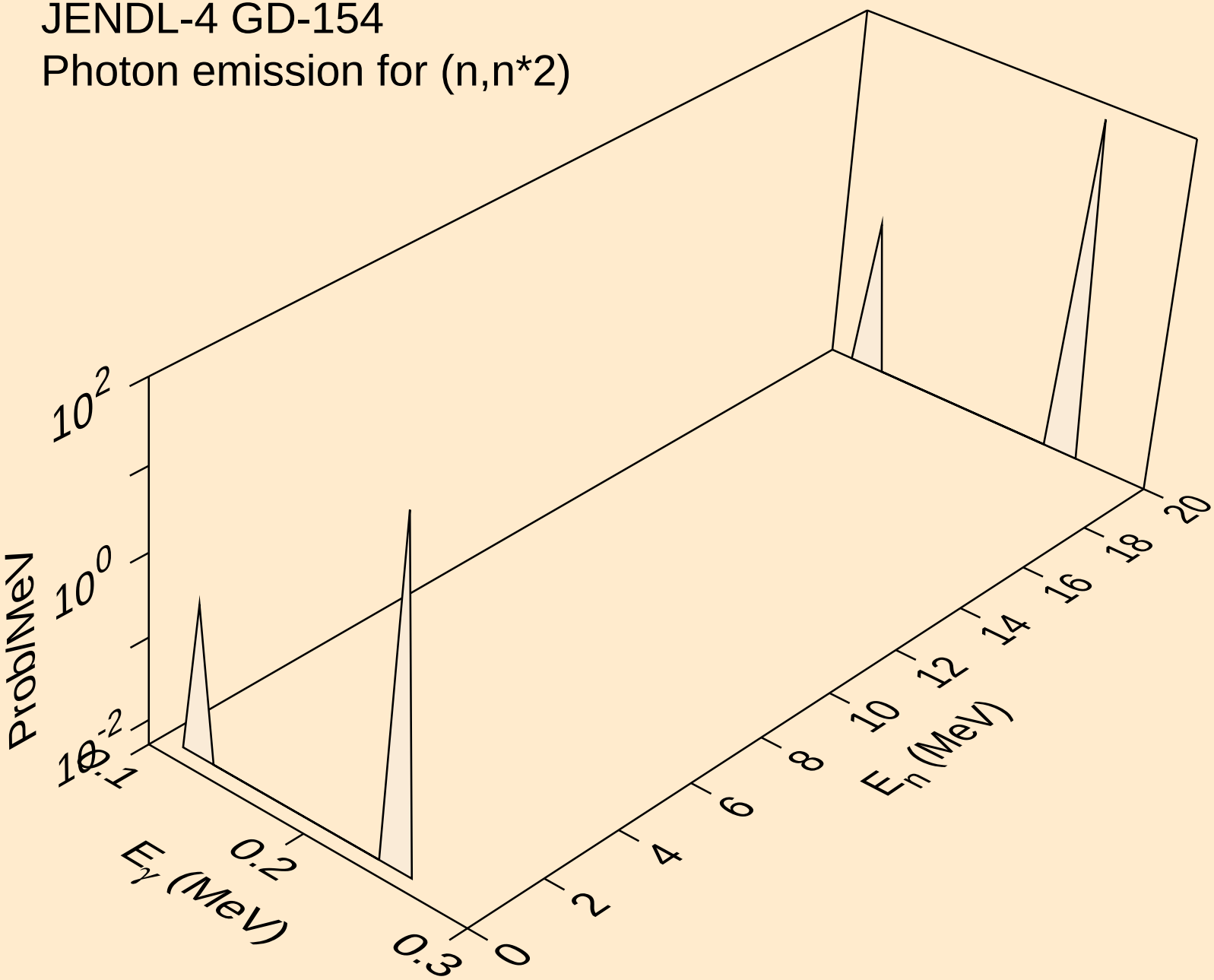

JENDL-4 GD-154
Photon emission for (n,n*3)

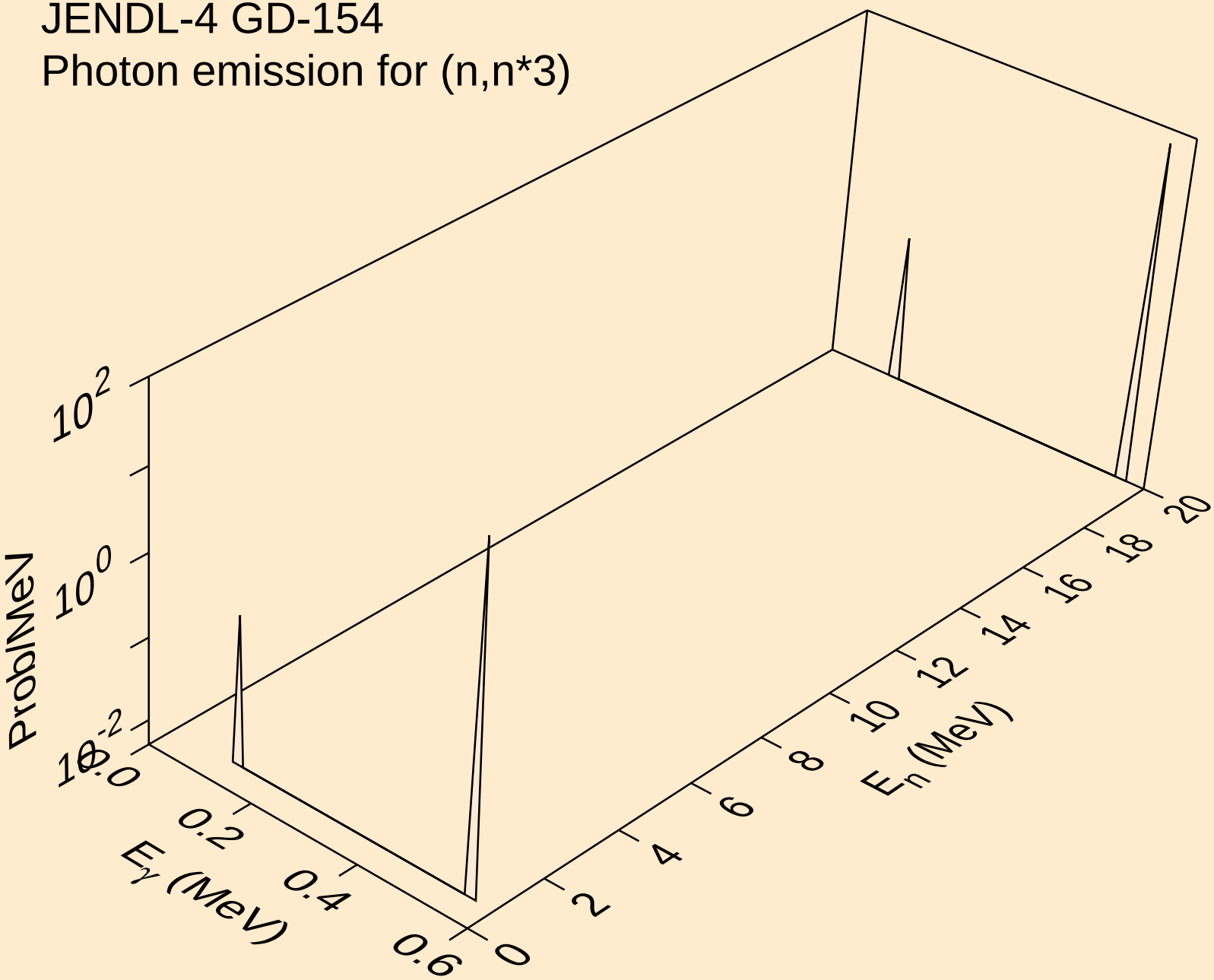

JENDL-4 GD-154
Photon emission for (n,n*4)

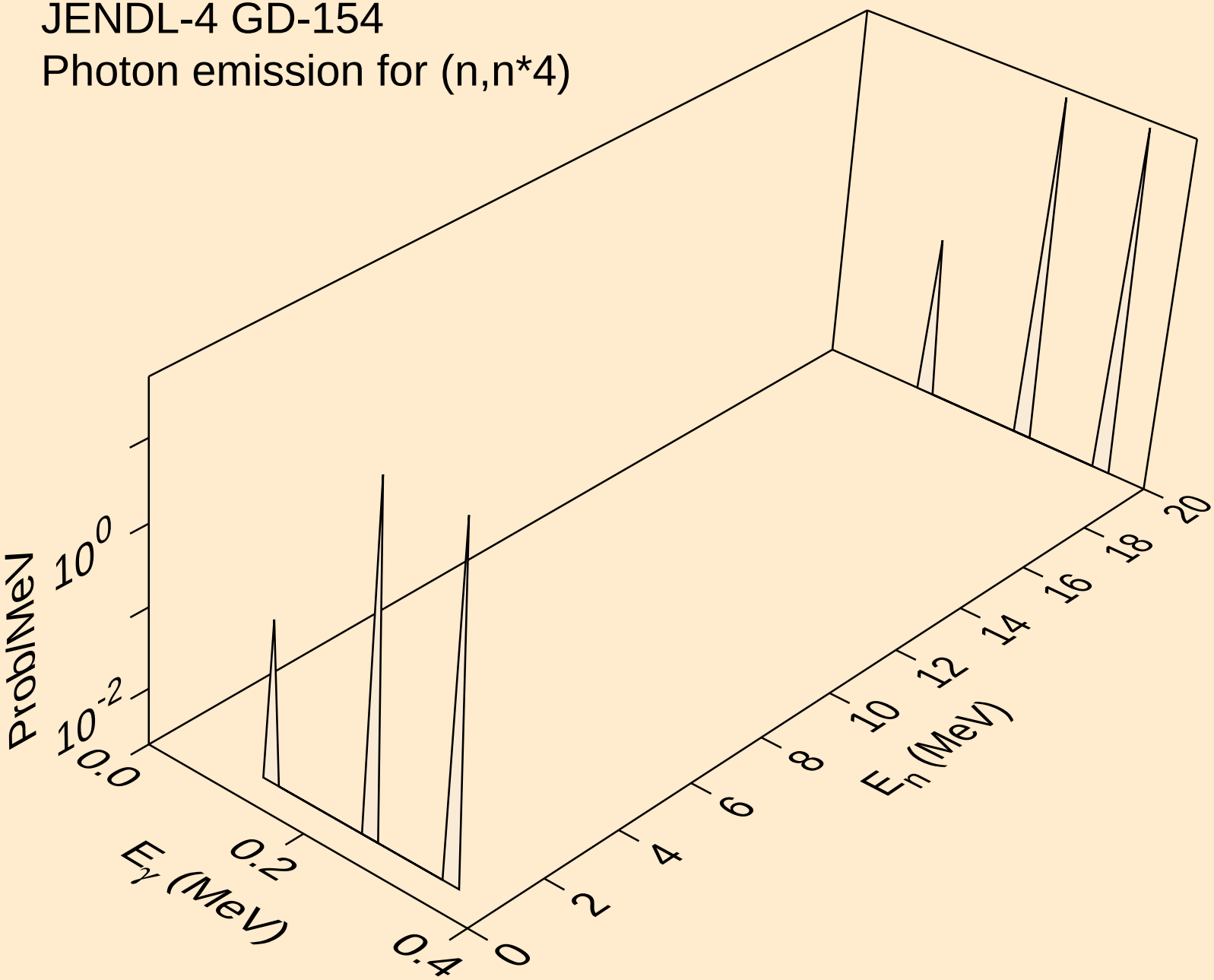

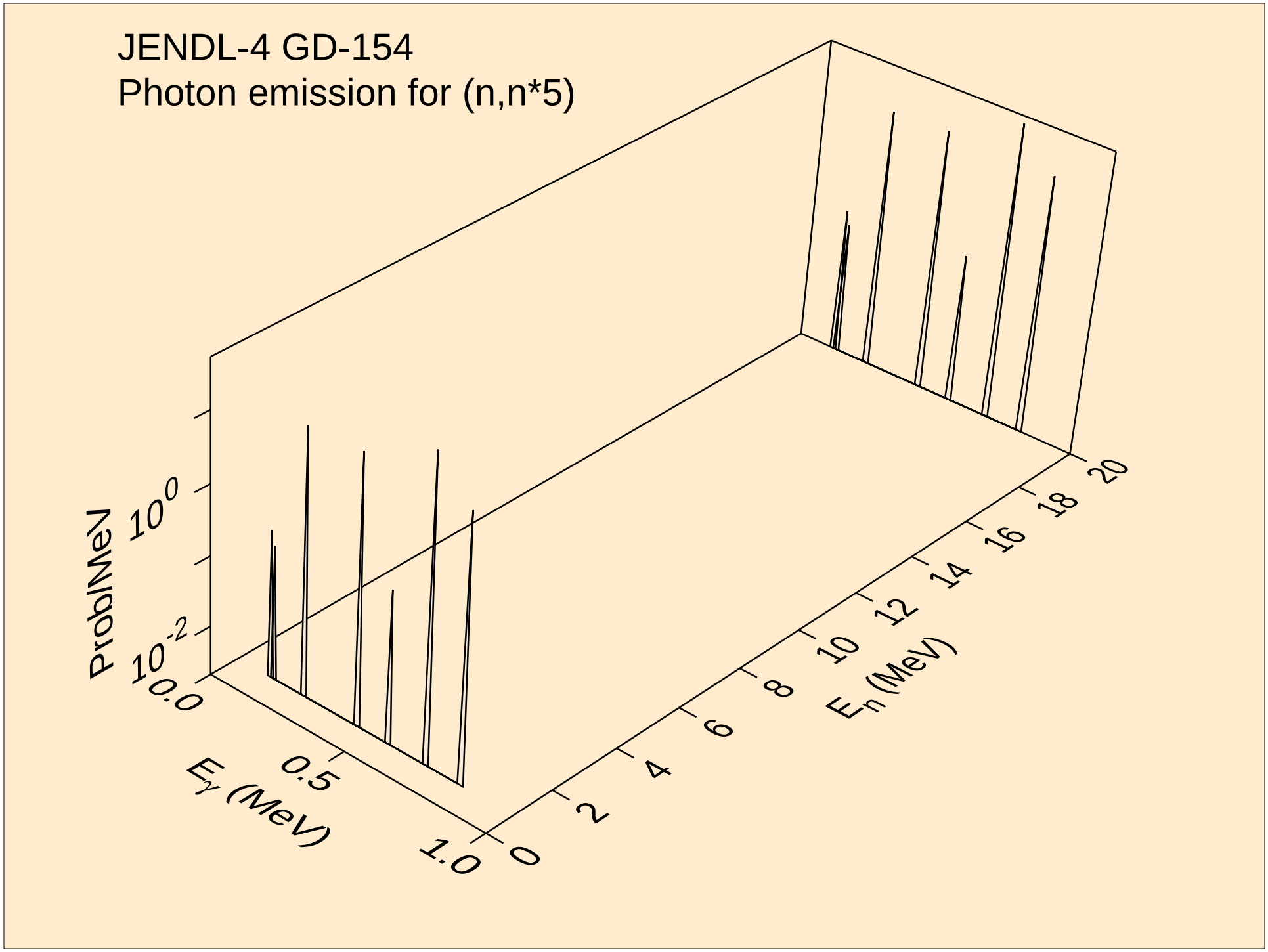
JENDL-4 GD-154
Photon emission for (n,n*5)
Prob/MeV
$10^0$
$10^{-2}$
0.0
0.5
1.0
$E_\gamma$ (MeV)
0
2
4
6
8
10
12
14
16
18
20
$E_n$ (MeV)

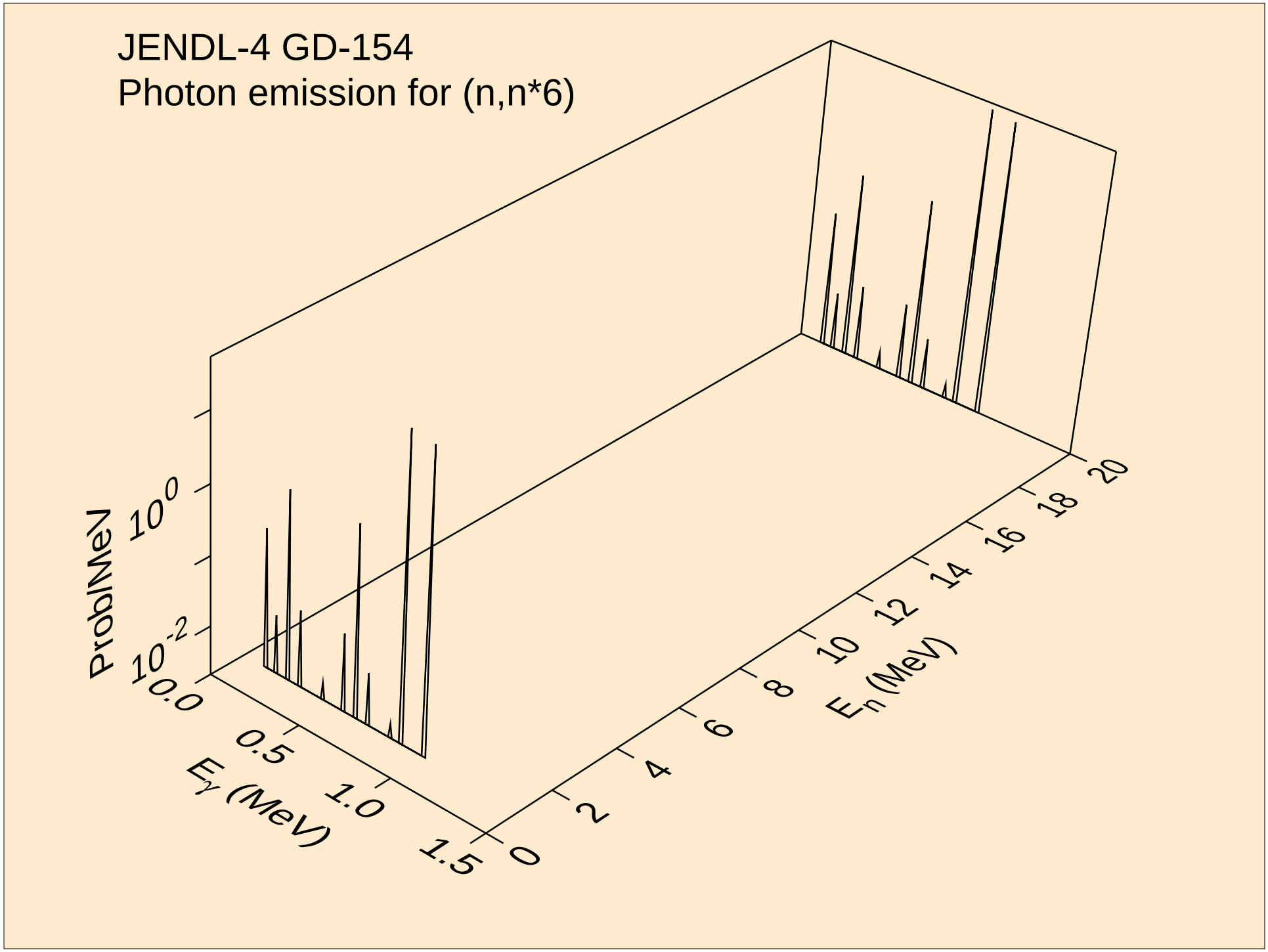
JENDL-4 GD-154
Photon emission for (n,n*6)
Prob/MeV
$10^0$
$10^{-2}$
0.0
0.5
1.0
1.5
$E_\gamma$ (MeV)
0
2
4
6
8
10
12
14
16
18
20
$E_n$ (MeV)

JENDL-4 GD-154
Photon emission for (n,n*7)

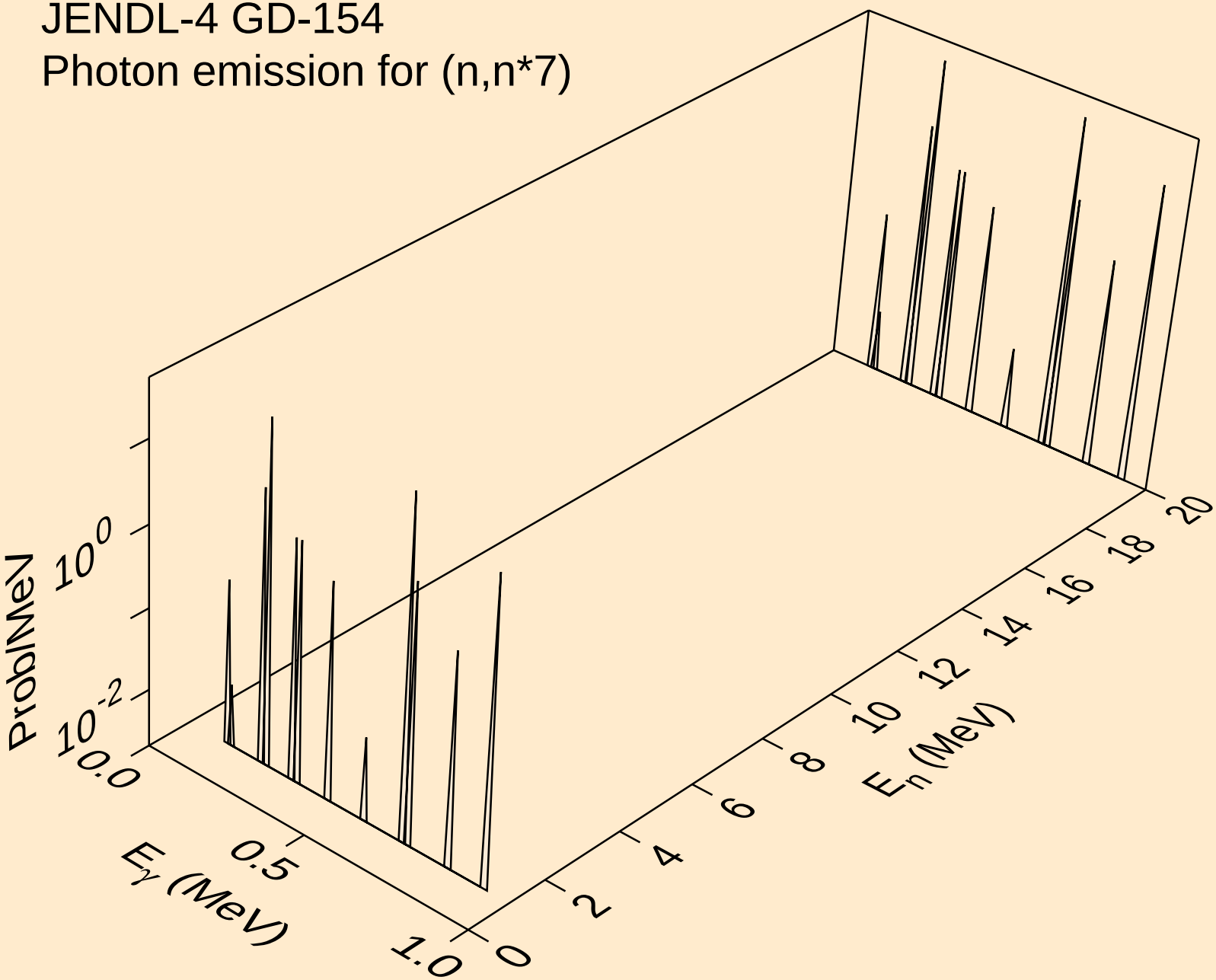

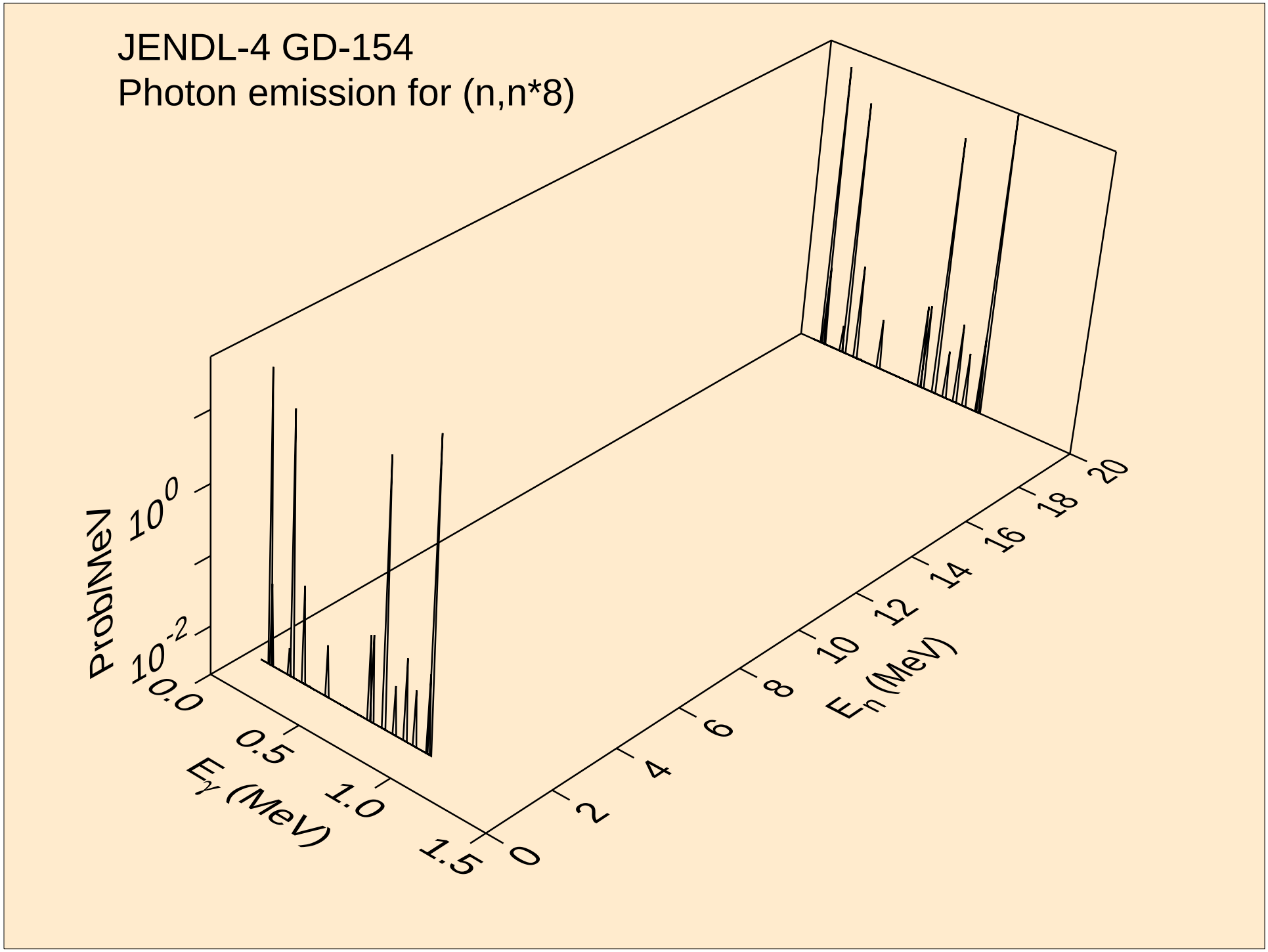
JENDL-4 GD-154
Photon emission for (n,n*8)
Prob/MeV
$10^0$
$10^{-2}$
0.0
0.5
1.0
1.5
$E_\gamma$ (MeV)
0
2
4
6
8
10
12
14
16
18
20
$E_n$ (MeV)

JENDL-4 GD-154
Photon emission for (n,n*9)

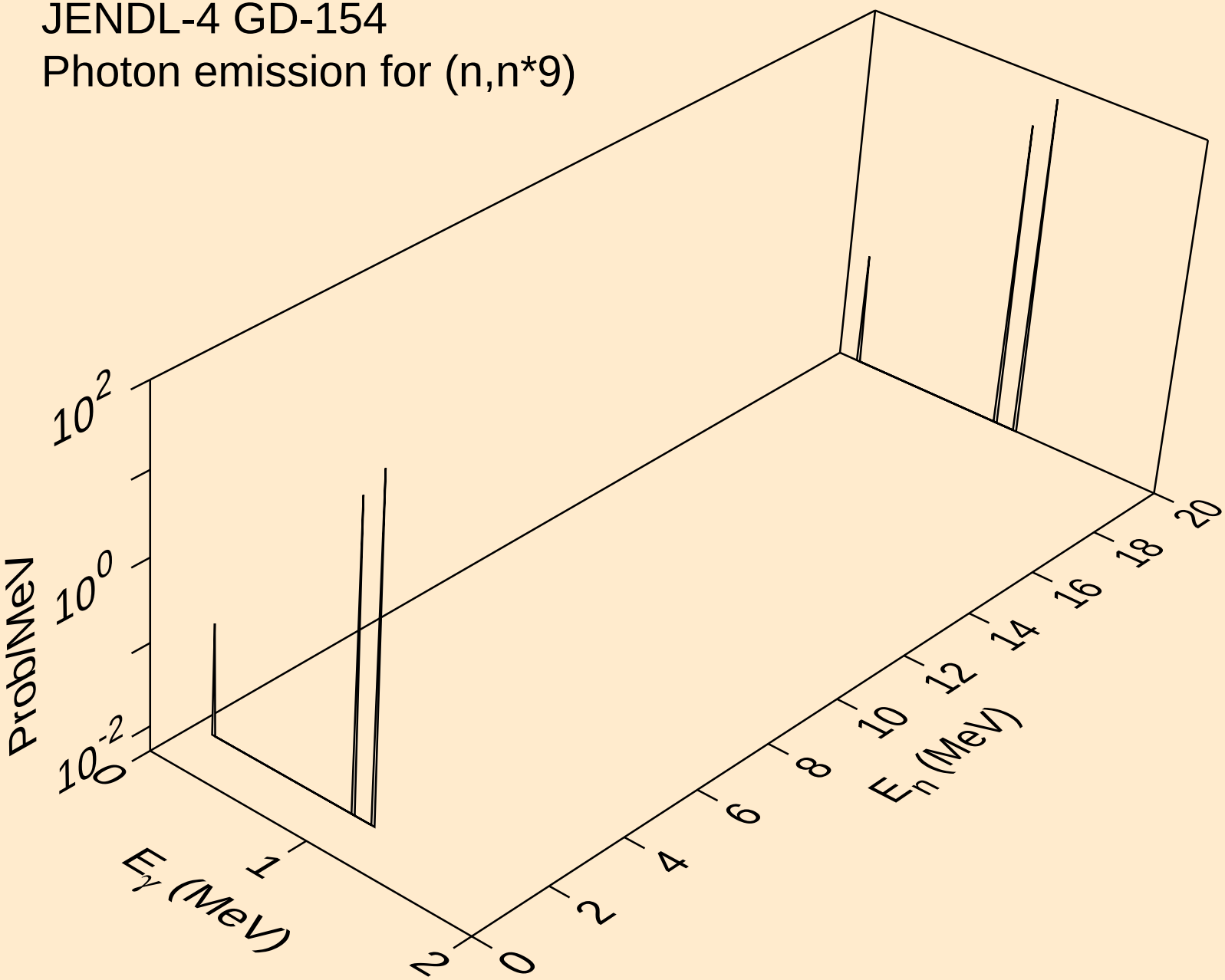

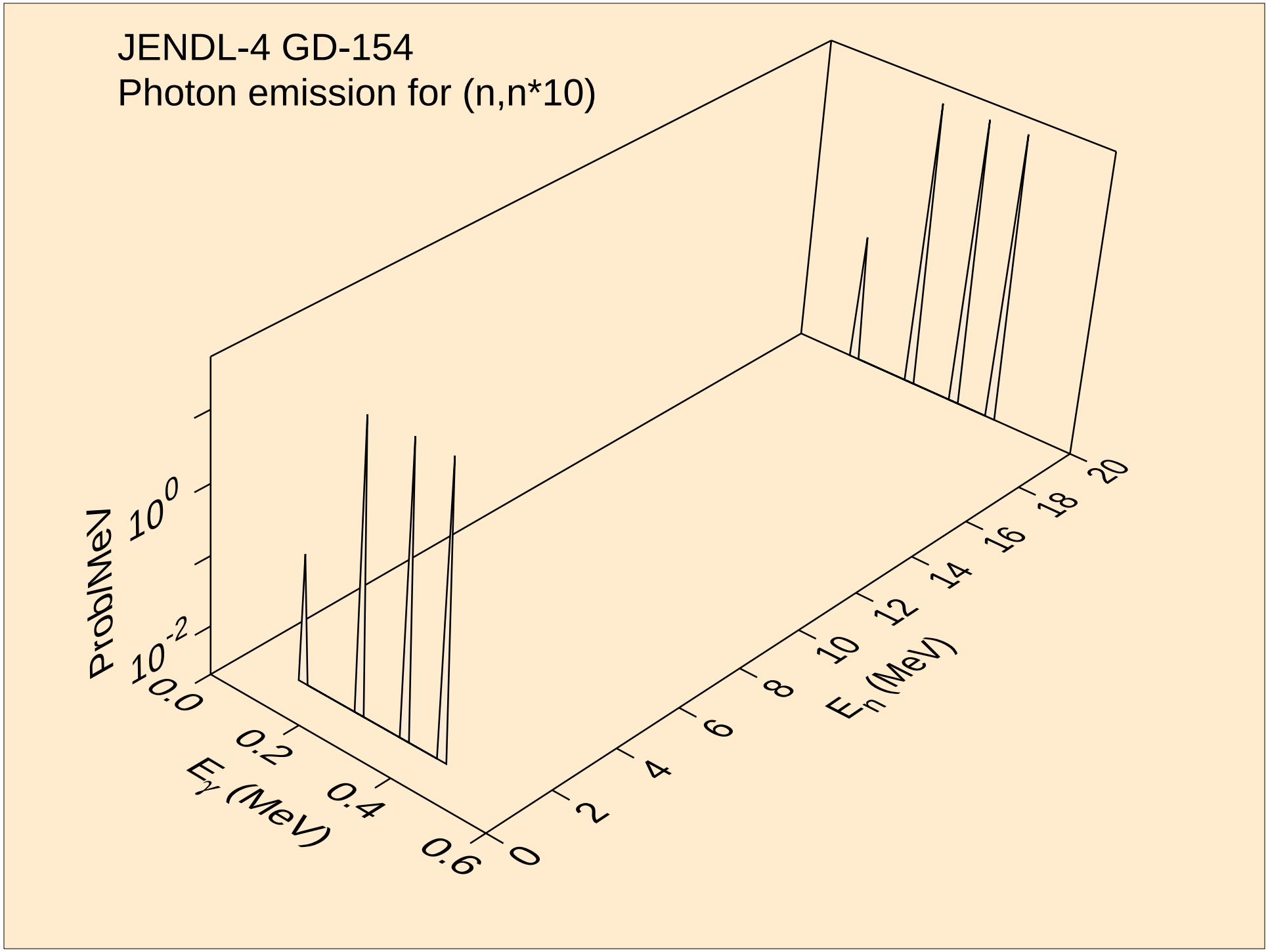
JENDL-4 GD-154
Photon emission for (n,n*10)
Prob/MeV
$10^{0}$
$10^{-2}$
0.0
0.2
0.4
0.6
$E_\gamma$ (MeV)
0
2
4
6
8
10
12
14
16
18
20
$E_n$ (MeV)

JENDL-4 GD-154
Photon emission for (n,n*11)

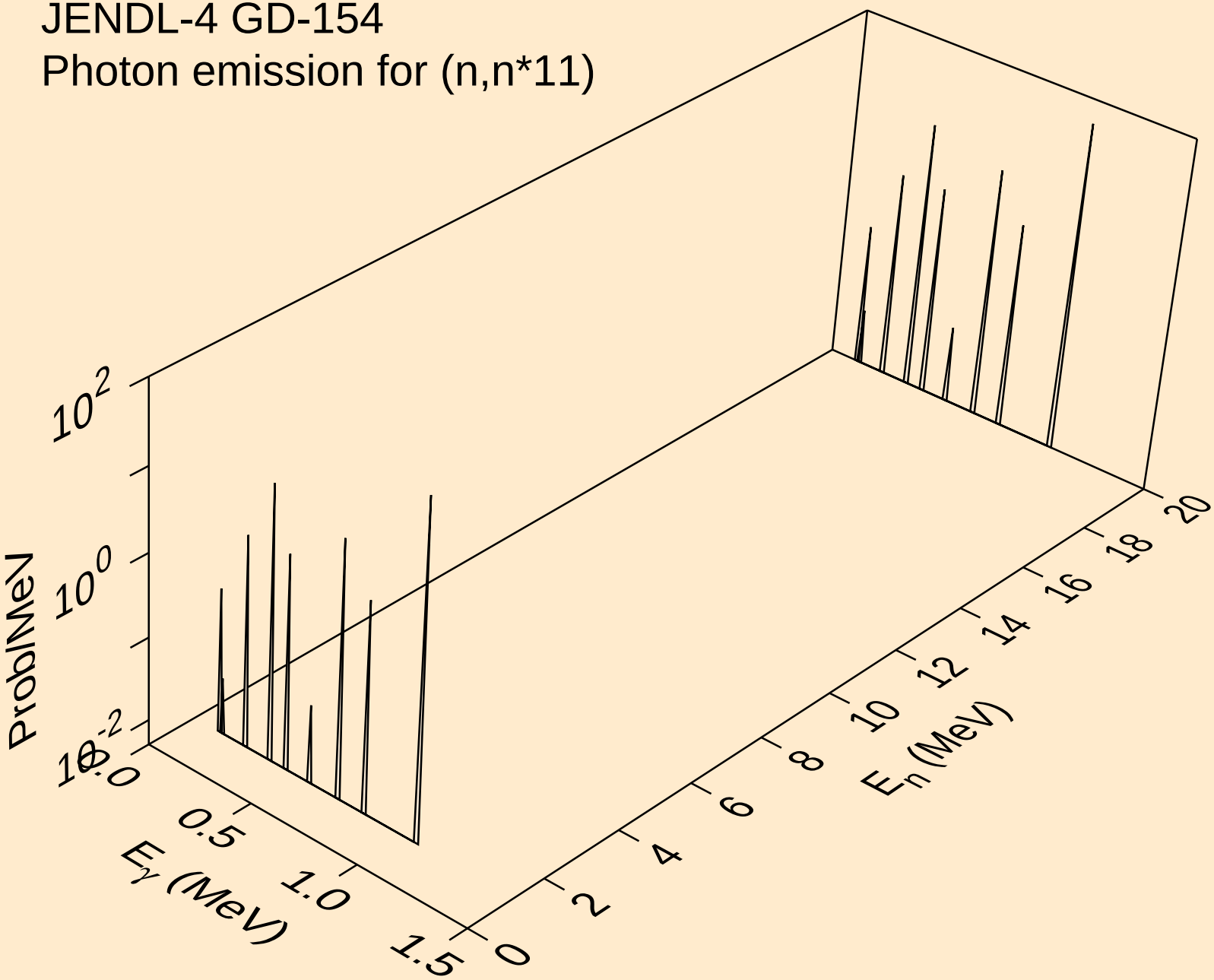

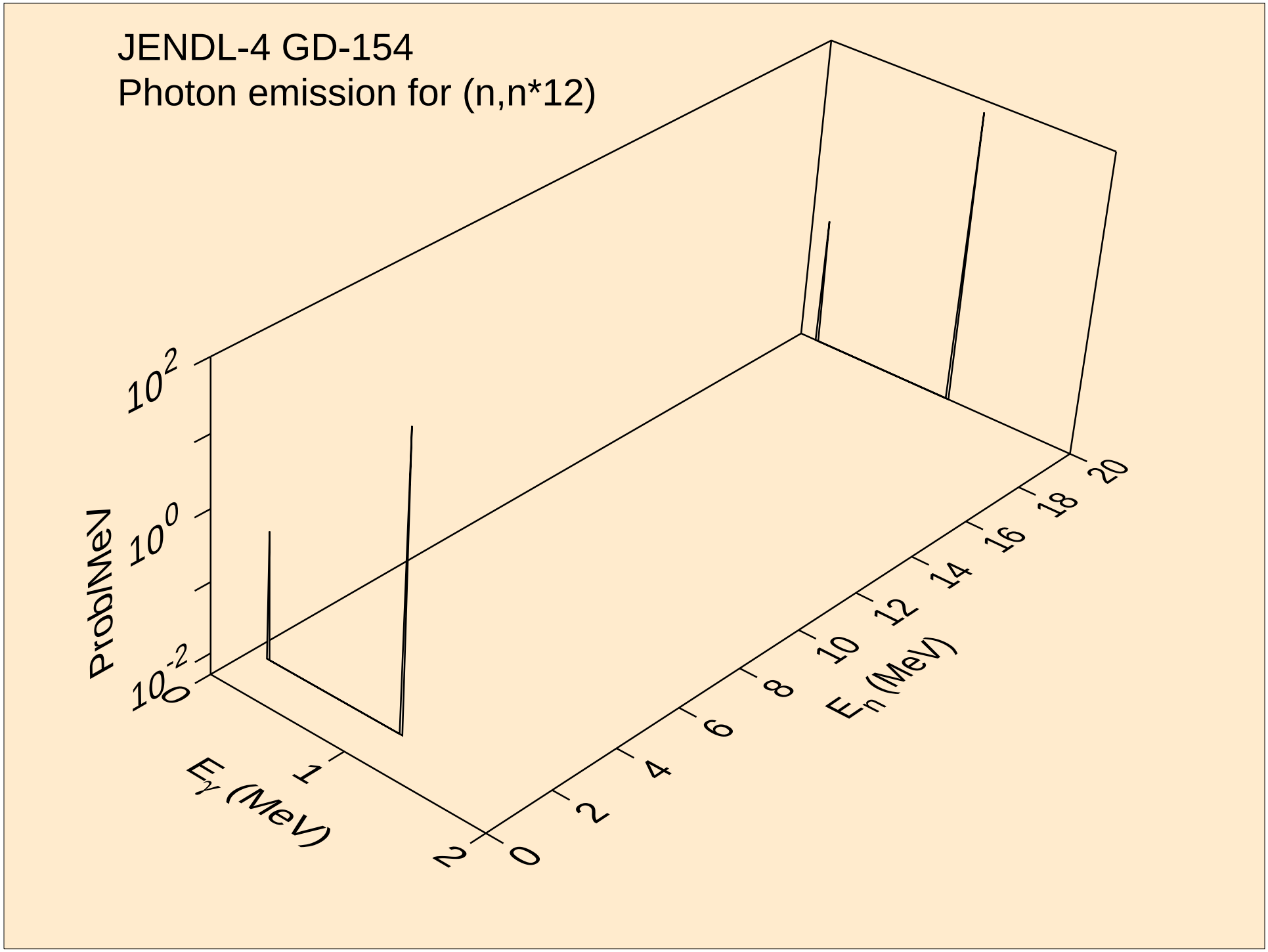
JENDL-4 GD-154
Photon emission for (n,n*12)
Prob/MeV
$10^{2}$
$10^{0}$
$10^{-2}$
$E_\gamma$ (MeV)
0
1
2
$E_n$ (MeV)
0
2
4
6
8
10
12
14
16
18
20

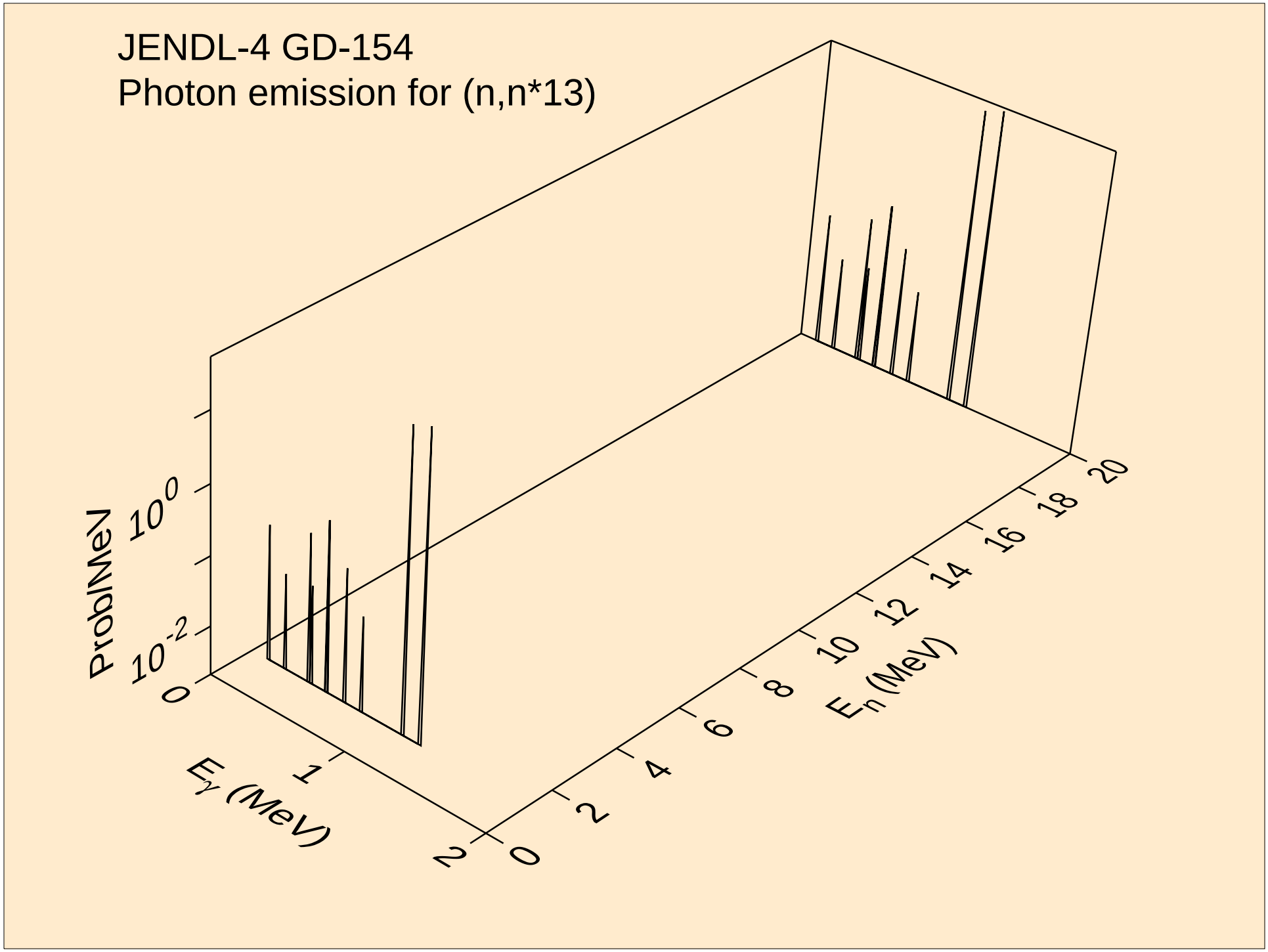
JENDL-4 GD-154
Photon emission for (n,n*13)
Prob/MeV
$10^0$
$10^{-2}$
0
1
2
$E_\gamma$ (MeV)
0
2
4
6
8
10
12
14
16
18
20
$E_n$ (MeV)

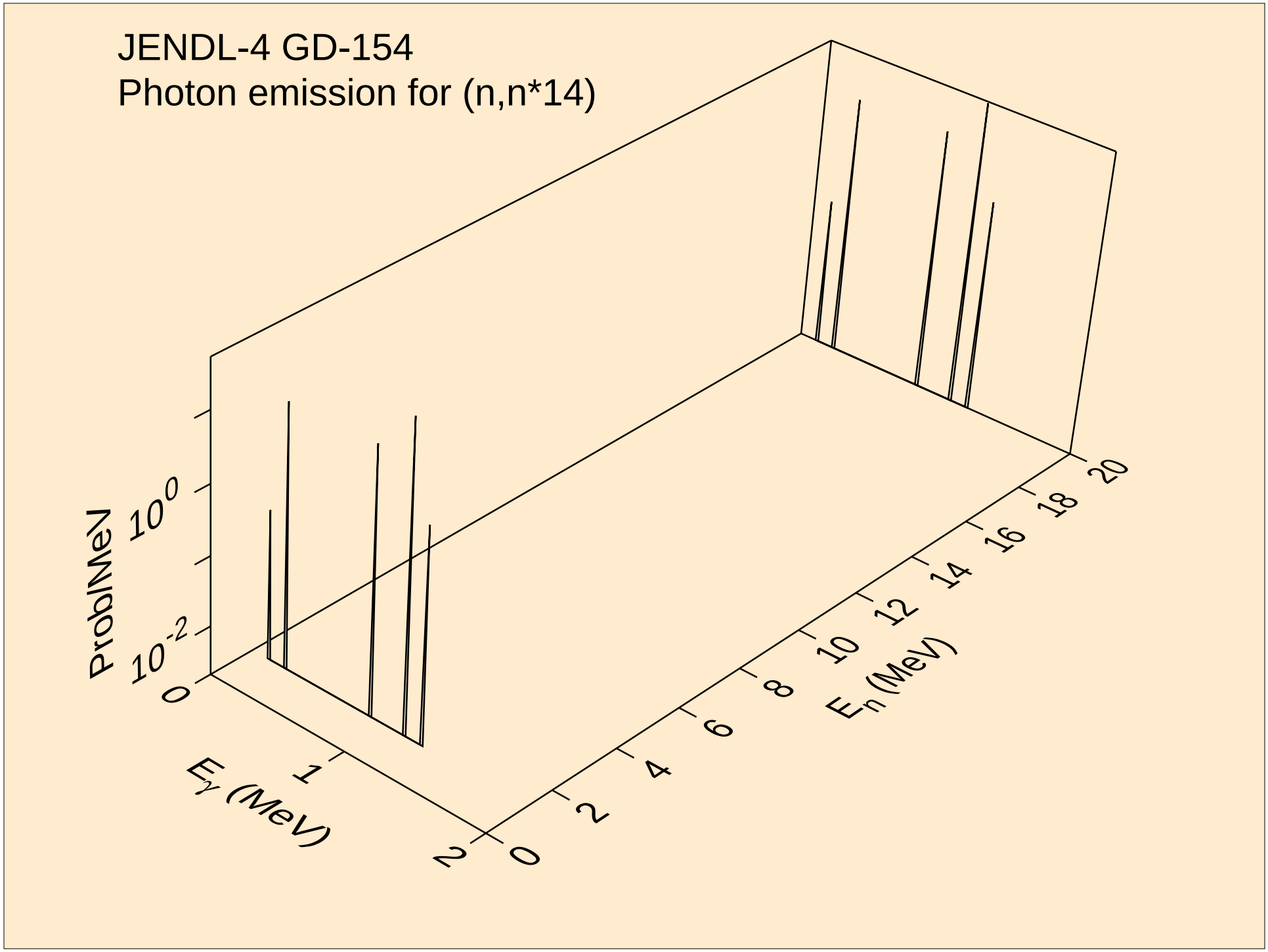
JENDL-4 GD-154
Photon emission for (n,n*14)
Prob/MeV
$10^0$
$10^{-2}$
0
1
2
$E_\gamma$ (MeV)
0
2
4
6
8
10
12
14
16
18
20
$E_n$ (MeV)

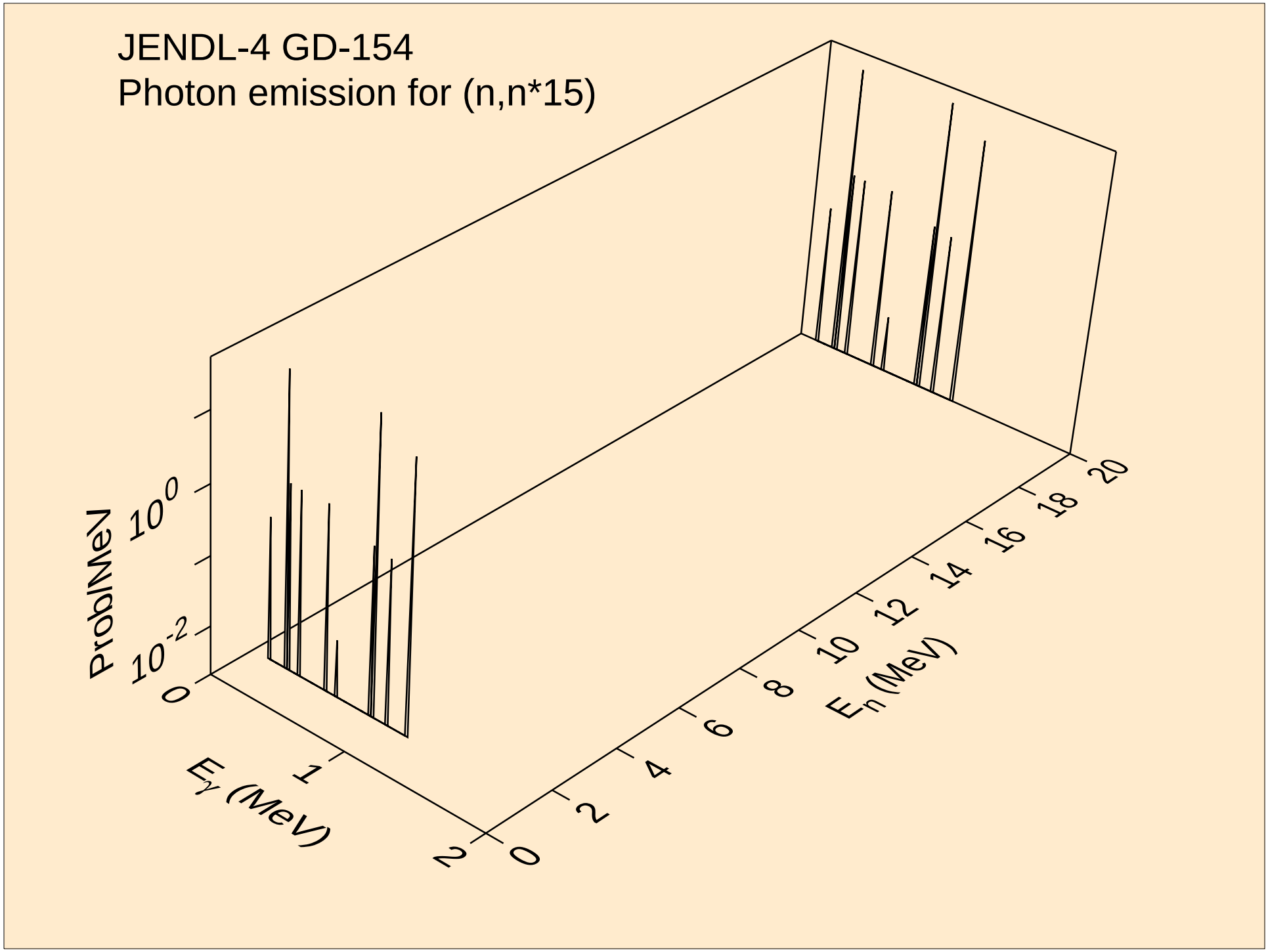
JENDL-4 GD-154
Photon emission for (n,n*15)
Prob/MeV
$10^0$
$10^{-2}$
0
1
2
$E_\gamma$ (MeV)
0
2
4
6
8
10
12
14
16
18
20
$E_n$ (MeV)

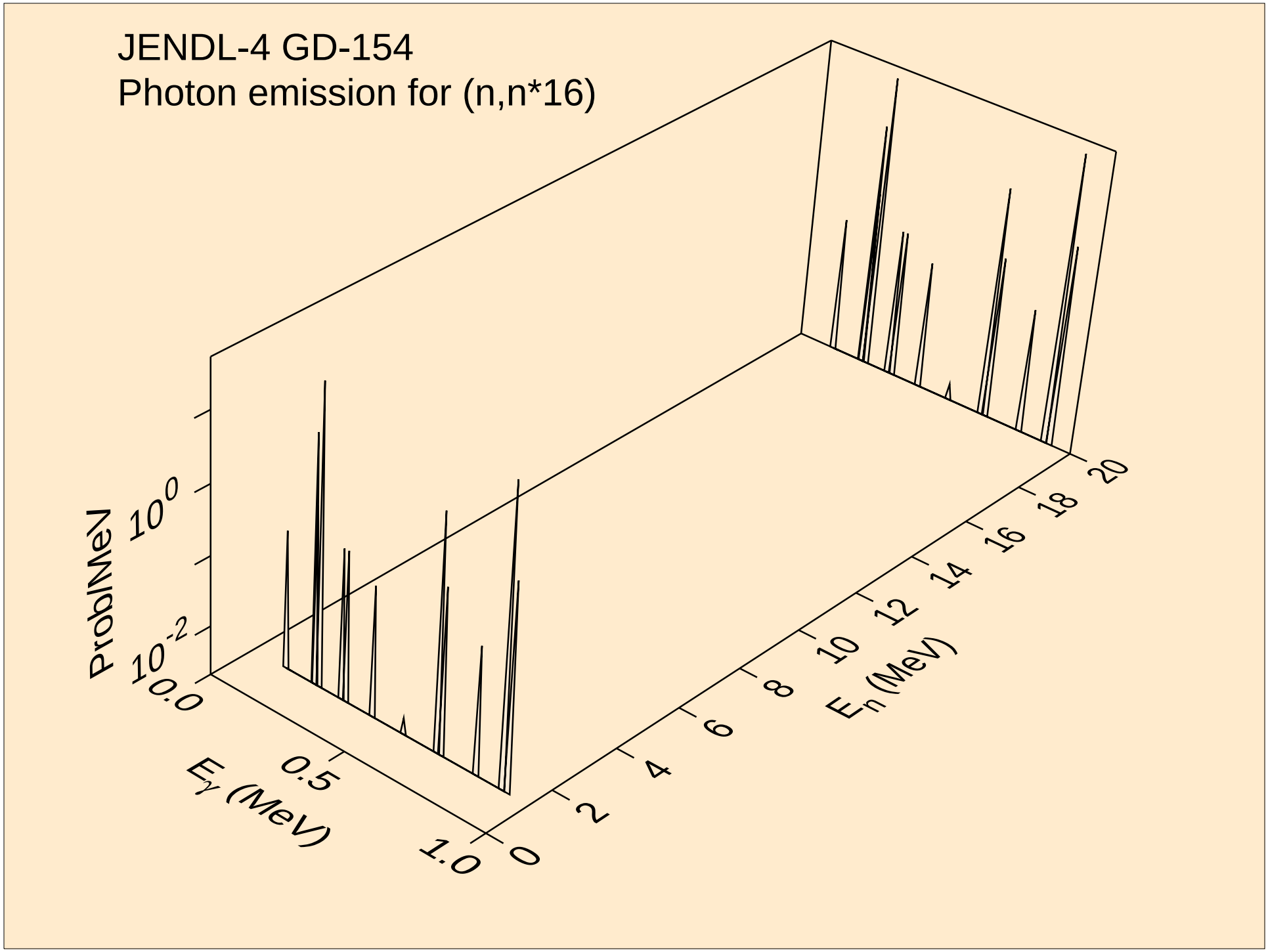
JENDL-4 GD-154
Photon emission for (n,n*16)
Prob/MeV
$10^0$
$10^{-2}$
0.0
0.5
1.0
$E_\gamma$ (MeV)
0
2
4
6
8
10
12
14
16
18
20
$E_n$ (MeV)

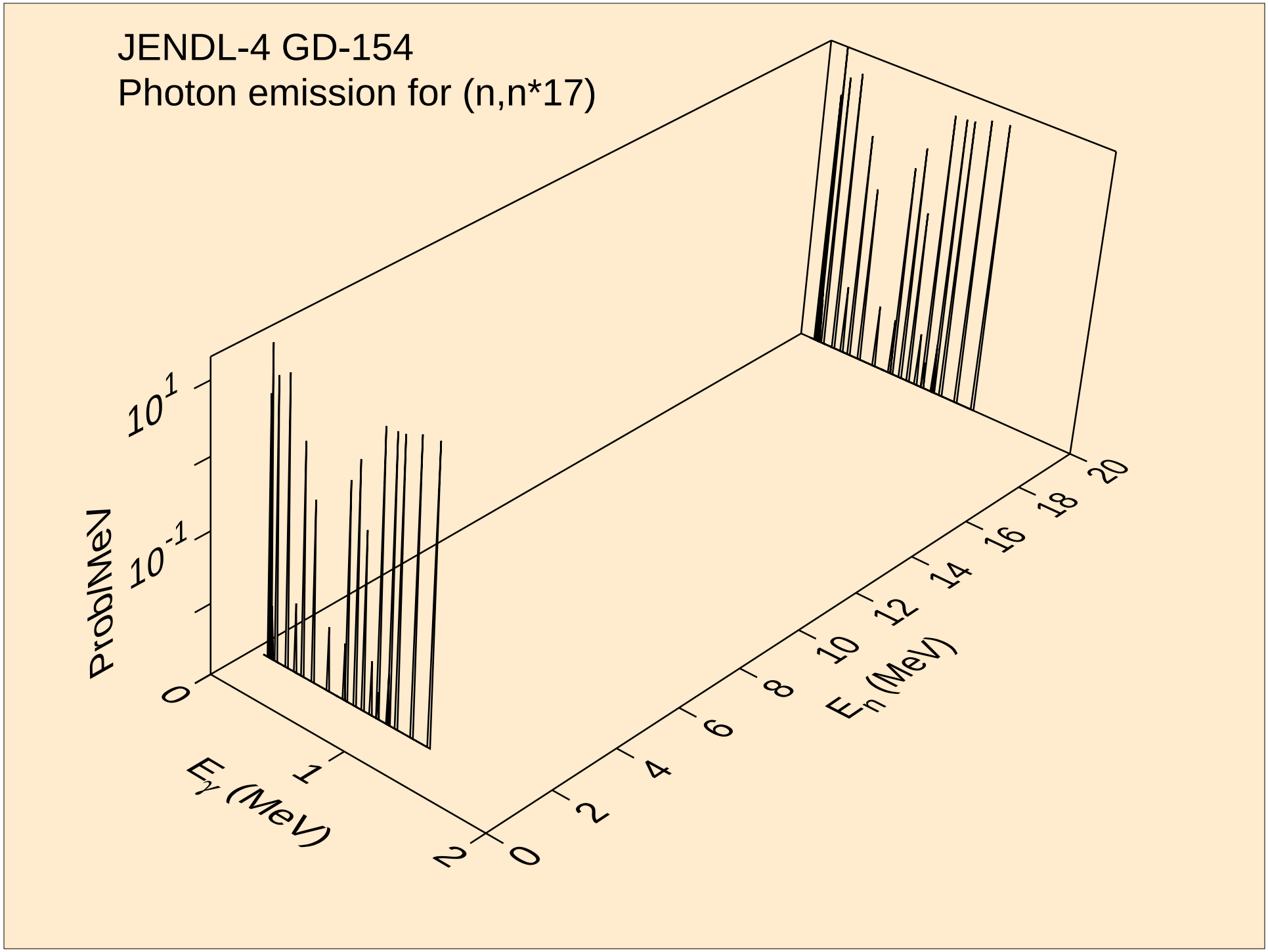
JENDL-4 GD-154
Photon emission for (n,n*17)
Prob/MeV
$10^{1}$
$10^{-1}$
0
1
2
$E_\gamma$ (MeV)
0
2
4
6
8
10
12
14
16
18
20
$E_n$ (MeV)

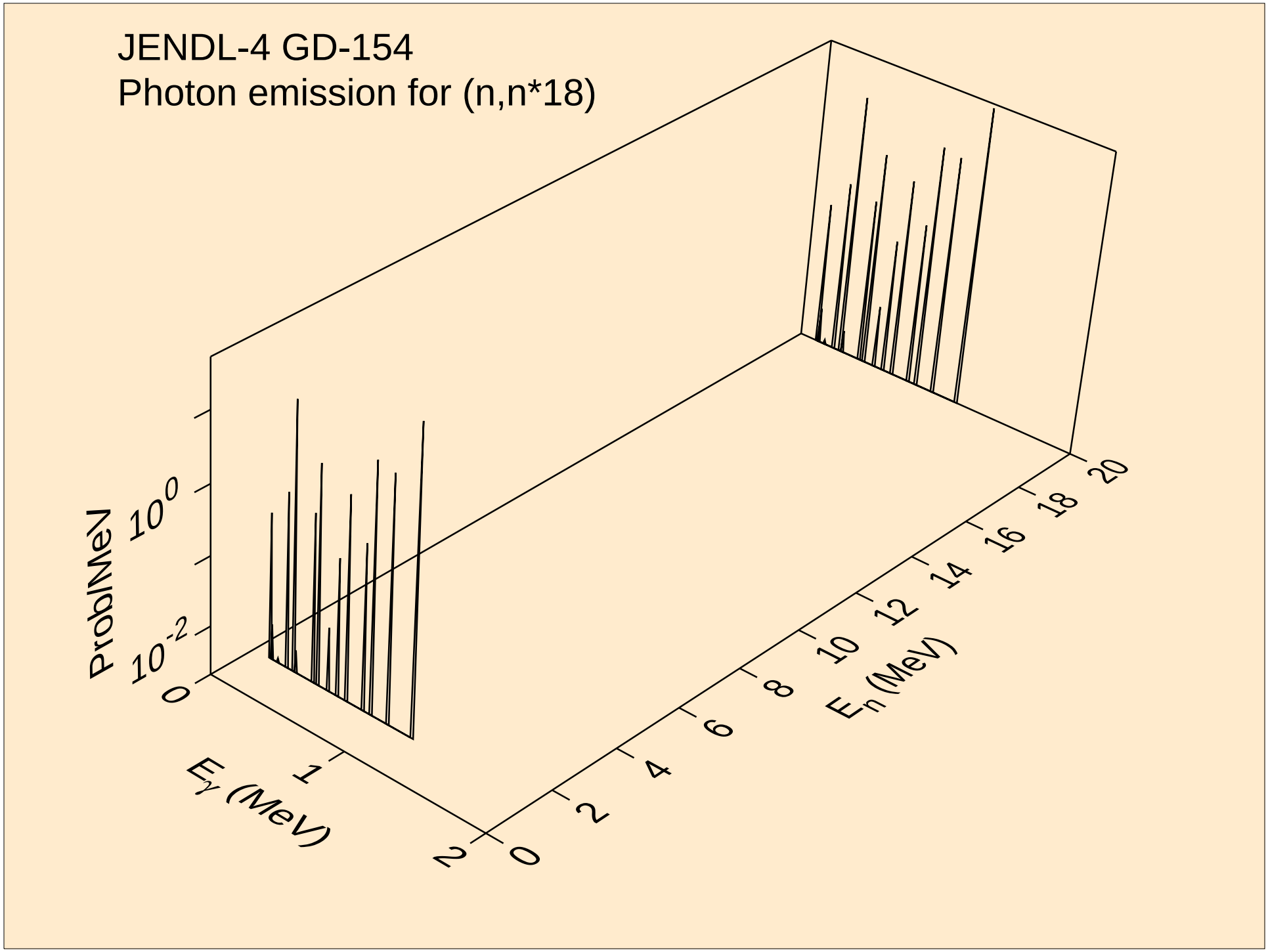
JENDL-4 GD-154
Photon emission for (n,n*18)
Prob/MeV
$10^0$
$10^{-2}$
0
1
2
$E_\gamma$ (MeV)
0
2
4
6
8
10
12
14
16
18
20
$E_n$ (MeV)

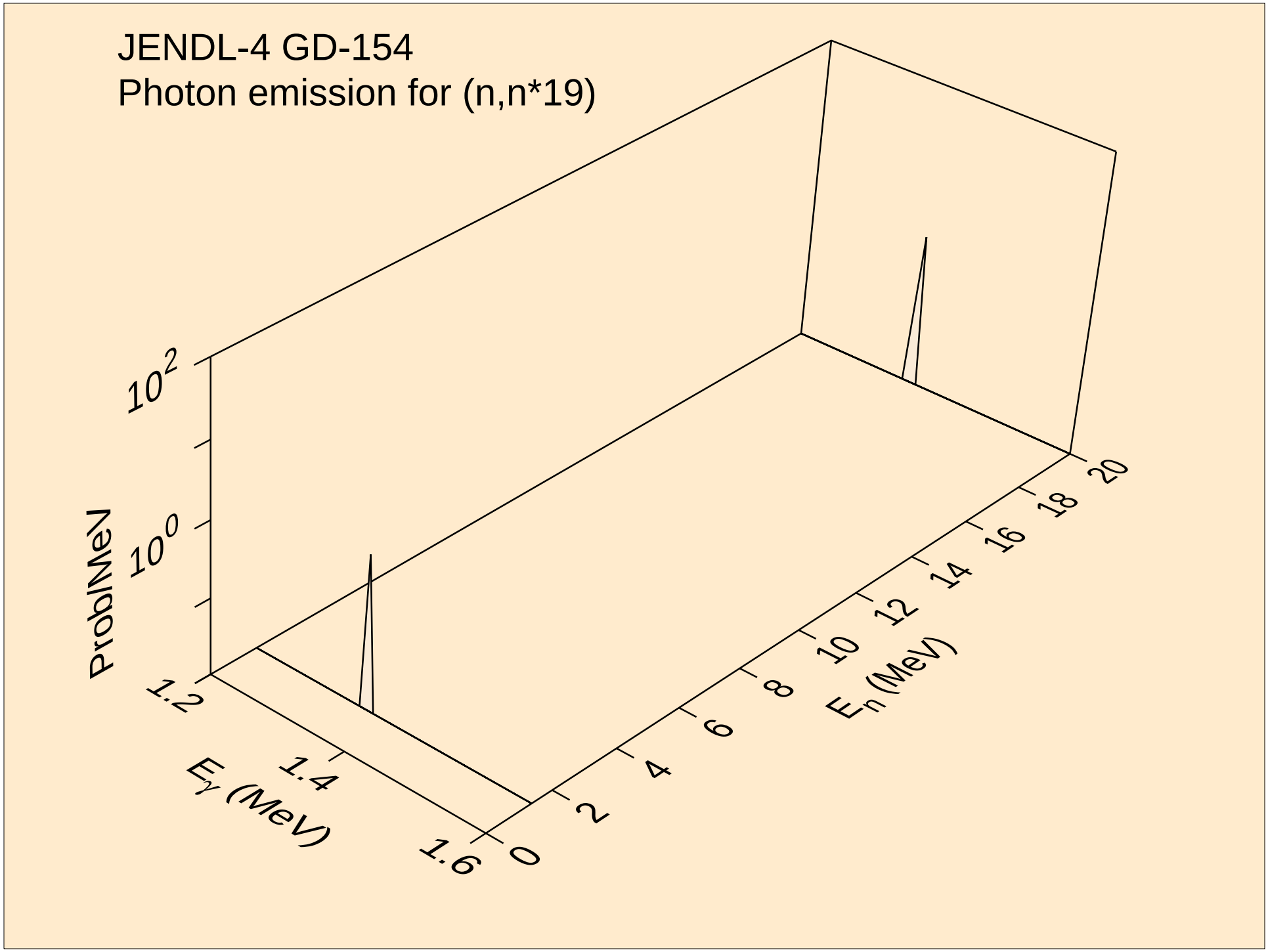
JENDL-4 GD-154
Photon emission for (n,n*19)
Prob/MeV
$10^2$
$10^0$
1.2
1.4
1.6
$E_\gamma$ (MeV)
0
2
4
6
8
10
12
14
16
18
20
$E_n$ (MeV)

JENDL-4 GD-154
Photon emission for (n,n*20)

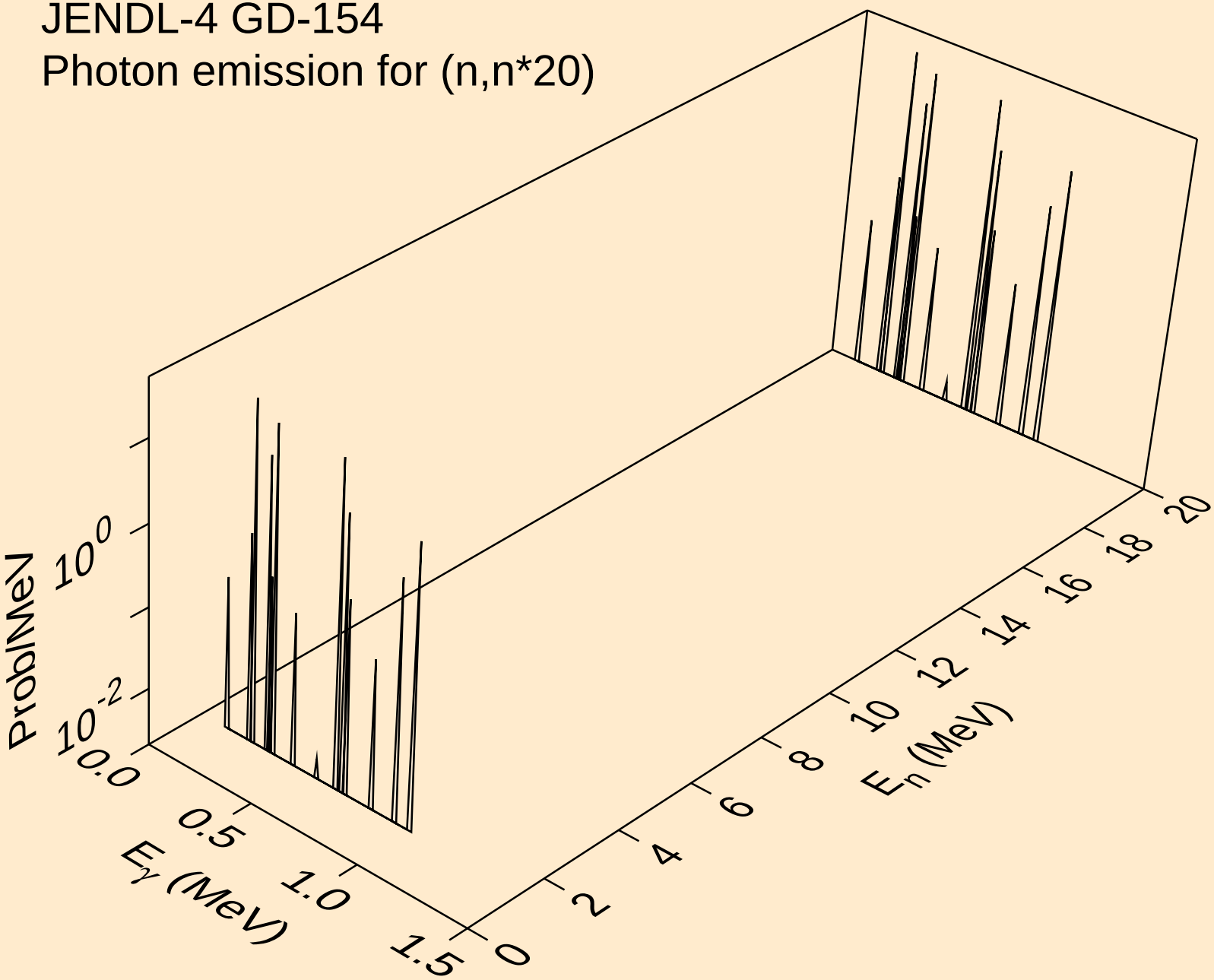

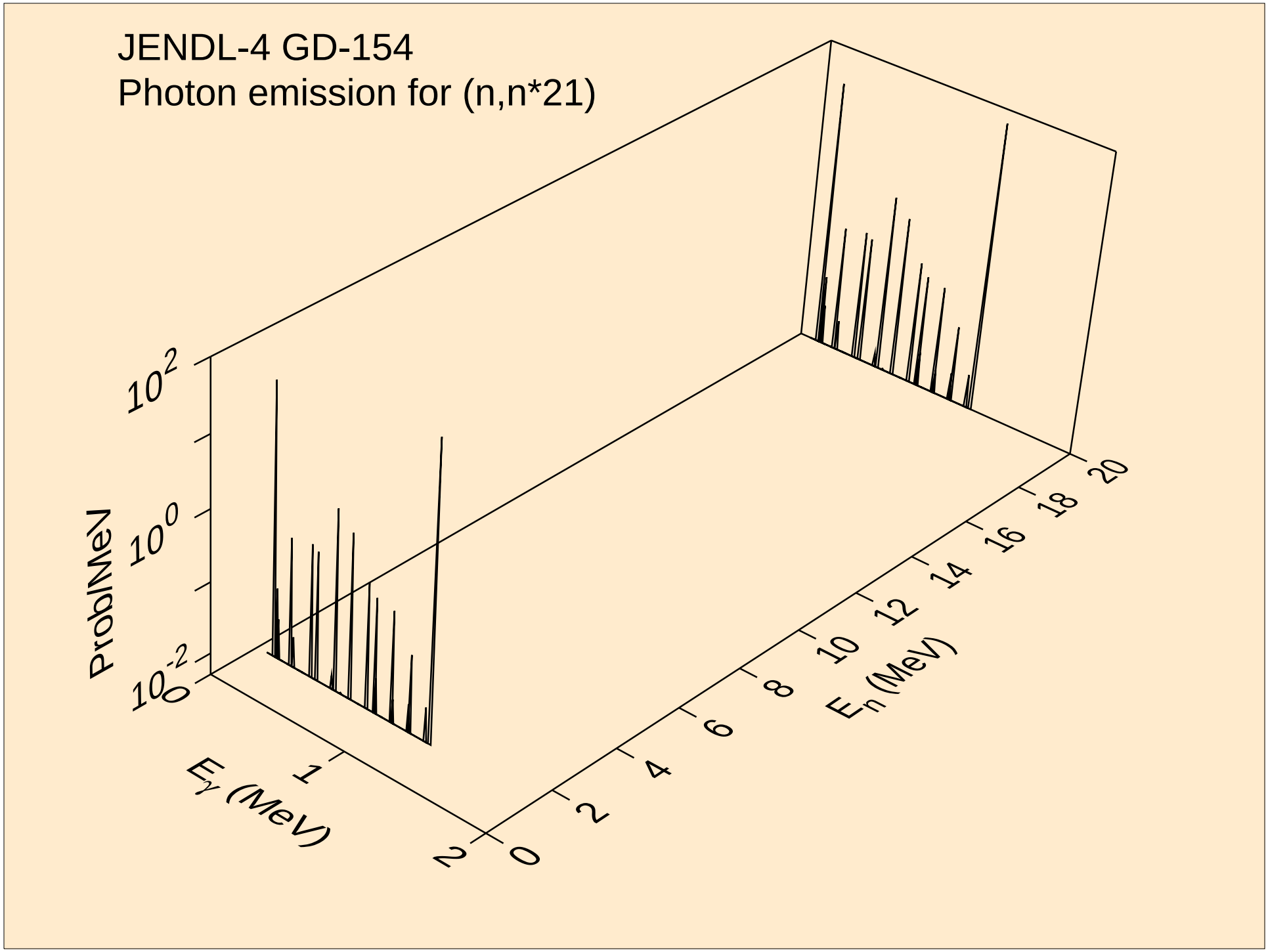
JENDL-4 GD-154
Photon emission for (n,n*21)
Prob/MeV
$10^{2}$
$10^{0}$
$10^{-2}$
$E_\gamma$ (MeV)
0
1
2
$E_n$ (MeV)
0
2
4
6
8
10
12
14
16
18
20

JENDL-4 GD-154
Photon emission for (n,n*22)

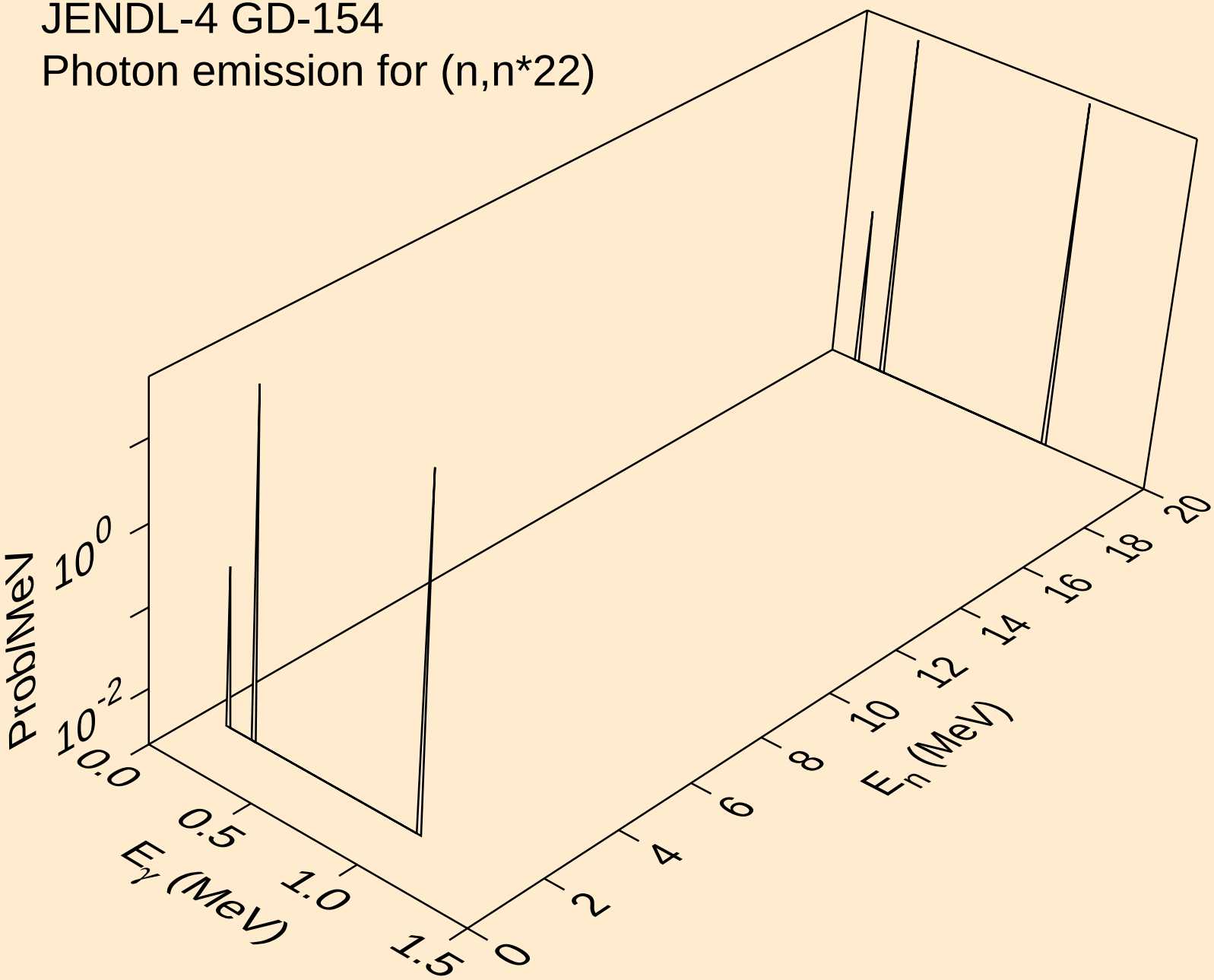

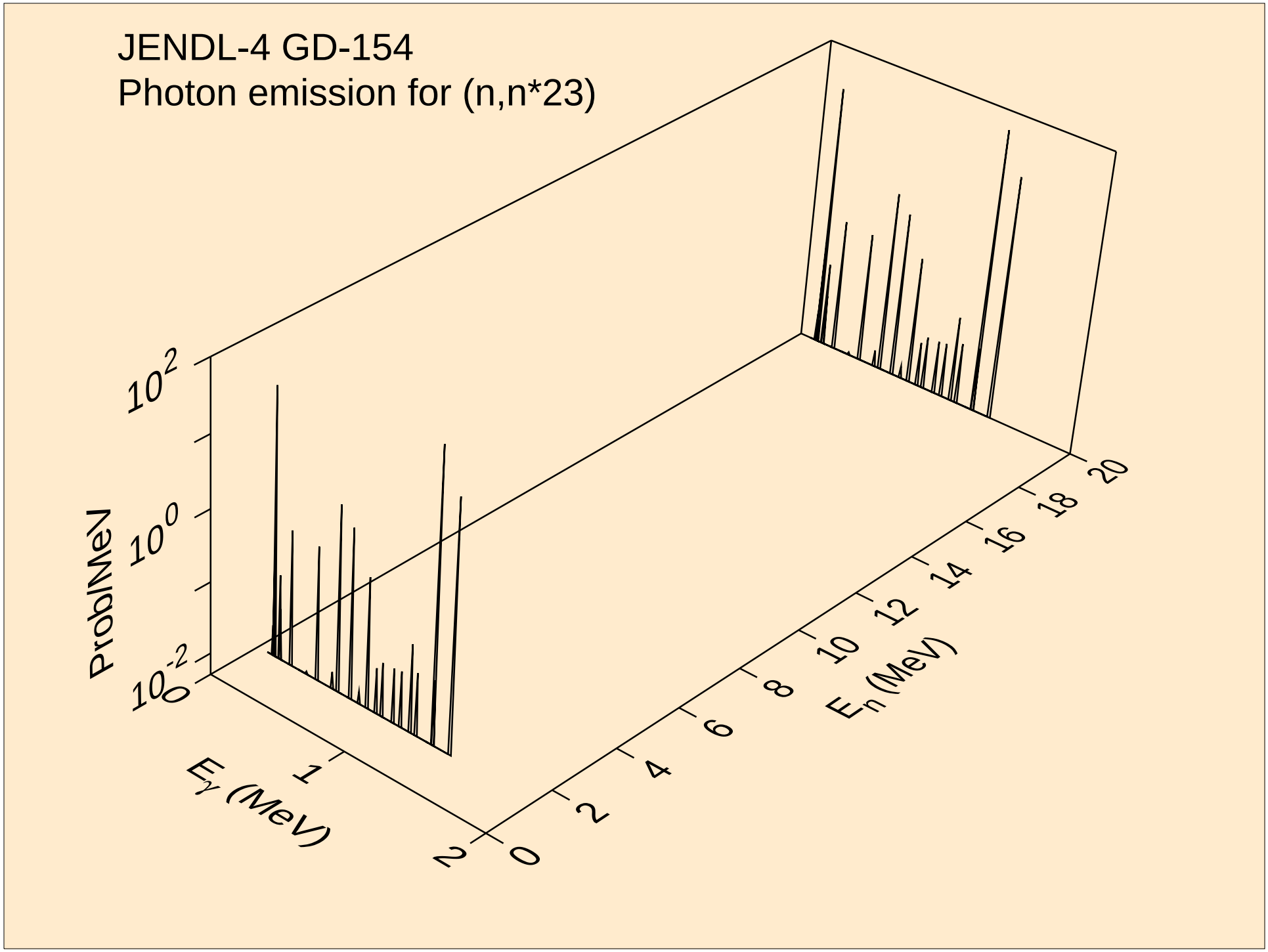
JENDL-4 GD-154
Photon emission for (n,n*23)
Prob/MeV
$10^{2}$
$10^{0}$
$10^{-2}$
$E_\gamma$ (MeV)
0
1
2
$E_n$ (MeV)
0
2
4
6
8
10
12
14
16
18
20

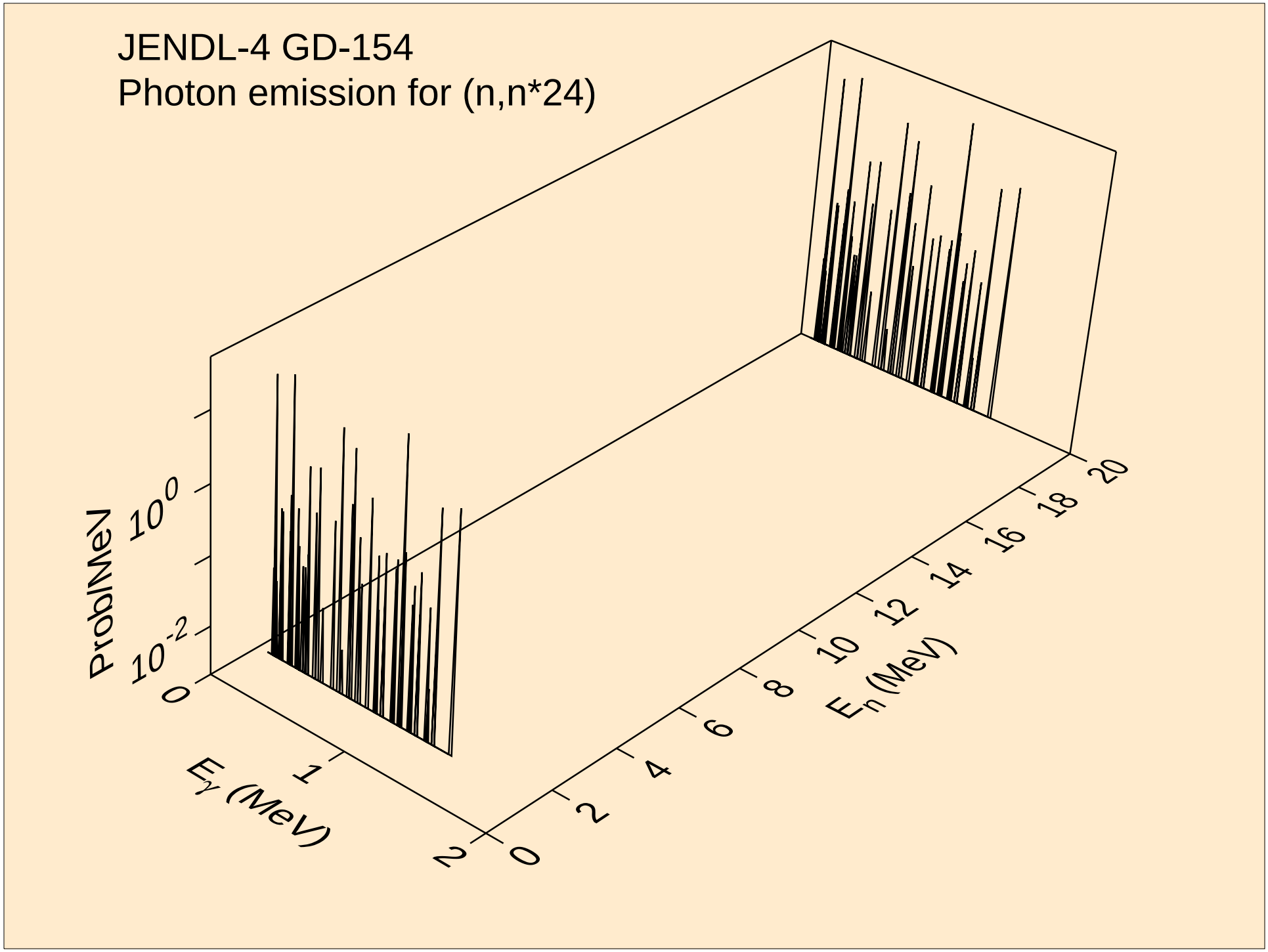
JENDL-4 GD-154
Photon emission for (n,n*24)
Prob/MeV
$10^0$
$10^{-2}$
0
1
2
$E_\gamma$ (MeV)
0
2
4
6
8
10
12
14
16
18
20
$E_n$ (MeV)

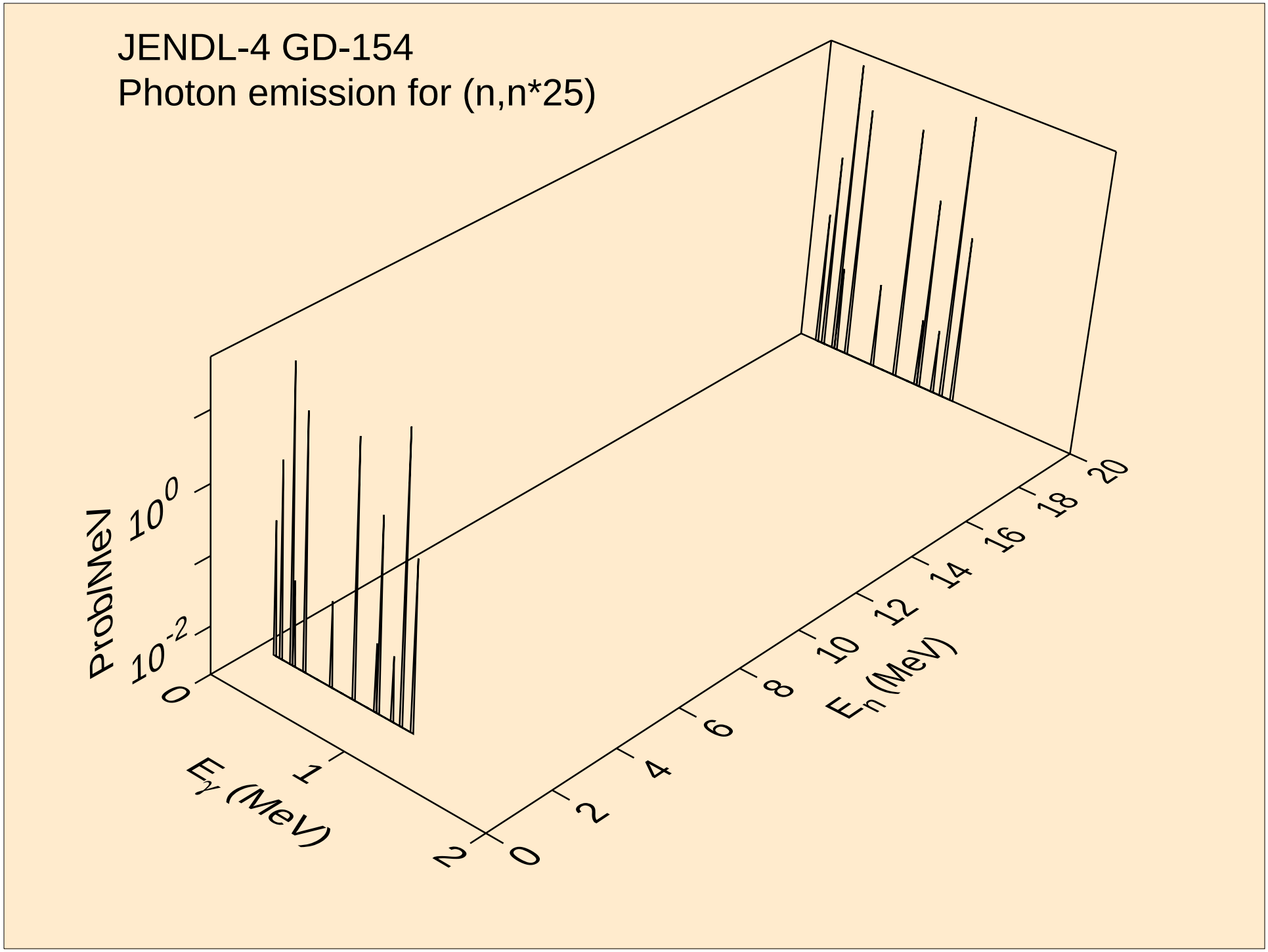
JENDL-4 GD-154
Photon emission for (n,n*25)
Prob/MeV
$10^0$
$10^{-2}$
0
1
2
$E_\gamma$ (MeV)
0
2
4
6
8
10
12
14
16
18
20
$E_n$ (MeV)

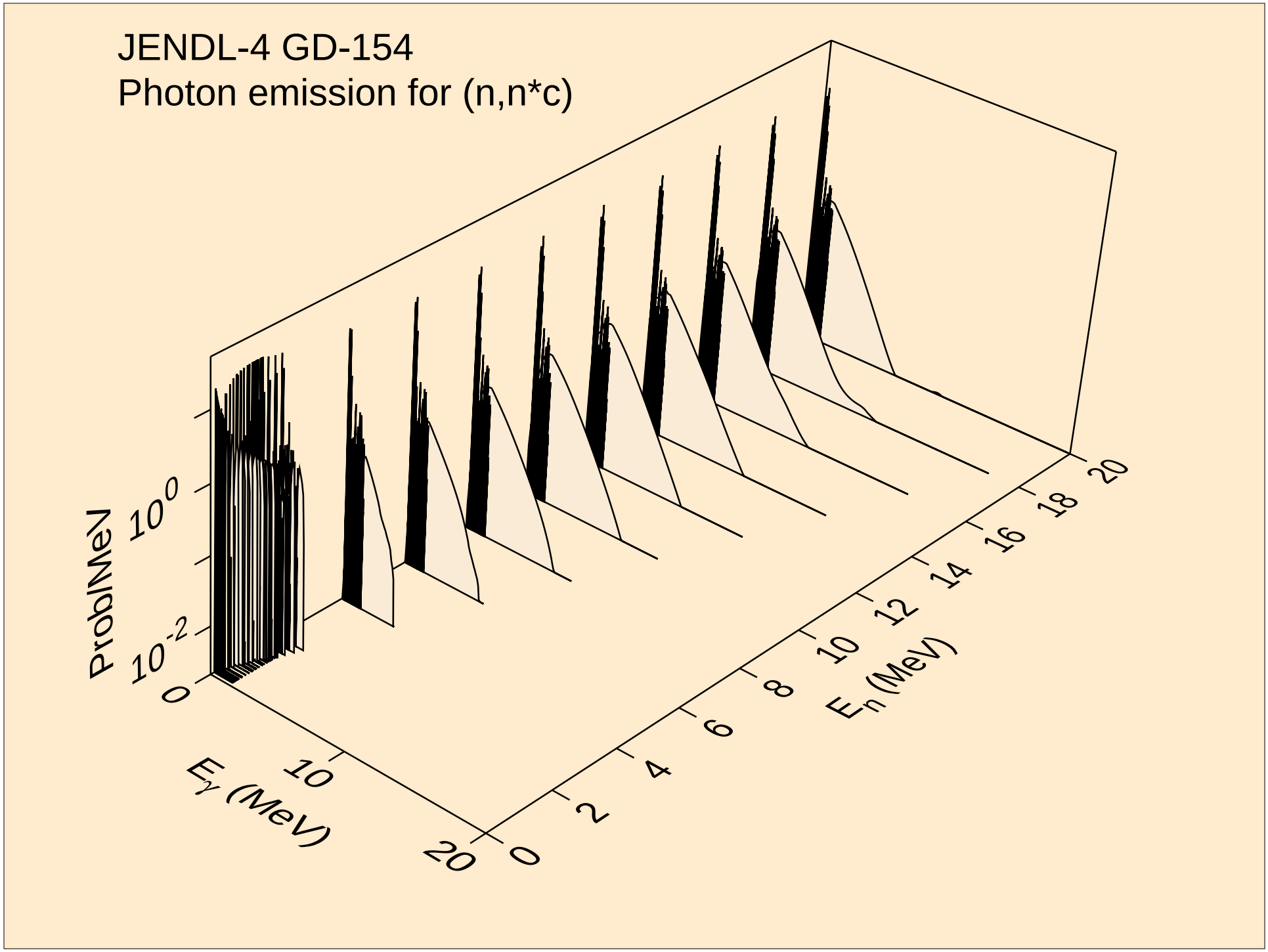
JENDL-4 GD-154
Photon emission for (n,n*c)
Prob/MeV
$10^0$
$10^{-2}$
0
10
20
$E_\gamma$ (MeV)
0
2
4
6
8
10
12
14
16
18
20
$E_n$ (MeV)

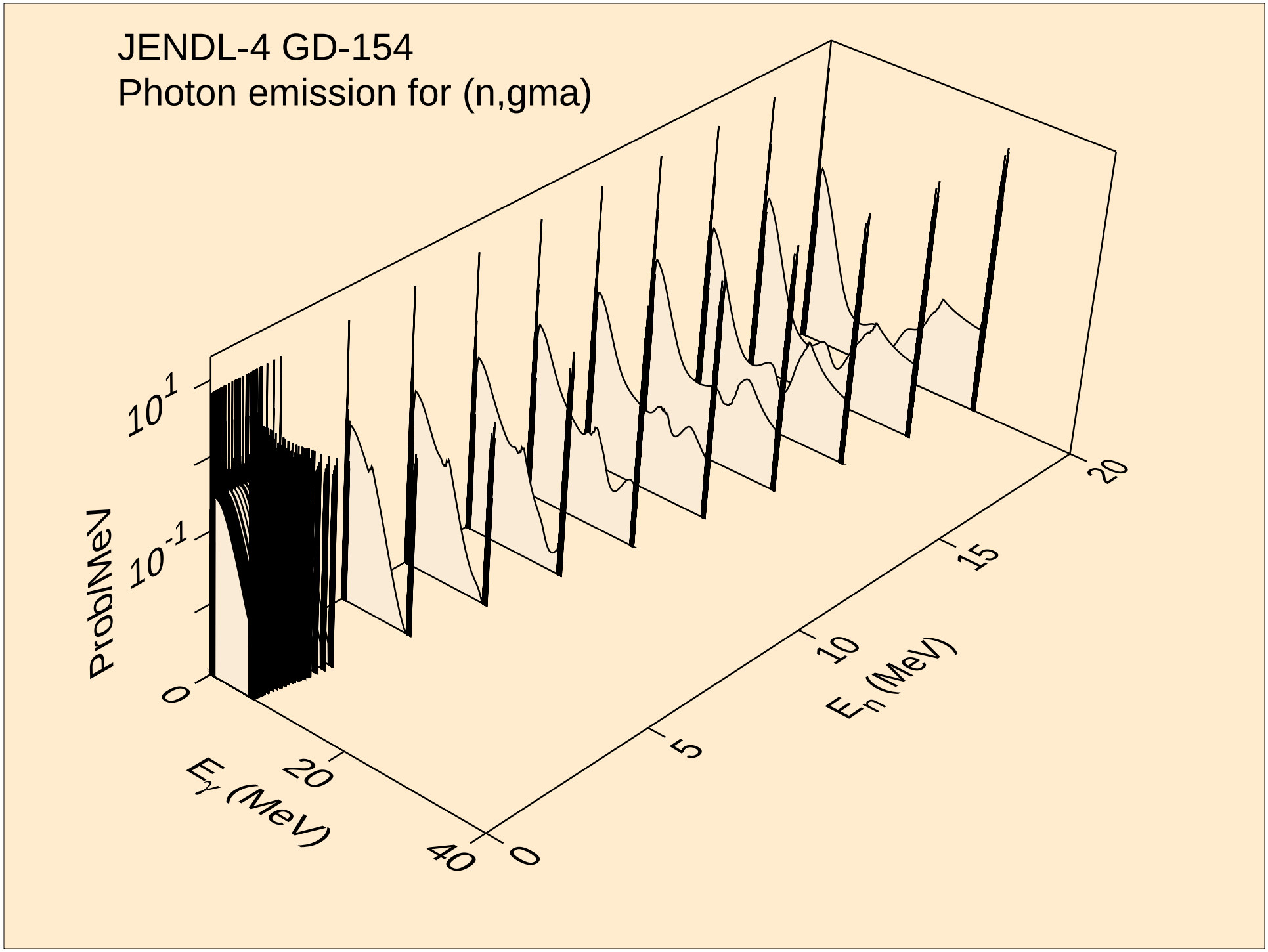
JENDL-4 GD-154
Photon emission for (n,gma)
Prob/MeV
$10^{1}$
$10^{-1}$
0
20
40
$E_\gamma$ (MeV)
0
5
10
15
20
$E_n$ (MeV)

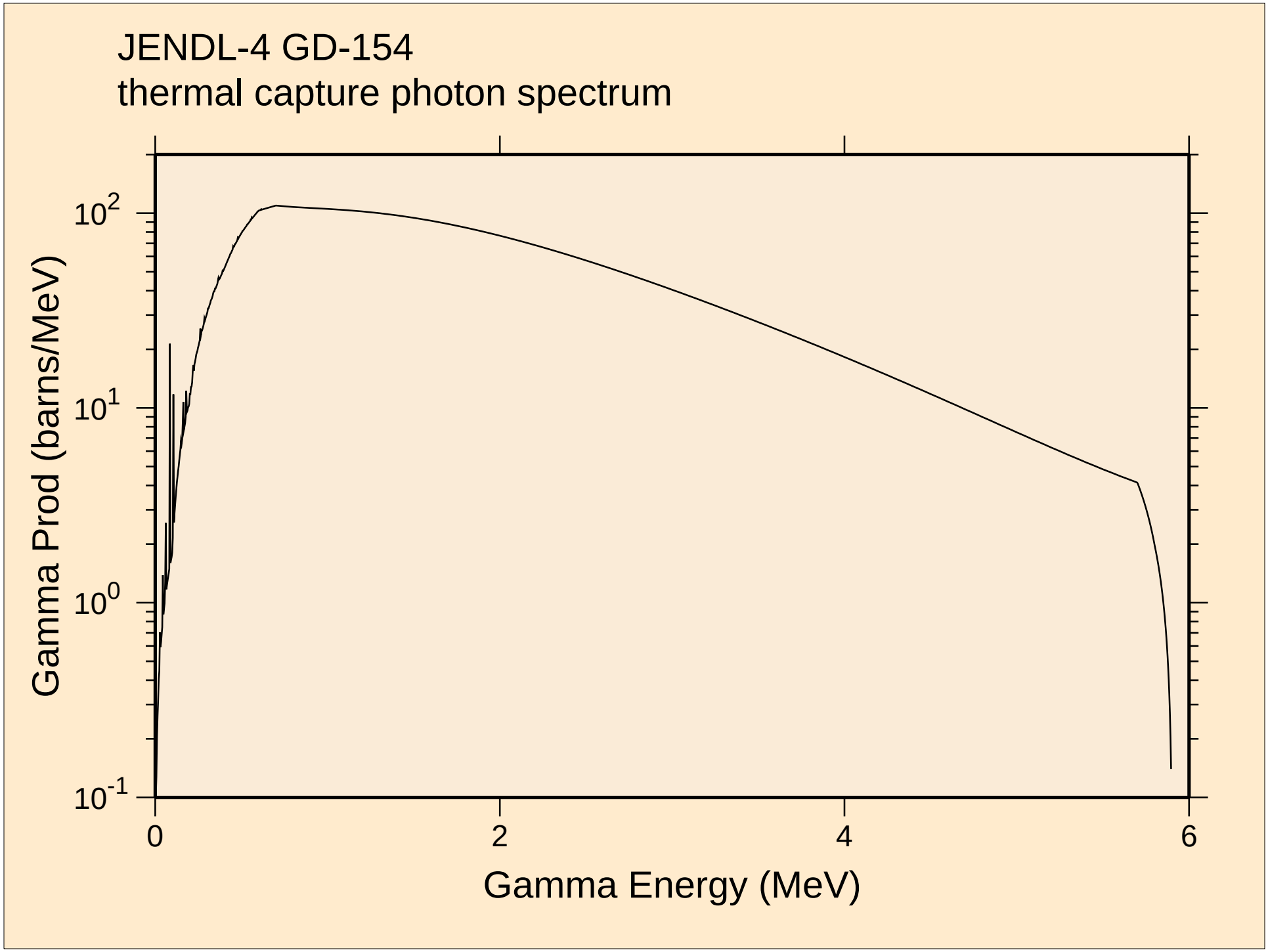
JENDL-4 GD-154
thermal capture photon spectrum
Gamma Prod (barns/MeV)
$10^{2}$
$10^{1}$
$10^{0}$
$10^{-1}$
0
2
4
6
Gamma Energy (MeV)

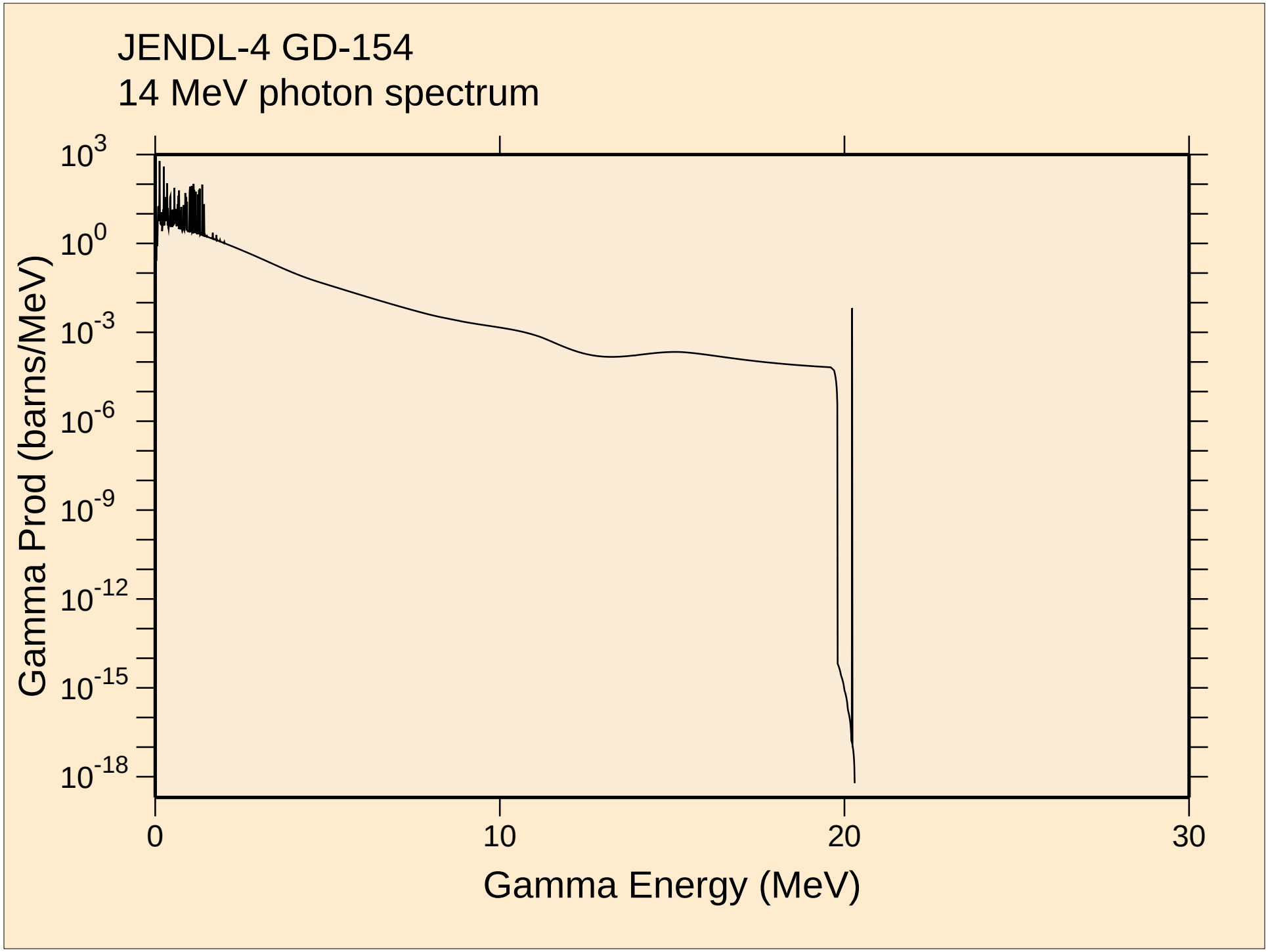
JENDL-4 GD-154
14 MeV photon spectrum
Gamma Prod (barns/MeV)
10^3
10^0
10^-3
10^-6
10^-9
10^-12
10^-15
10^-18
0
10
20
30
Gamma Energy (MeV)

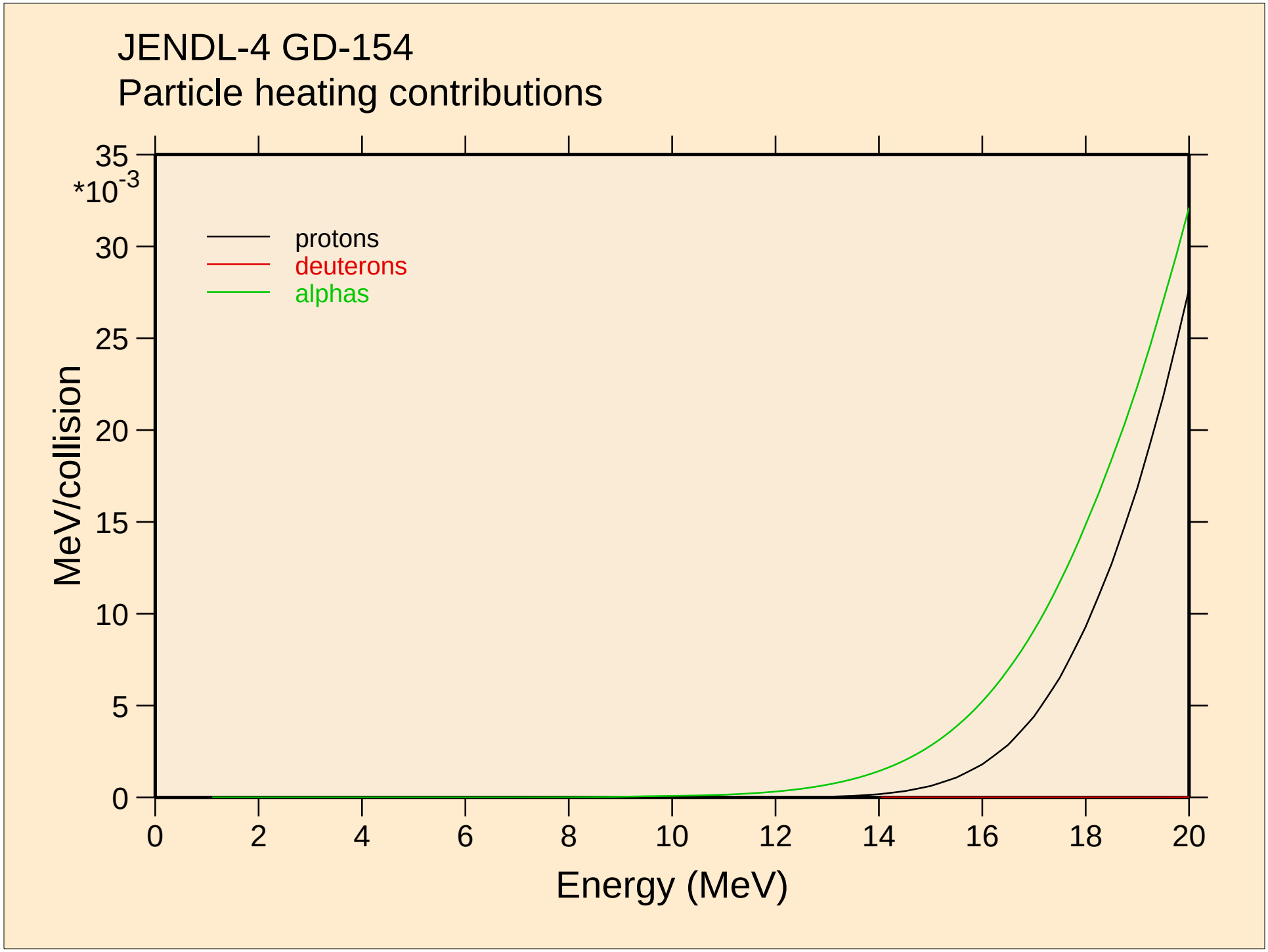
JENDL-4 GD-154
Particle heating contributions
*10-3
35
30
25
20
15
10
5
0
MeV/collision
protons
deuterons
alphas
0
2
4
6
8
10
12
14
16
18
20
Energy (MeV)

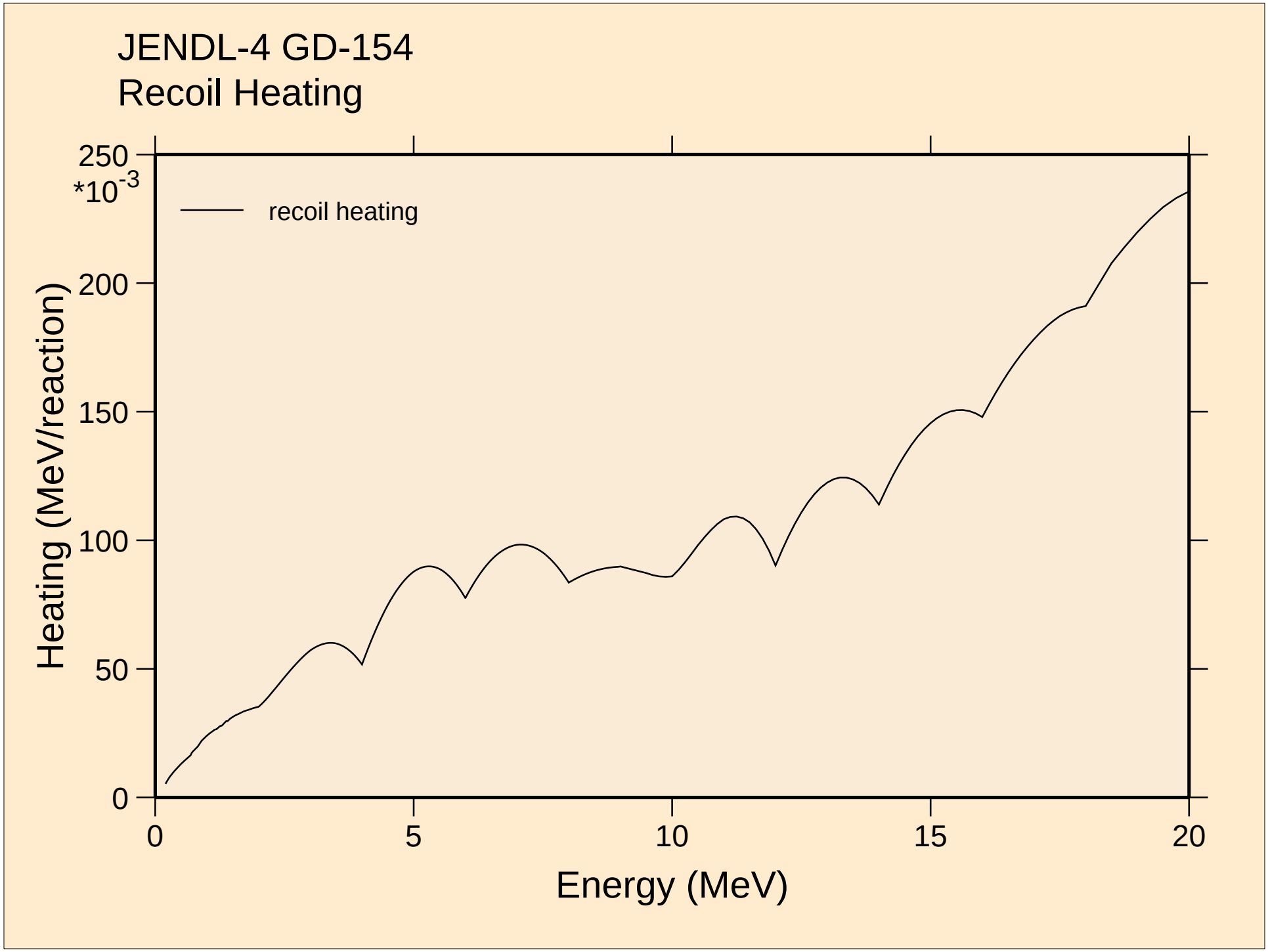
JENDL-4 GD-154
Recoil Heating
recoil heating
Heating (MeV/reaction)
*10^-3
250
200
150
100
50
0
0
5
10
15
20
Energy (MeV)

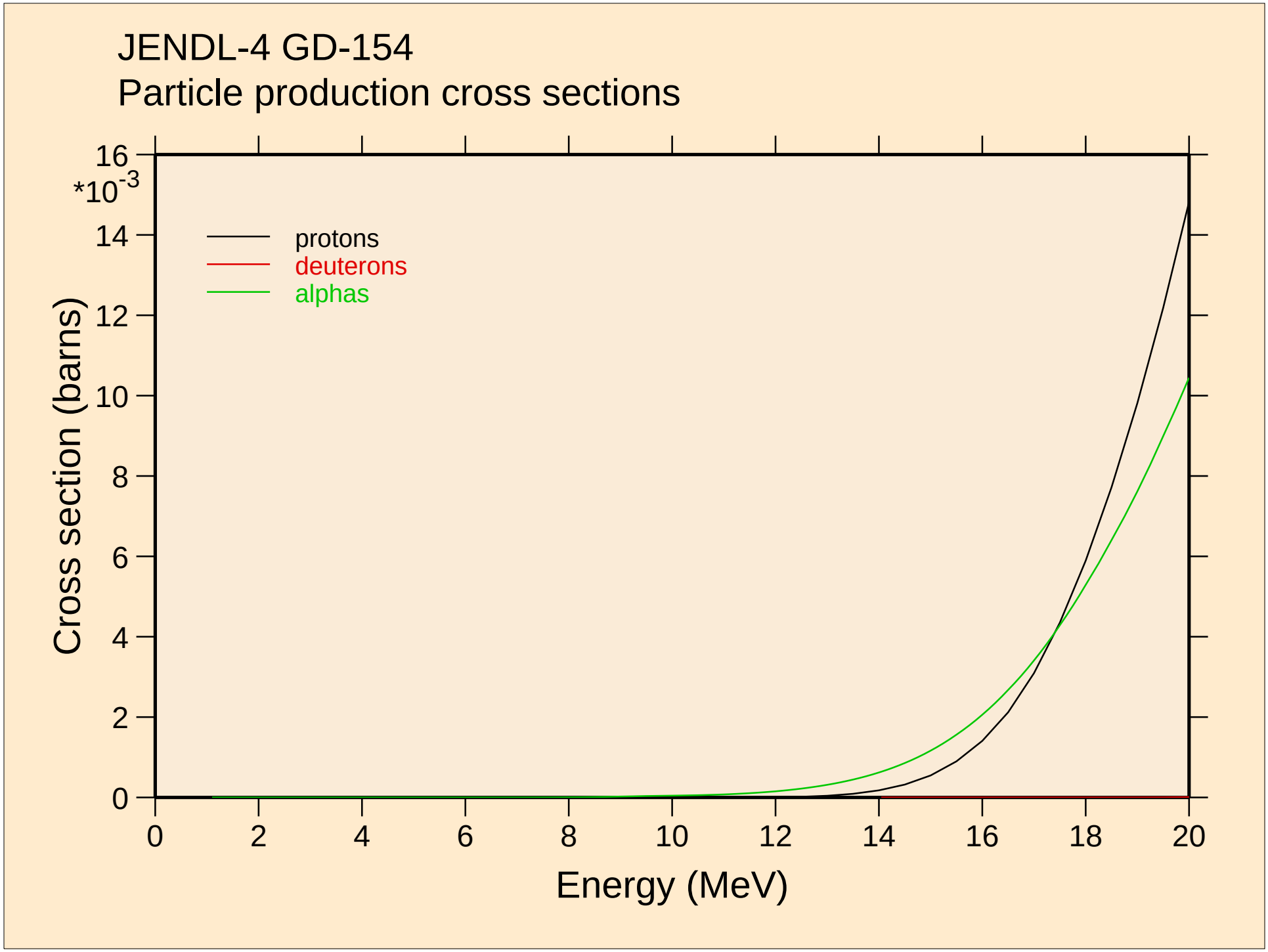
JENDL-4 GD-154
Particle production cross sections
protons
deuterons
alphas
Cross section (barns)
*10-3
16
14
12
10
8
6
4
2
0
0
2
4
6
8
10
12
14
16
18
20
Energy (MeV)

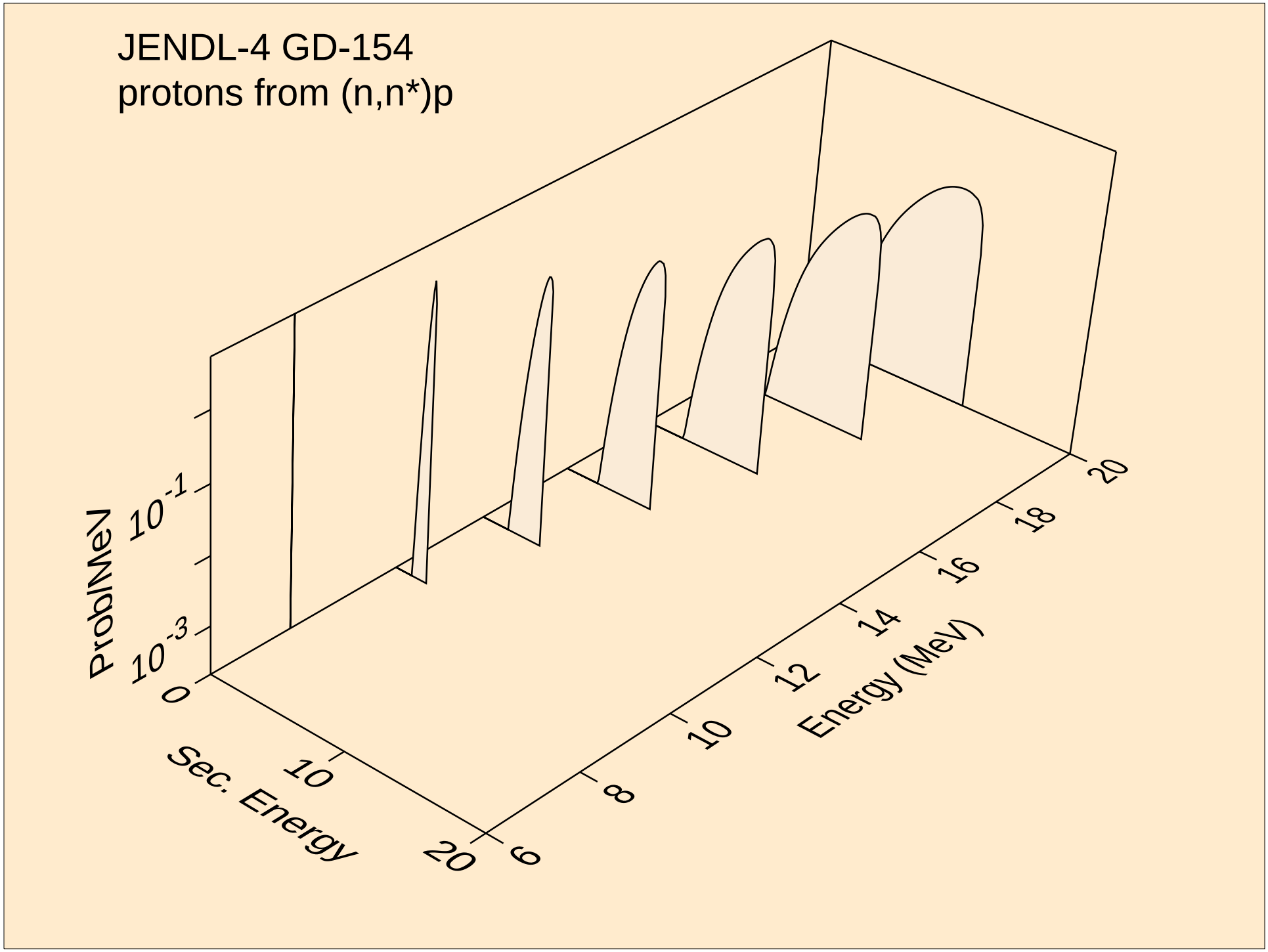
JENDL-4 GD-154
protons from (n,n*)p
Prob/MeV
10^-1
10^-3
0
Sec. Energy
10
20
6
8
10
12
14
16
18
20
Energy (MeV)

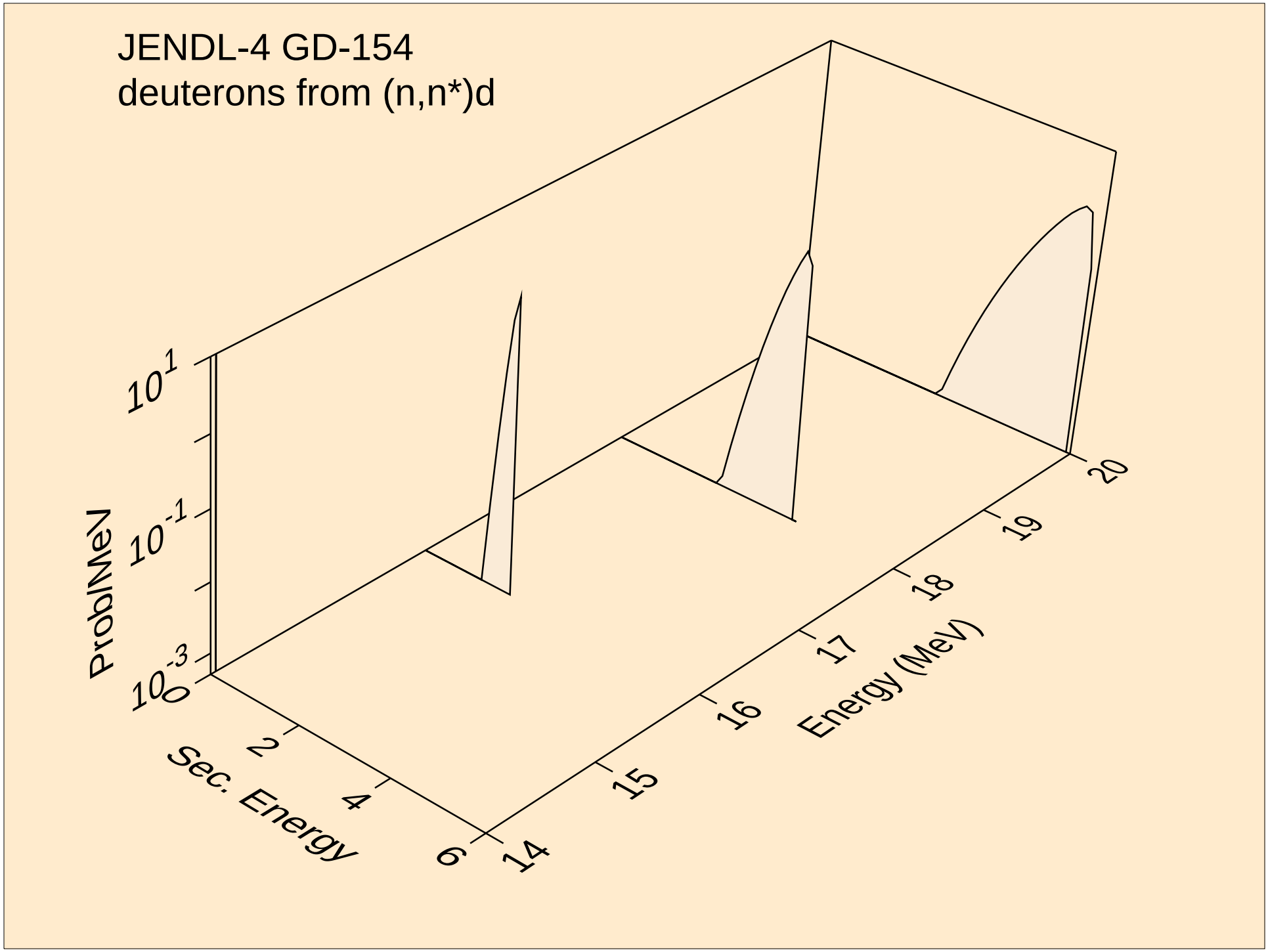
JENDL-4 GD-154
deuterons from (n,n*)d
Prob/MeV
10^1
10^-1
10^-3
0
2
4
6
Sec. Energy
14
15
16
17
18
19
20
Energy (MeV)

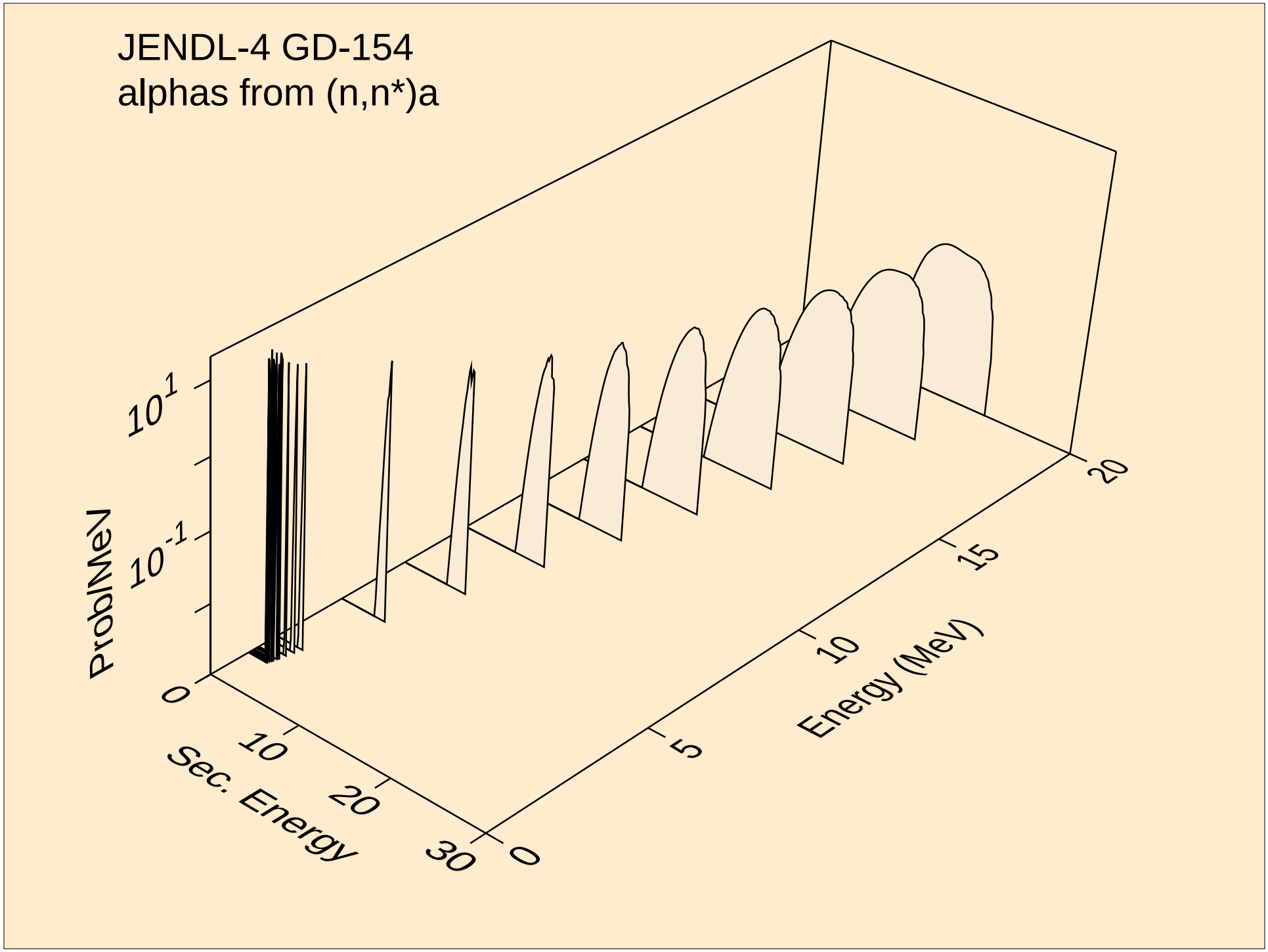
JENDL-4 GD-154
alphas from (n,n*)a
Prob/MeV
$10^{1}$
$10^{-1}$
0
10
20
30
Sec. Energy
0
5
10
15
20
Energy (MeV)

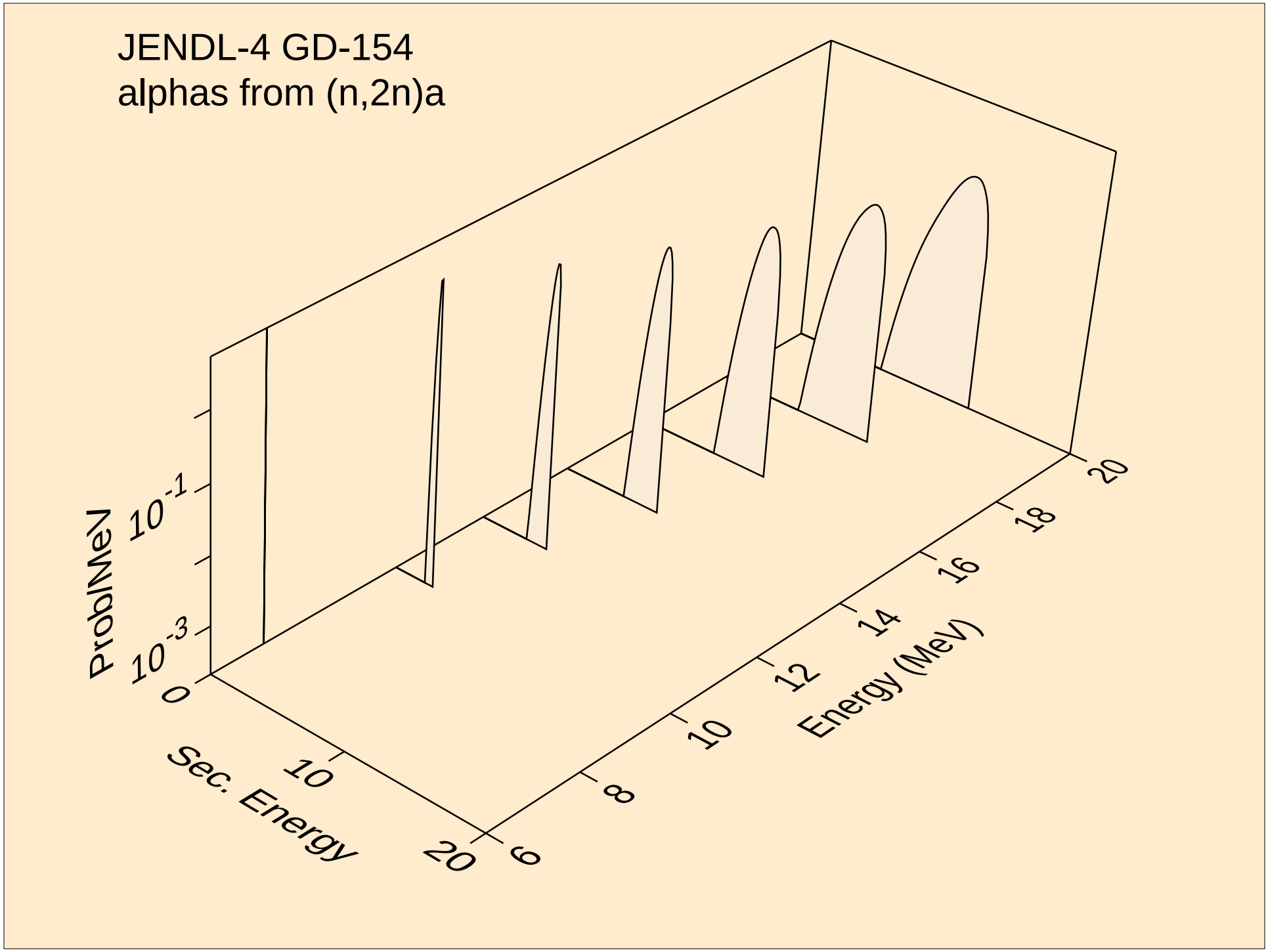
JENDL-4 GD-154
alphas from (n,2n)a
Prob/MeV
10^-1
10^-3
0
Sec. Energy
10
20
6
8
10
12
14
16
18
20
Energy (MeV)