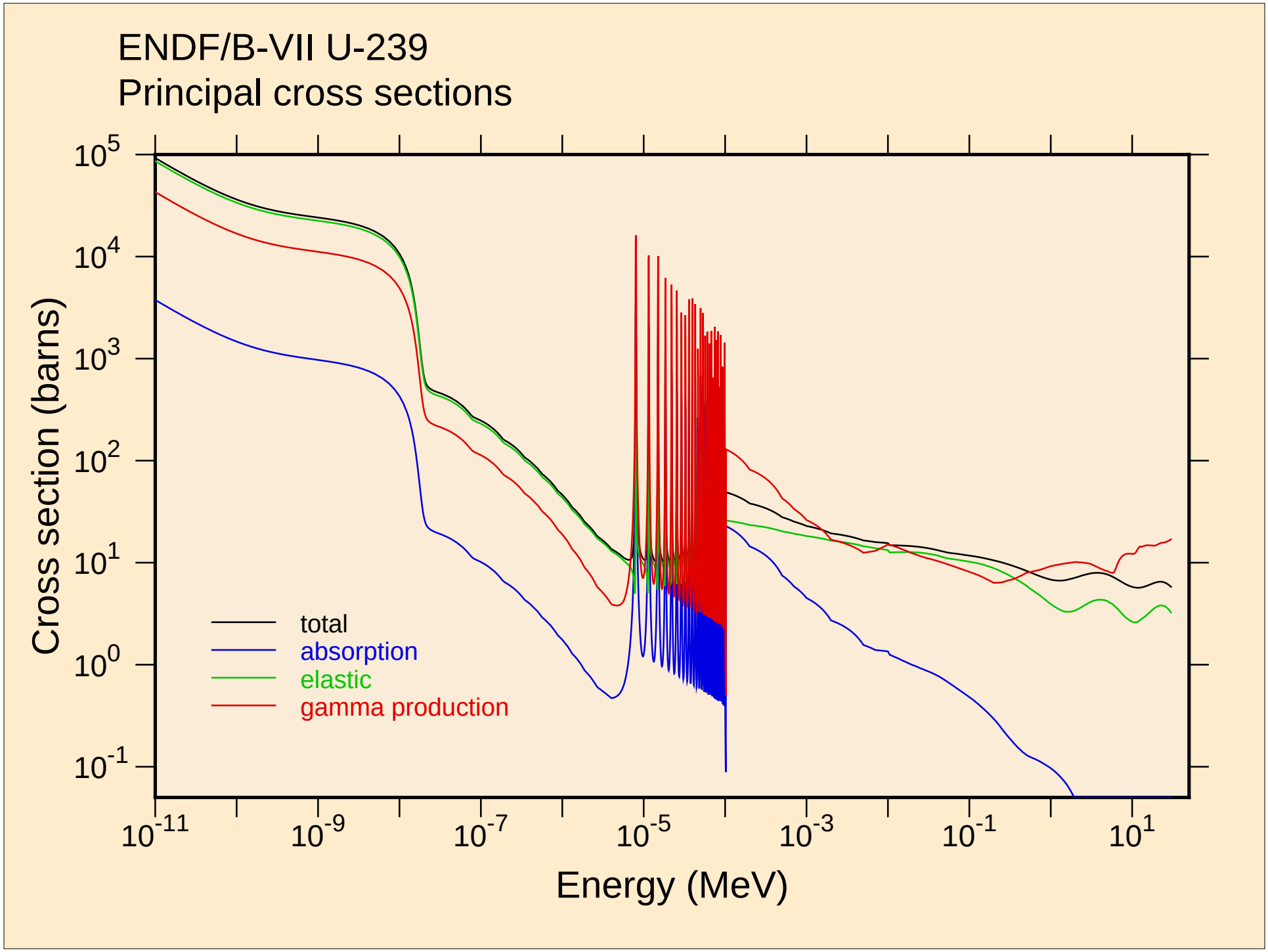
ENDF/B-VII U-239
Principal cross sections
Cross section (barns)
Energy (MeV)
total
absorption
elastic
gamma production
10^{5}
10^{4}
10^{3}
10^{2}
10^{1}
10^{0}
10^{-1}
10^{-11}
10^{-9}
10^{-7}
10^{-5}
10^{-3}
10^{-1}
10^{1}

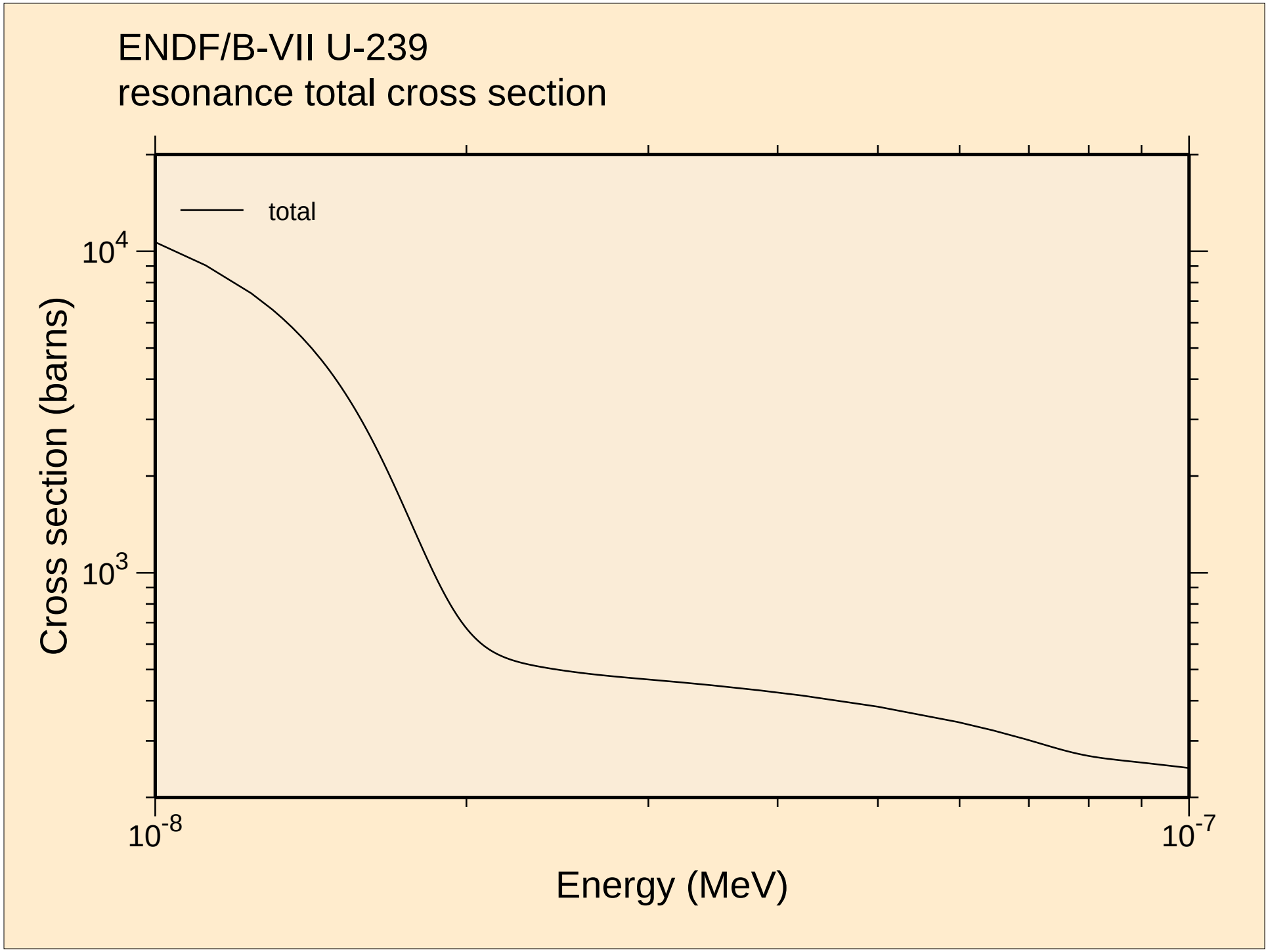
ENDF/B-VII U-239
resonance total cross section
total
10^4
10^3
Cross section (barns)
10^{-8}
10^{-7}
Energy (MeV)

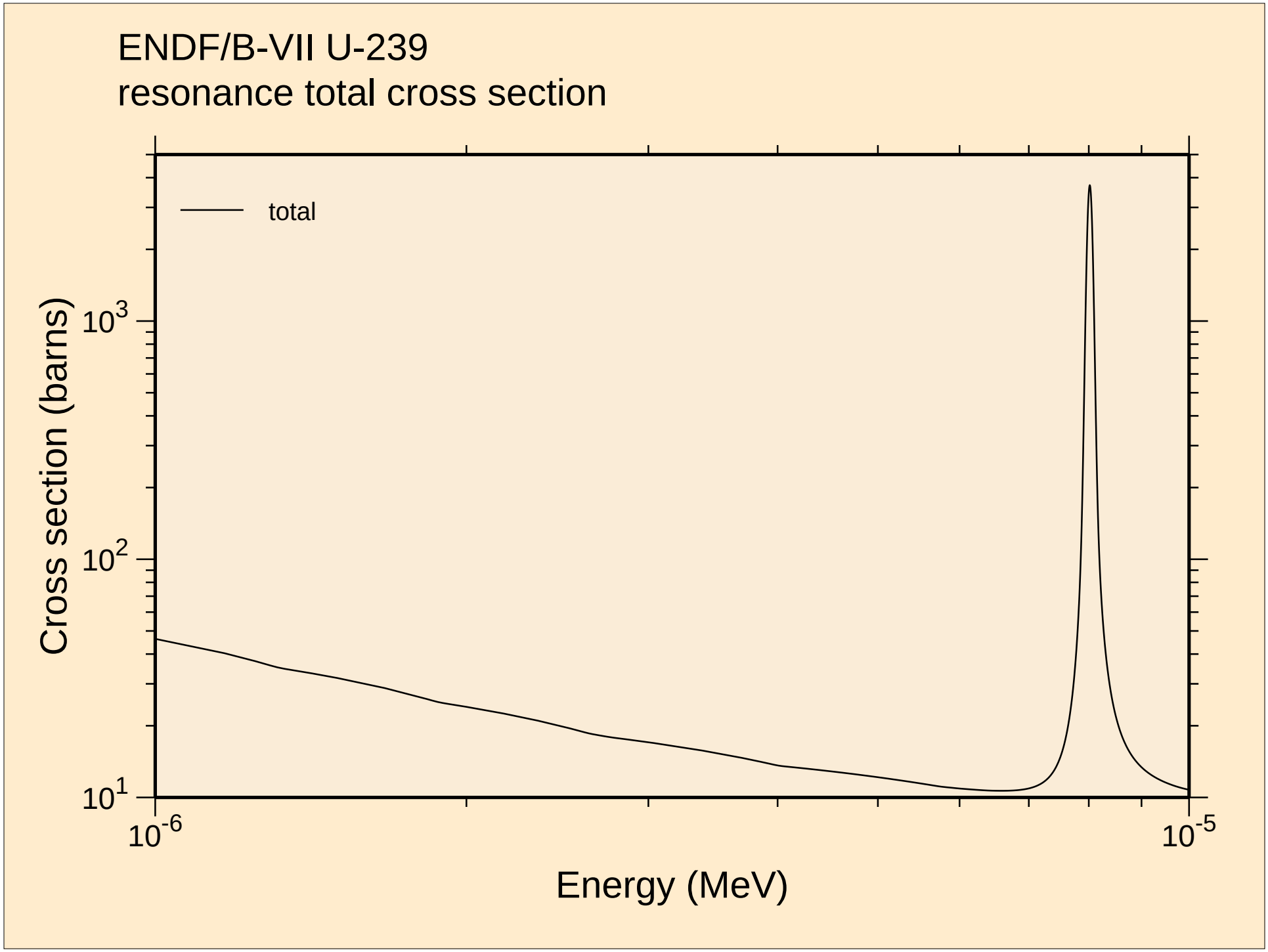
ENDF/B-VII U-239
resonance total cross section
total
Cross section (barns)
10^3
10^2
10^1
10^{-6}
10^{-5}
Energy (MeV)

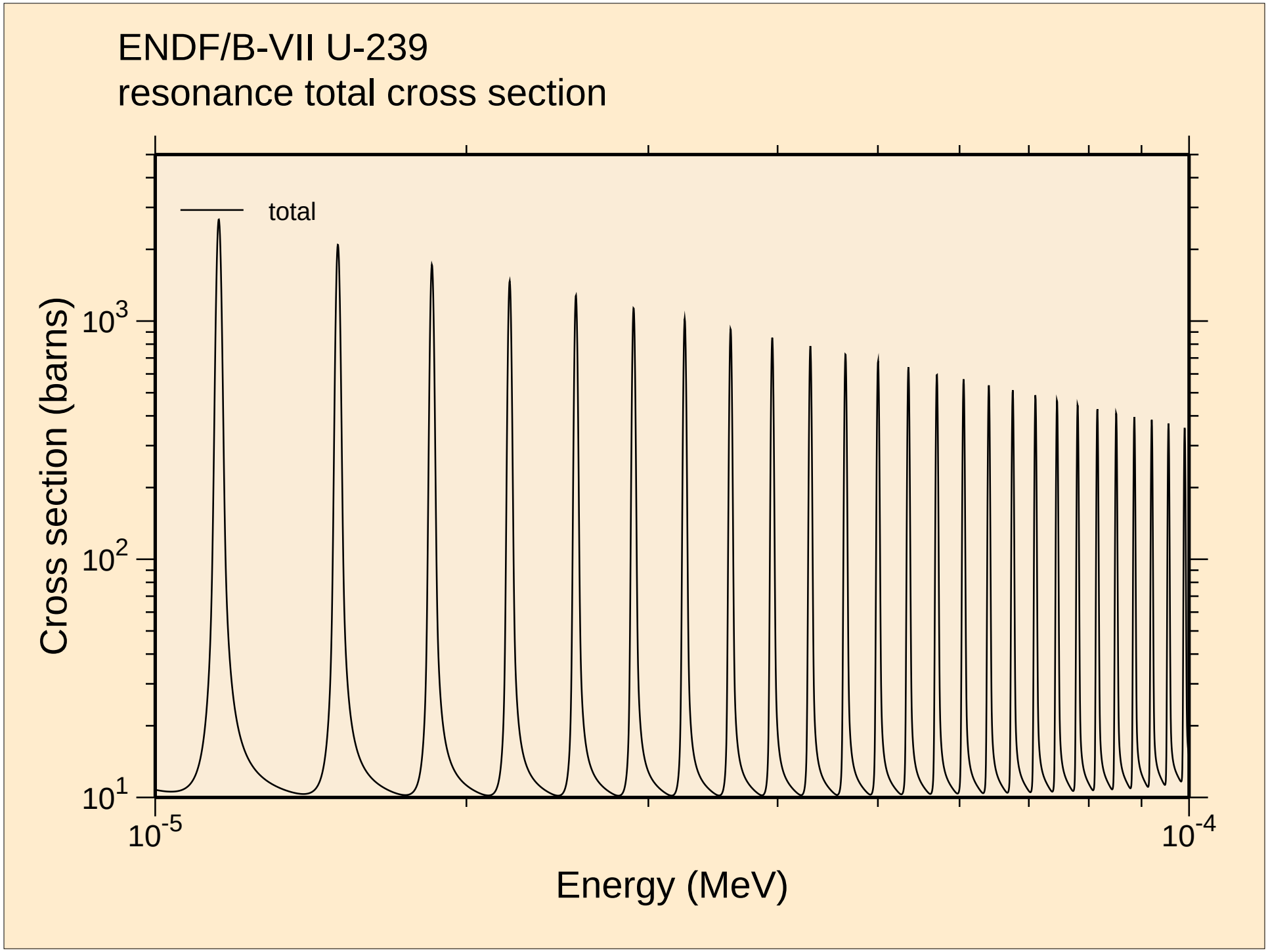
ENDF/B-VII U-239
resonance total cross section
total
Cross section (barns)
10^3
10^2
10^1
10^{-5}
10^{-4}
Energy (MeV)

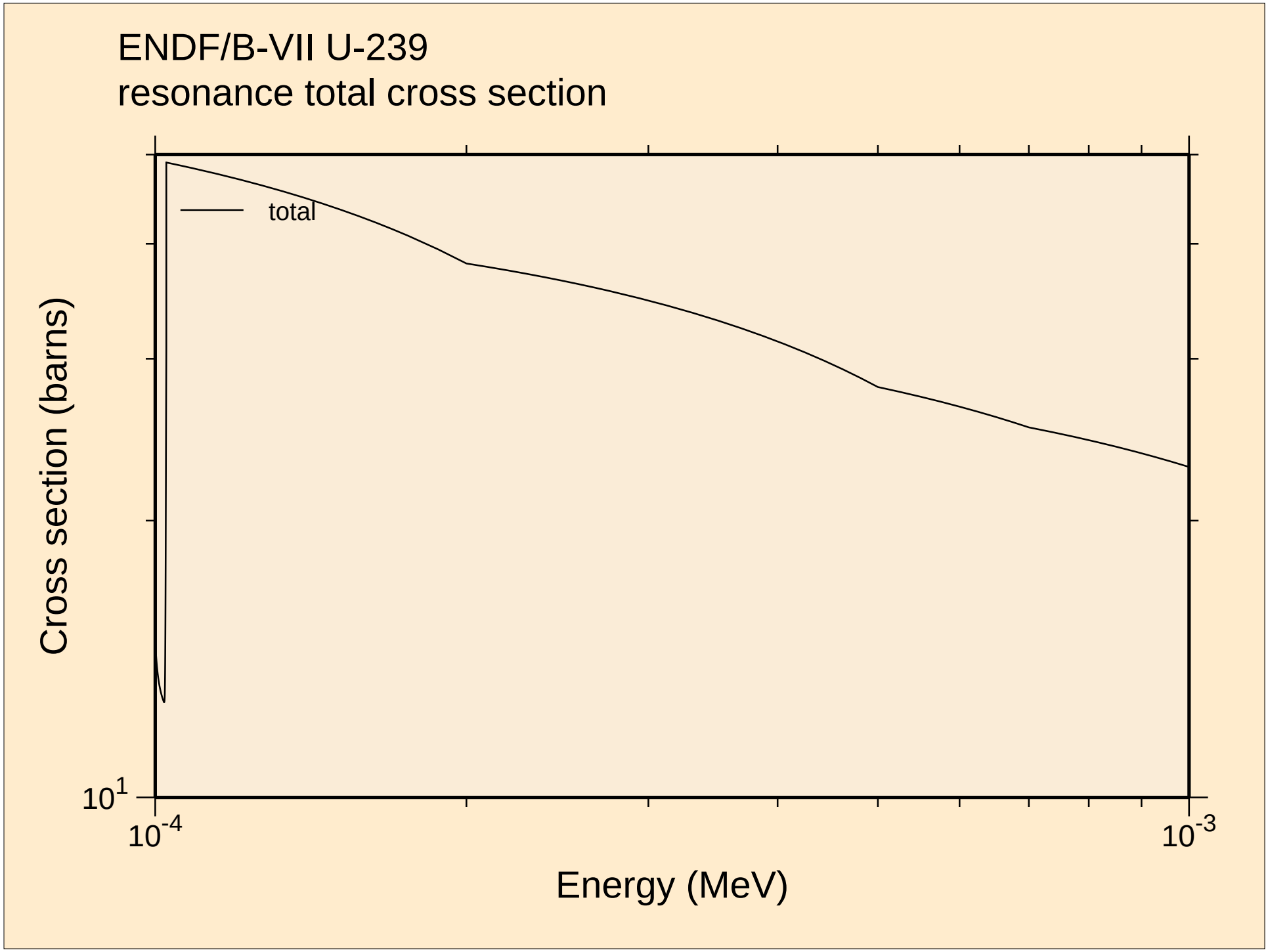
ENDF/B-VII U-239
resonance total cross section
total
Cross section (barns)
10^1
10^{-4}
10^{-3}
Energy (MeV)

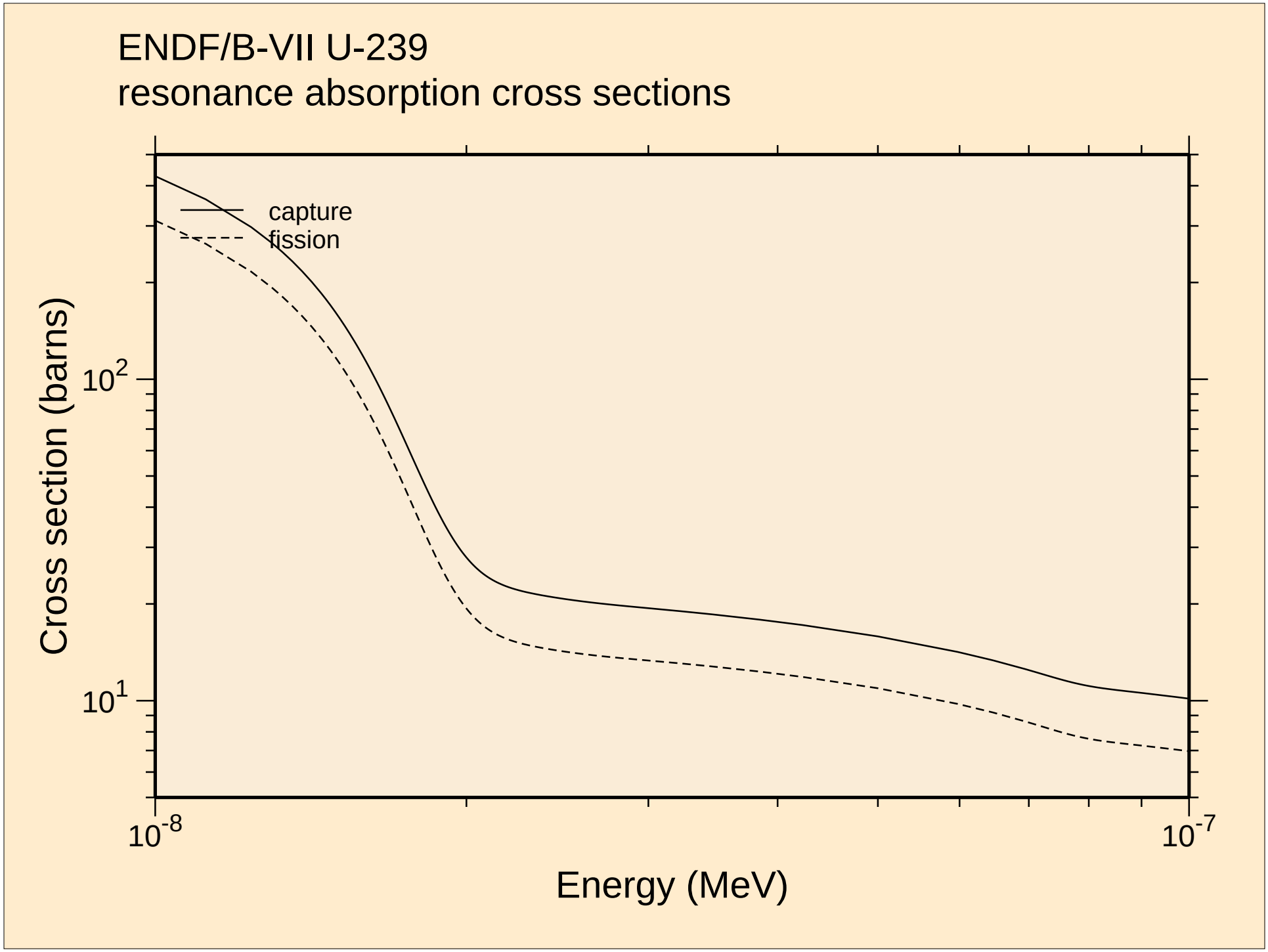
ENDF/B-VII U-239
resonance absorption cross sections
capture
fission
Cross section (barns)
10^2
10^1
10^{-8}
10^{-7}
Energy (MeV)

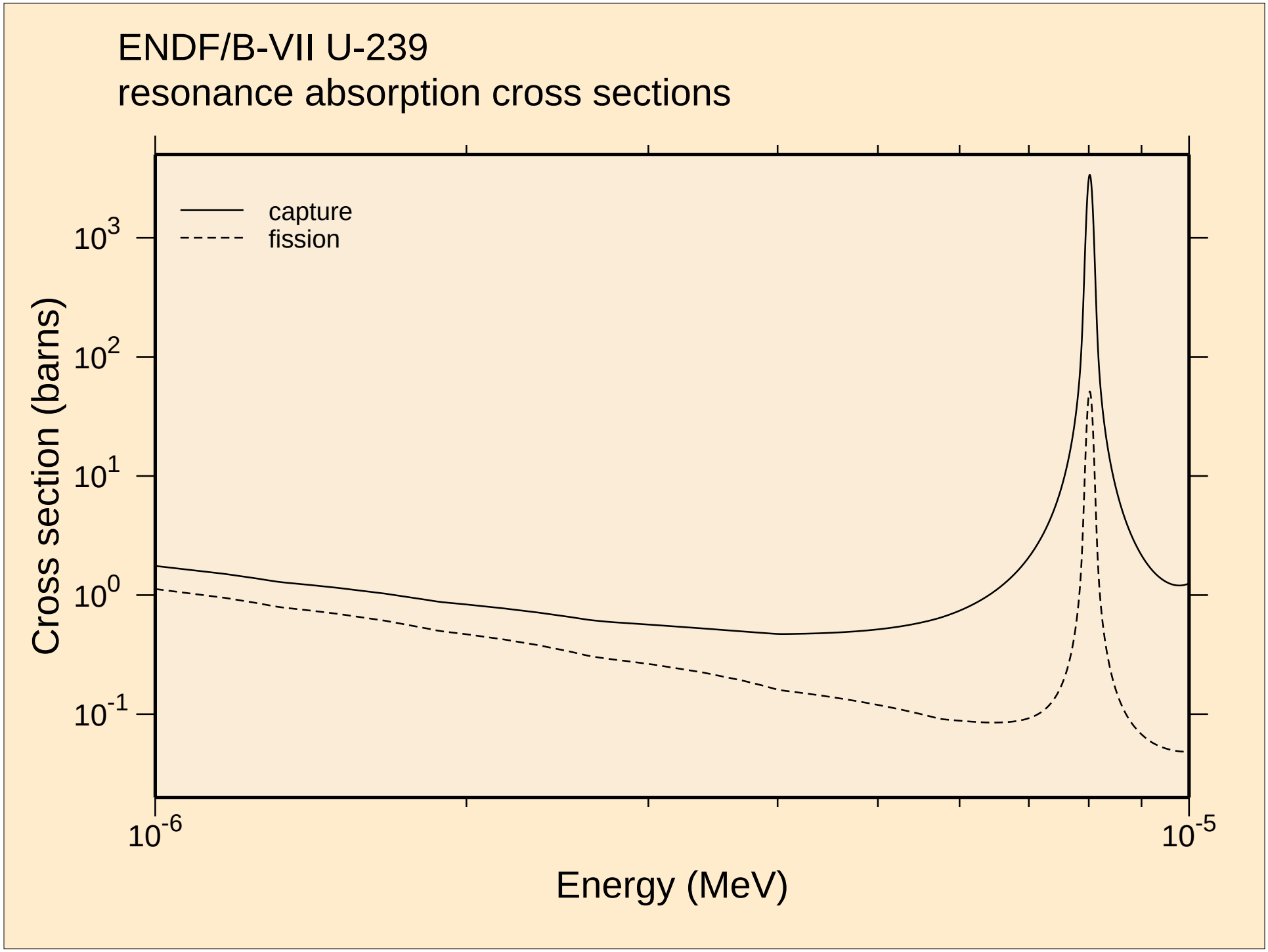
ENDF/B-VII U-239
resonance absorption cross sections
capture
fission
Cross section (barns)
10^{3}
10^{2}
10^{1}
10^{0}
10^{-1}
10^{-6}
10^{-5}
Energy (MeV)

ENDF/B-VII U-239
resonance absorption cross sections

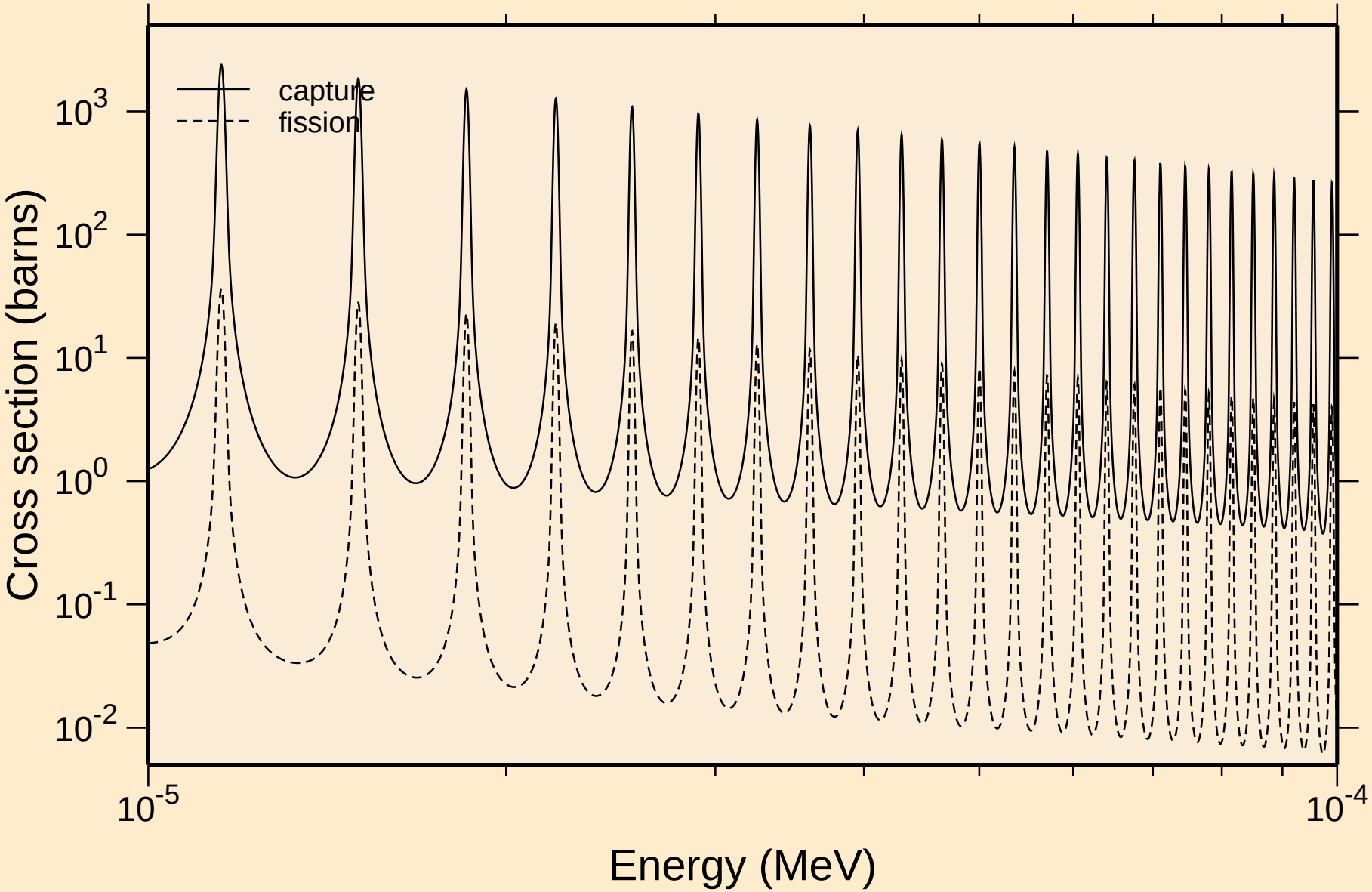

ENDF/B-VII U-239
resonance absorption cross sections

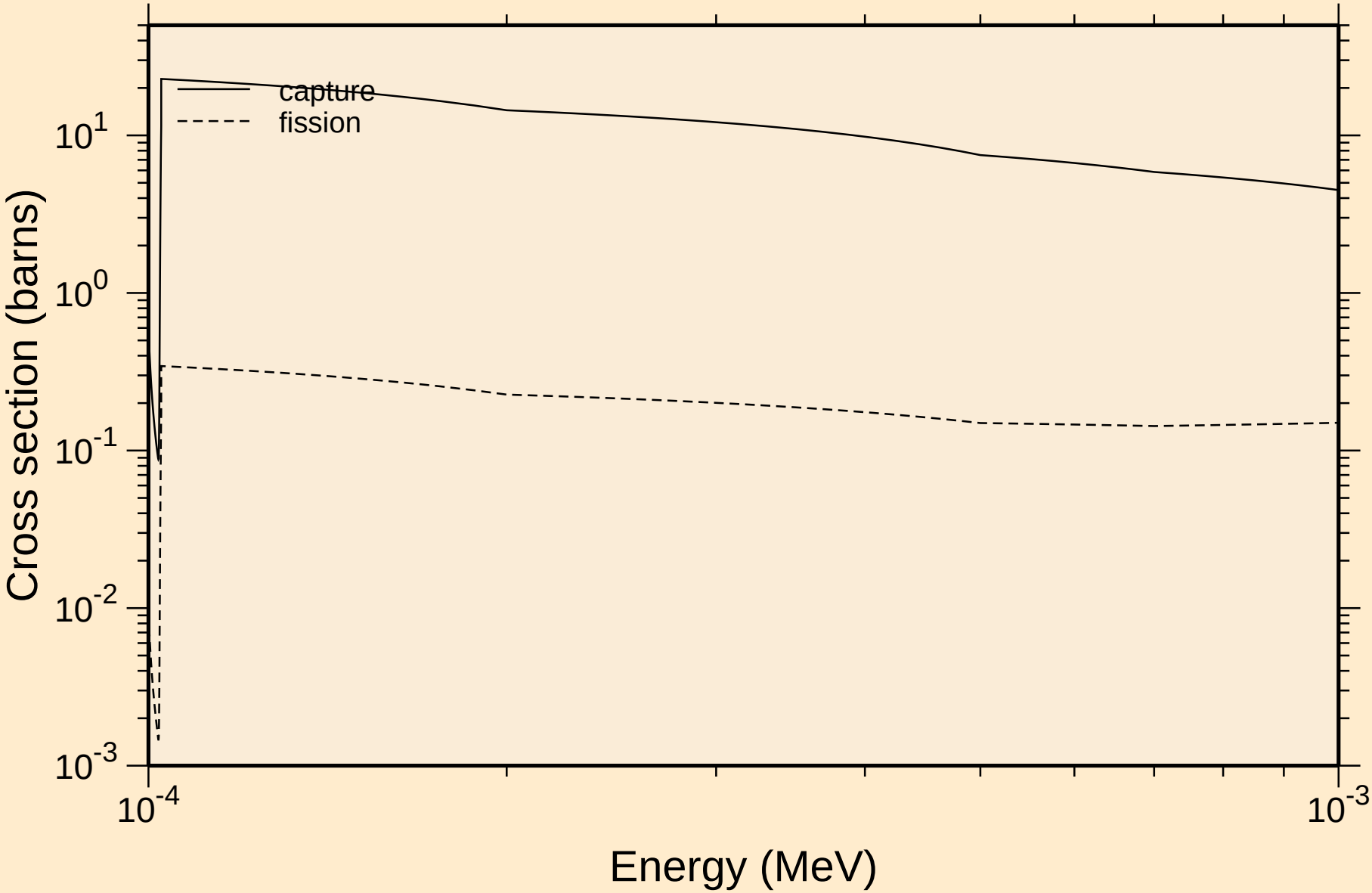

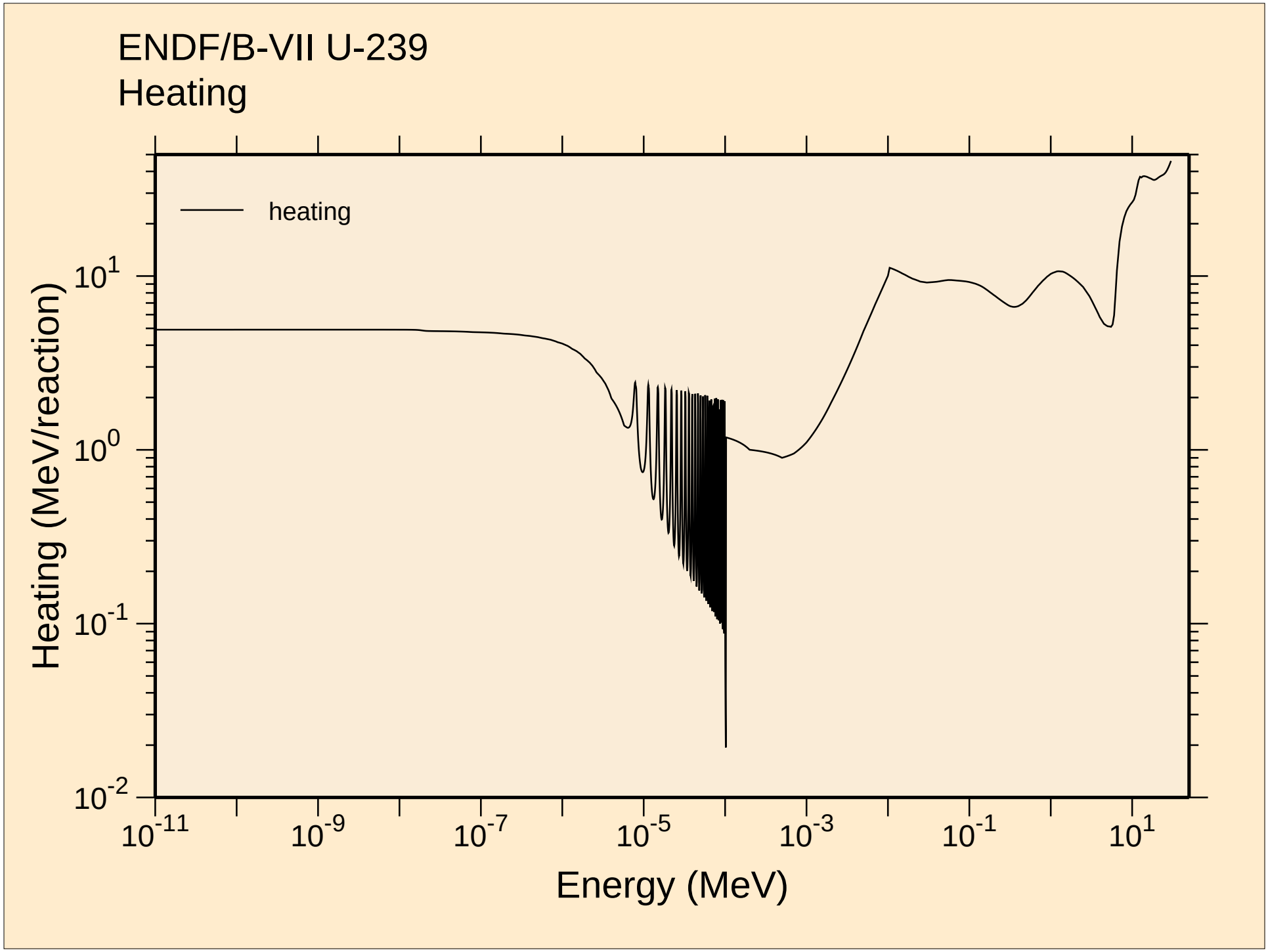
ENDF/B-VII U-239
Heating
heating
Heating (MeV/reaction)
Energy (MeV)
10^1
10^0
10^-1
10^-2
10^-11
10^-9
10^-7
10^-5
10^-3
10^-1
10^1

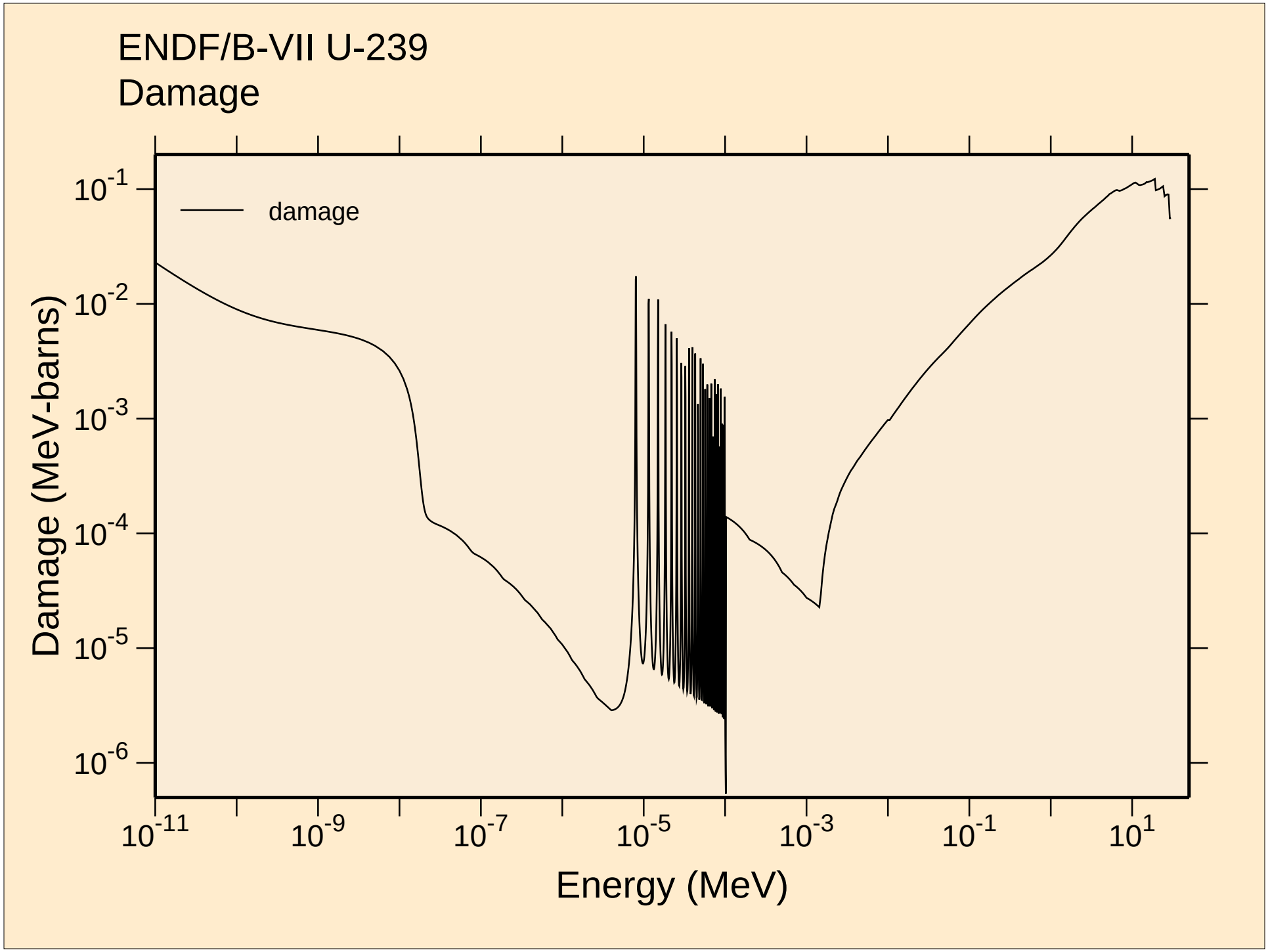
ENDF/B-VII U-239
Damage
damage
Damage (MeV-barns)
Energy (MeV)
10^-1
10^-2
10^-3
10^-4
10^-5
10^-6
10^-11
10^-9
10^-7
10^-5
10^-3
10^-1
10^1

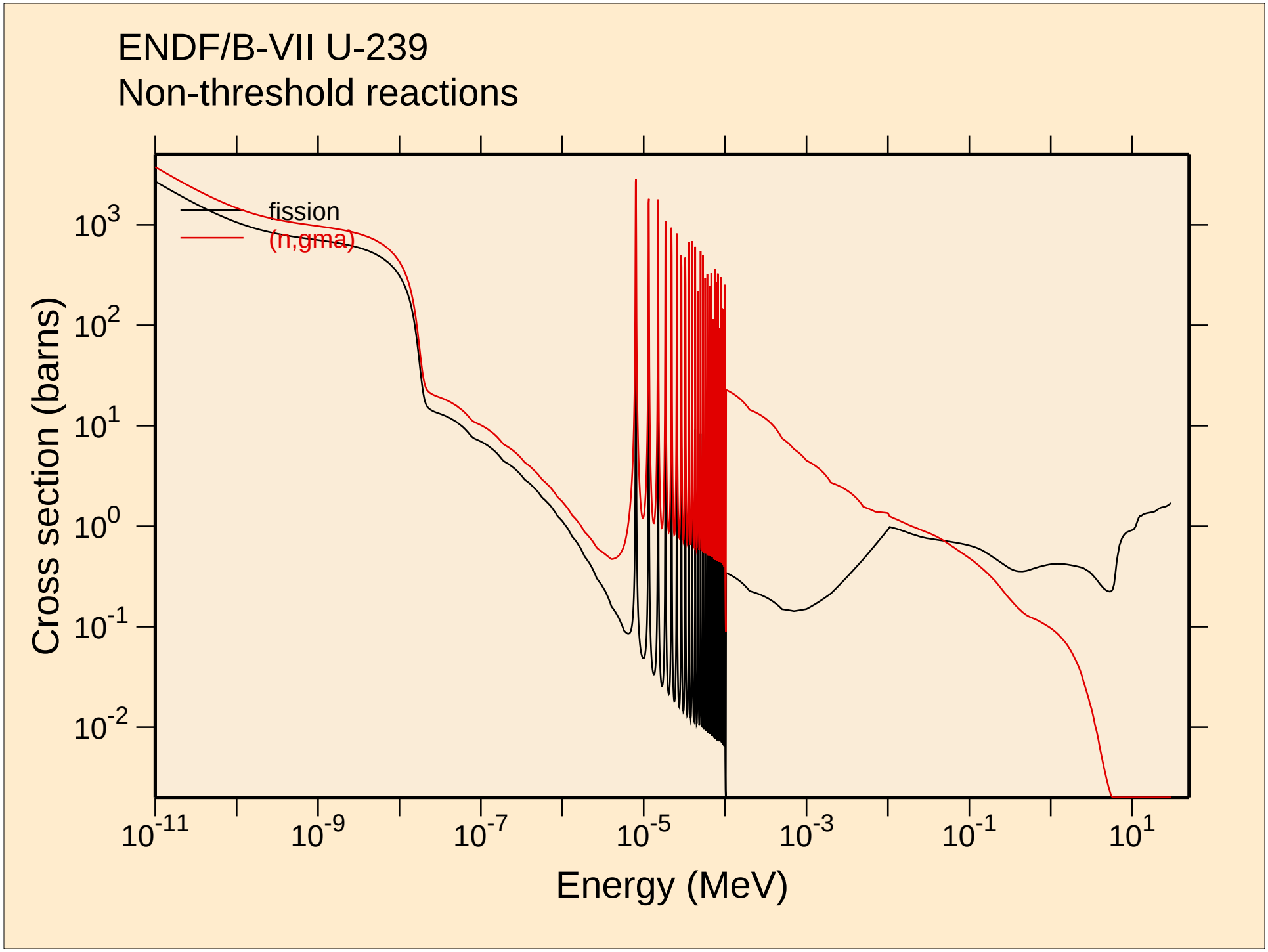
ENDF/B-VII U-239
Non-threshold reactions
fission
(n,gma)
Cross section (barns)
Energy (MeV)
10^3
10^2
10^1
10^0
10^-1
10^-2
10^-11
10^-9
10^-7
10^-5
10^-3
10^-1
10^1

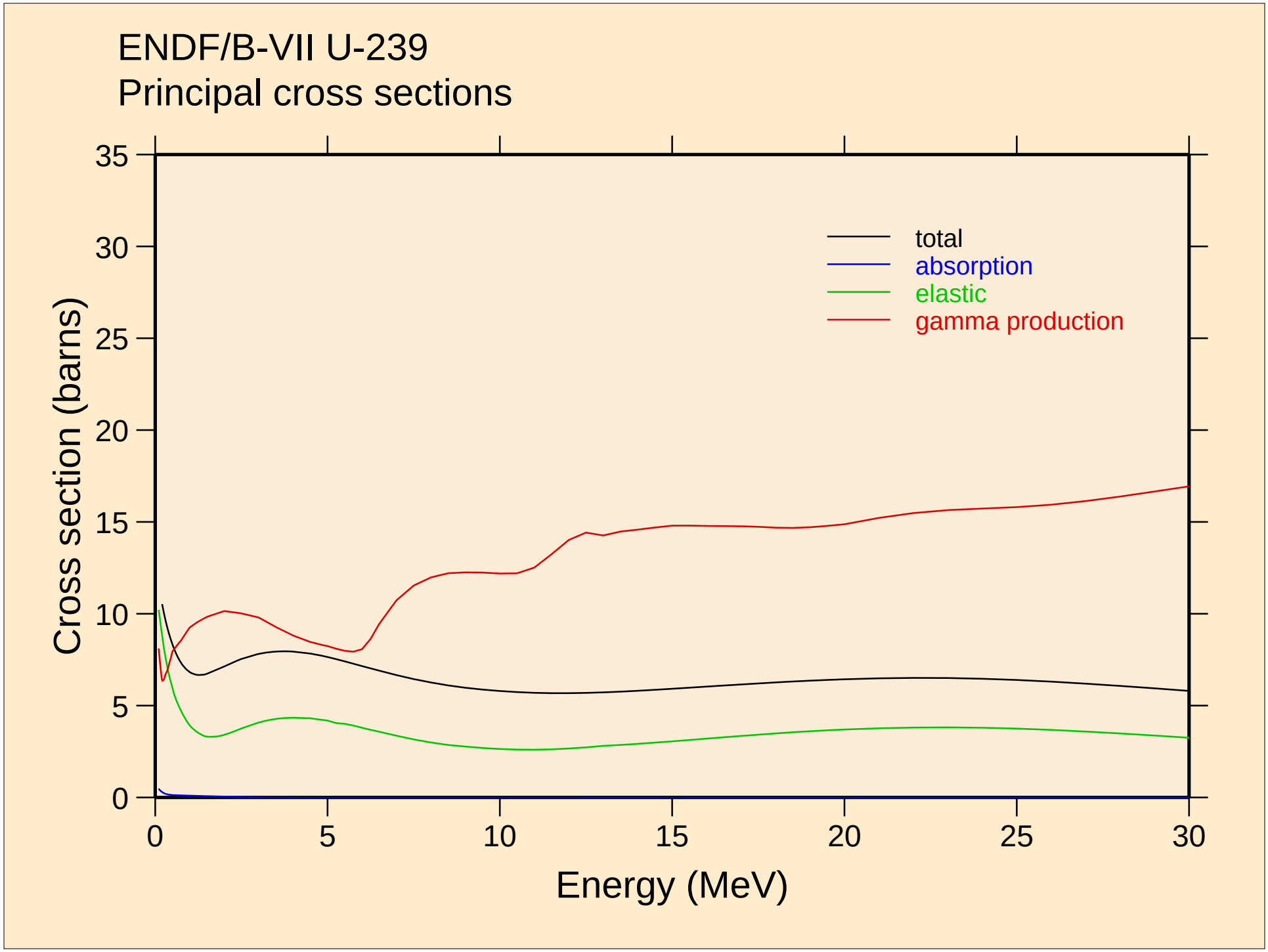
ENDF/B-VII U-239
Principal cross sections
Cross section (barns)
Energy (MeV)
total
absorption
elastic
gamma production
0
5
10
15
20
25
30
35

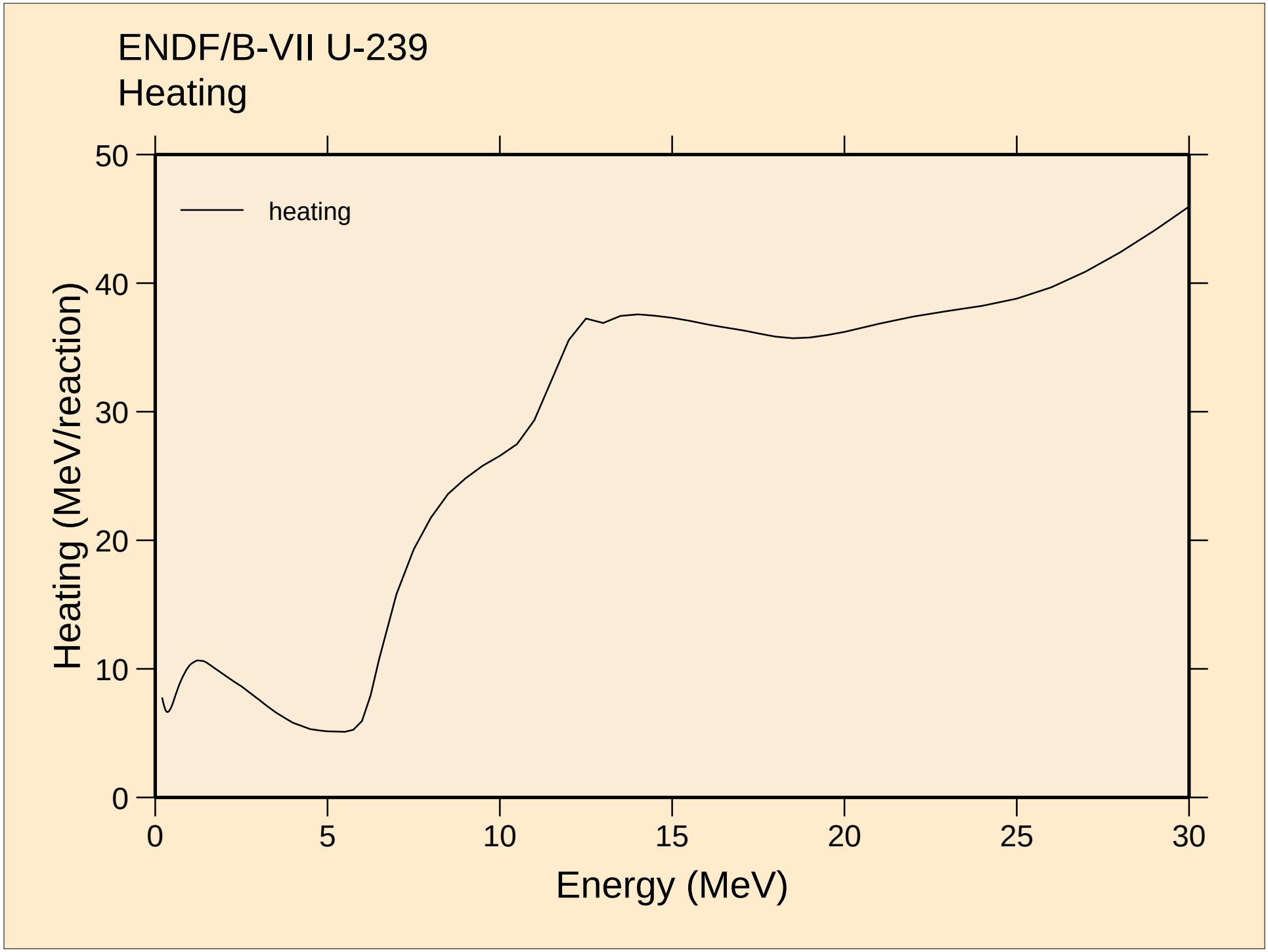
ENDF/B-VII U-239
Heating
heating
Heating (MeV/reaction)
Energy (MeV)
0
10
20
30
40
50
0
5
10
15
20
25
30

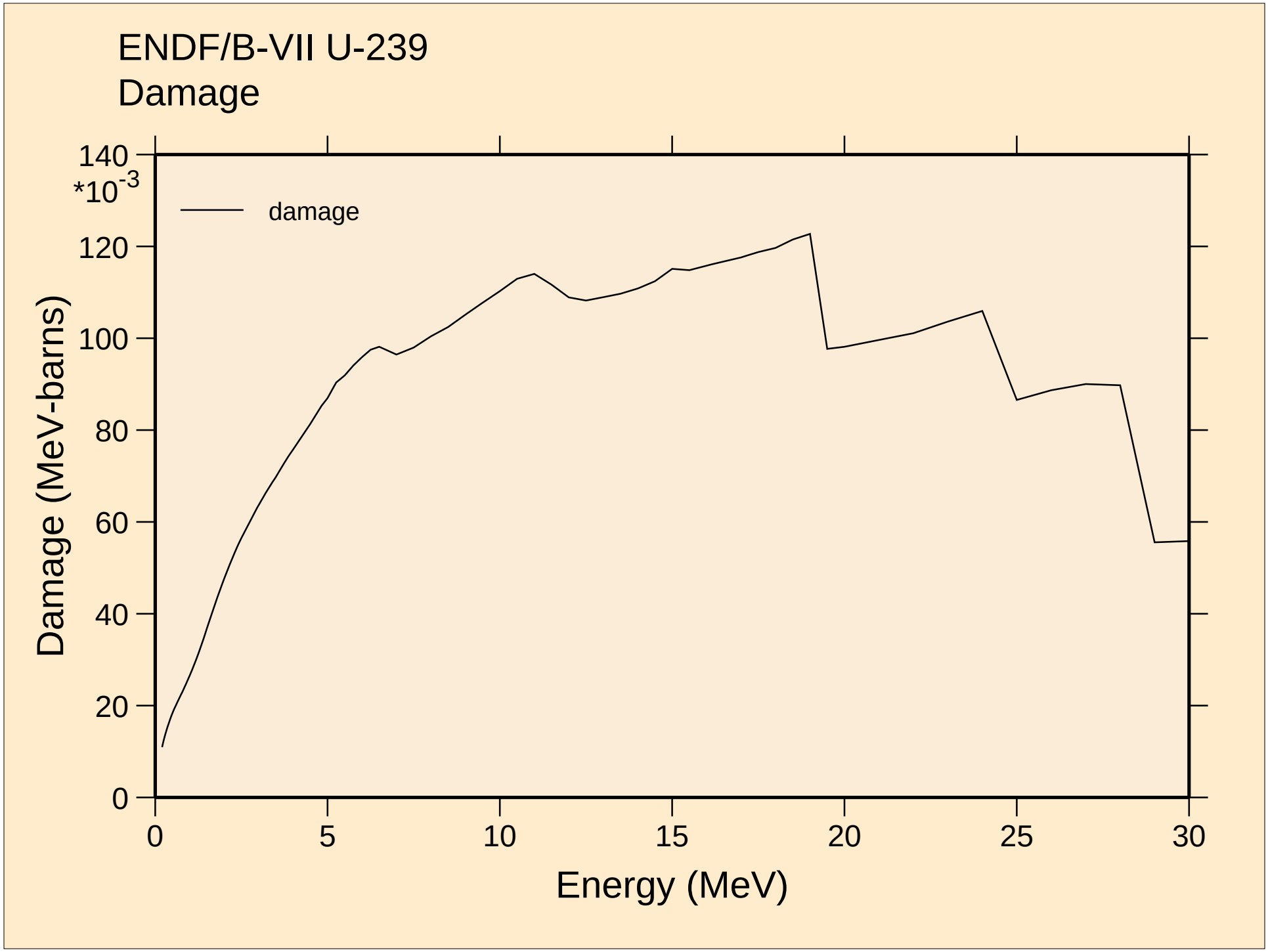
ENDF/B-VII U-239
Damage
damage
*10^-3
140
120
100
80
60
40
20
0
Damage (MeV-barns)
0
5
10
15
20
25
30
Energy (MeV)

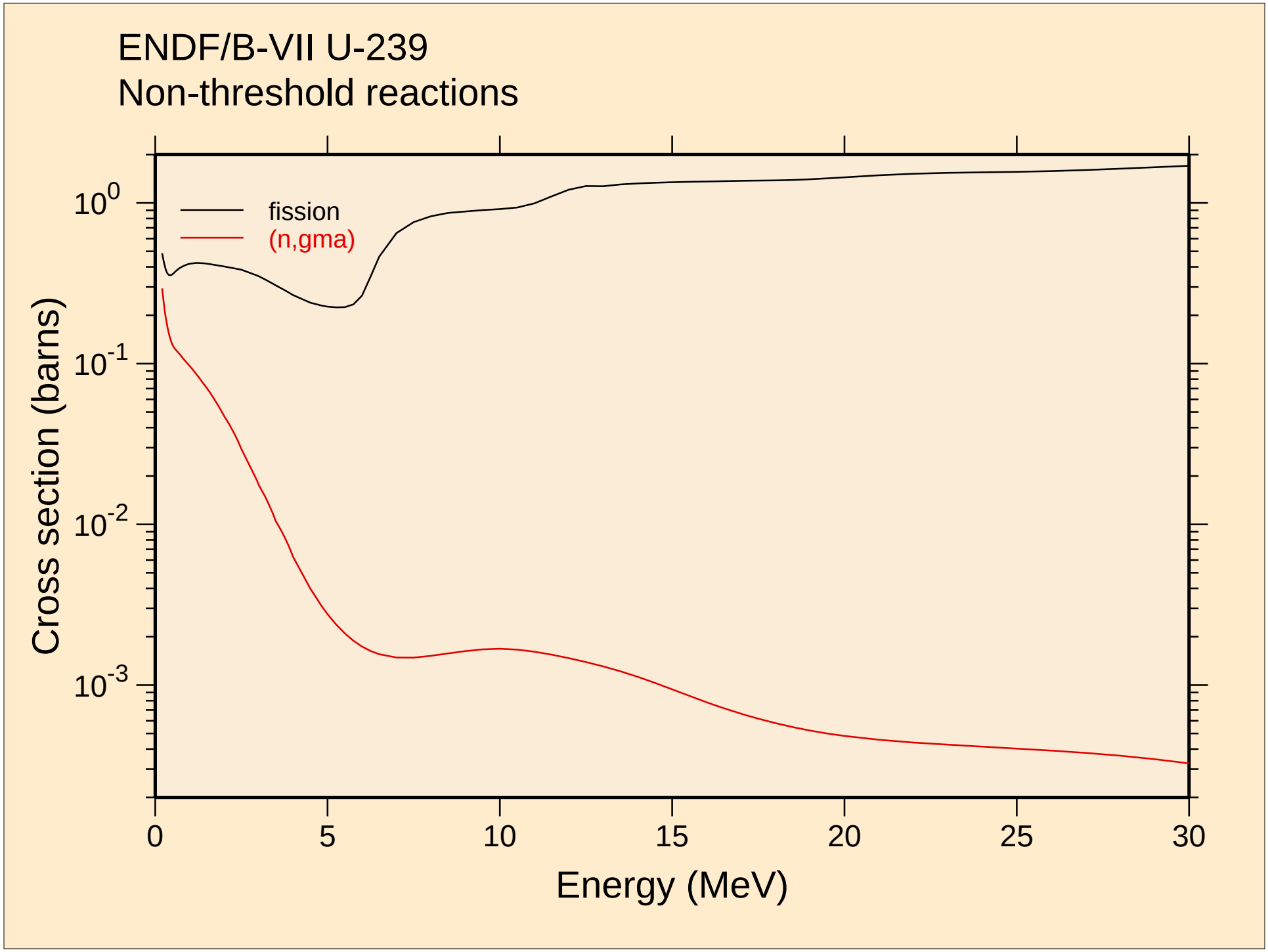
ENDF/B-VII U-239
Non-threshold reactions
fission
(n,gma)
Cross section (barns)
10^{0}
10^{-1}
10^{-2}
10^{-3}
0
5
10
15
20
25
30
Energy (MeV)

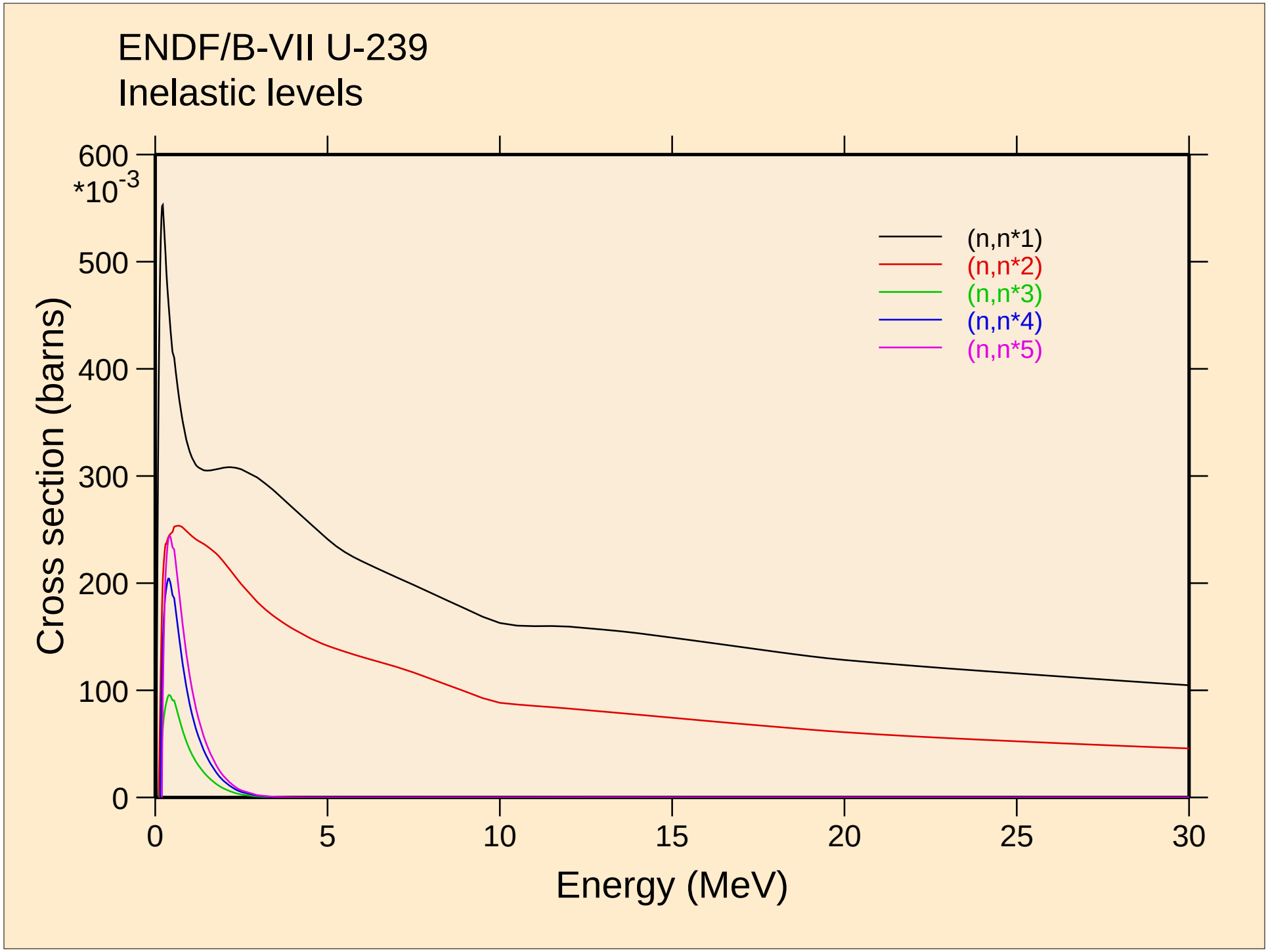
ENDF/B-VII U-239
Inelastic levels
600
*10-3
500
400
300
200
100
0
Cross section (barns)
0
5
10
15
20
25
30
Energy (MeV)
(n,n*1)
(n,n*2)
(n,n*3)
(n,n*4)
(n,n*5)

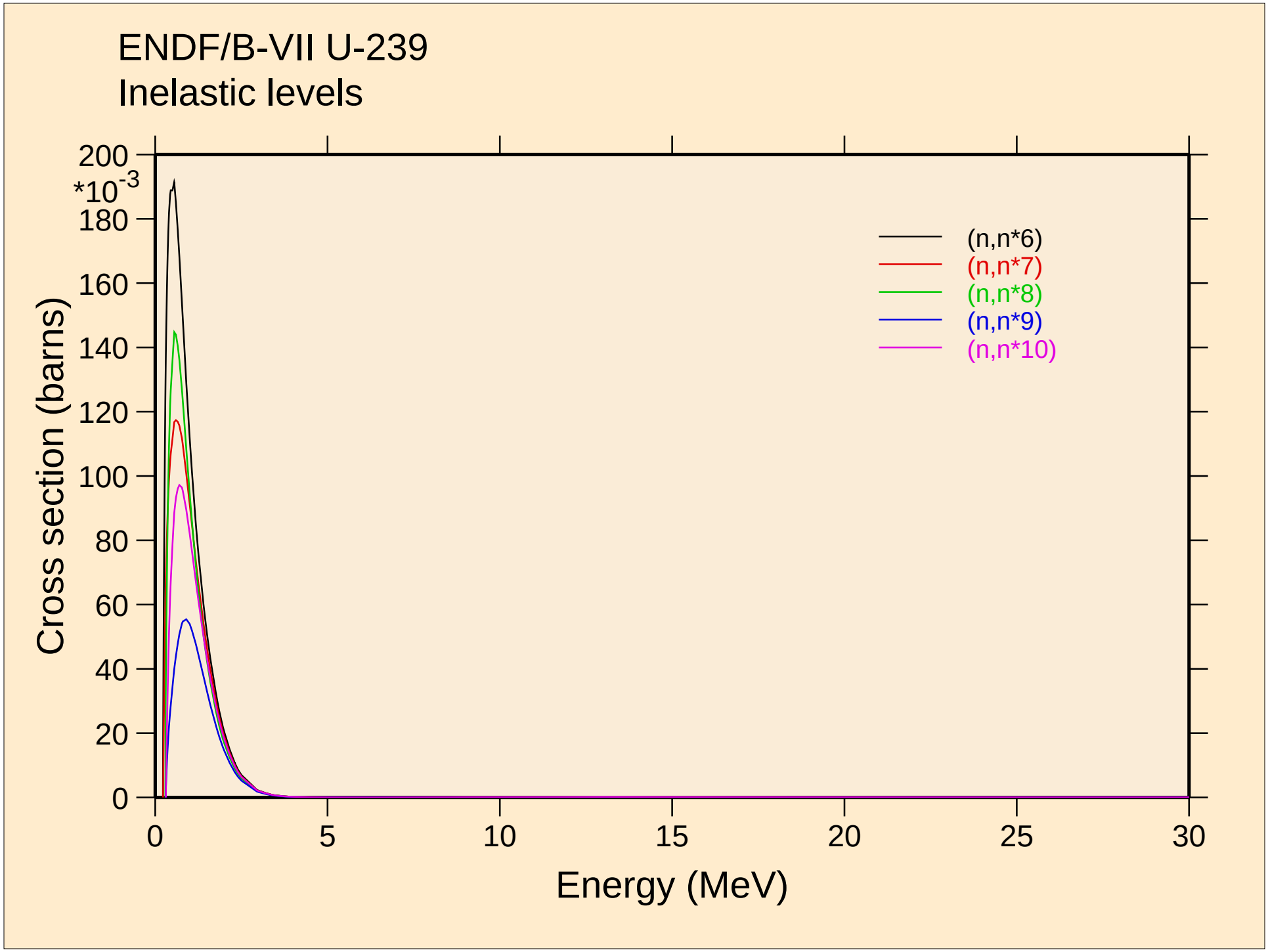
ENDF/B-VII U-239
Inelastic levels
Cross section (barns)
*10^-3
200
180
160
140
120
100
80
60
40
20
0
0
5
10
15
20
25
30
Energy (MeV)
(n,n*6)
(n,n*7)
(n,n*8)
(n,n*9)
(n,n*10)

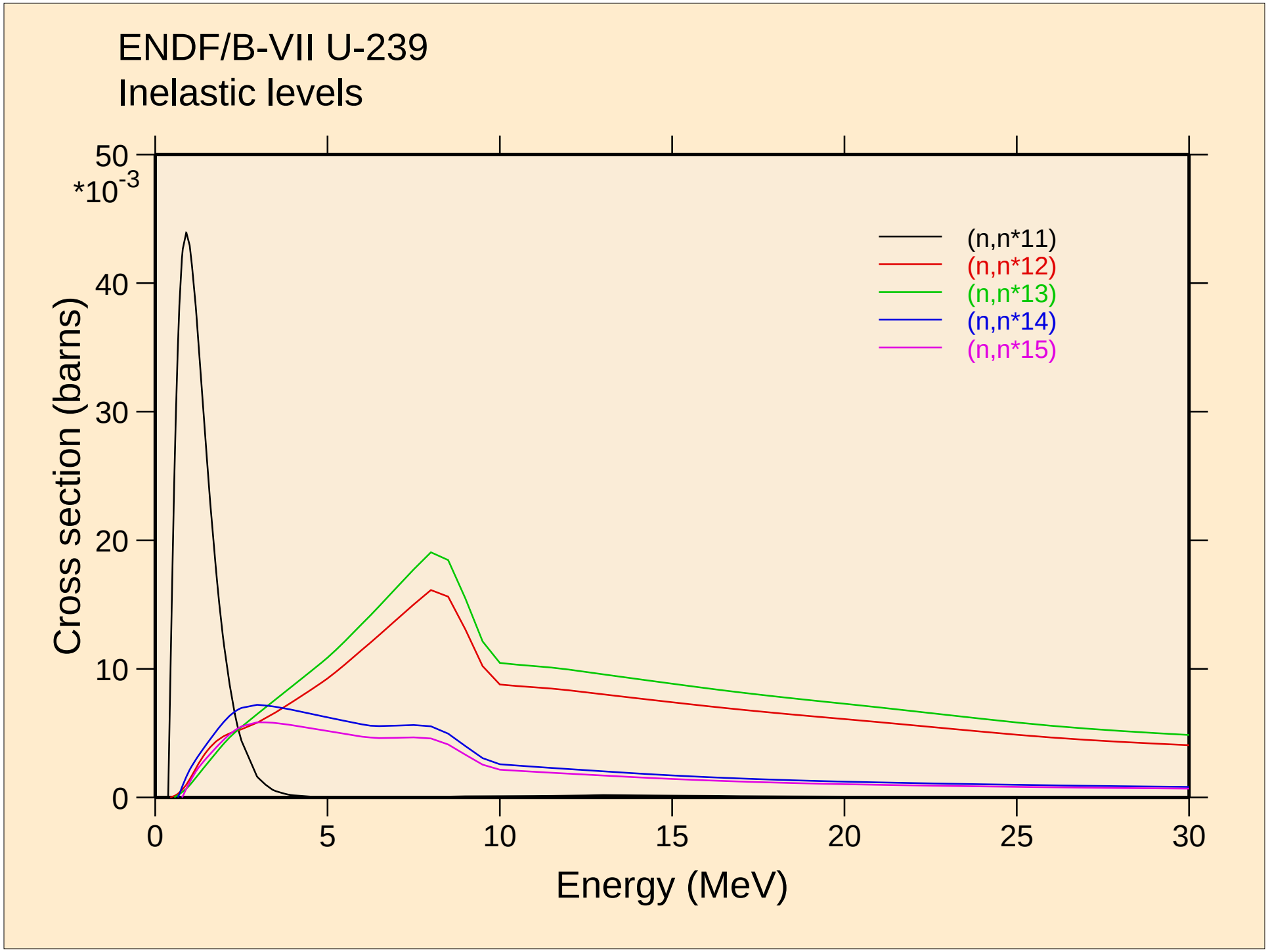
ENDF/B-VII U-239
Inelastic levels
Cross section (barns)
*10^-3
50
40
30
20
10
0
0
5
10
15
20
25
30
Energy (MeV)
(n,n*11)
(n,n*12)
(n,n*13)
(n,n*14)
(n,n*15)

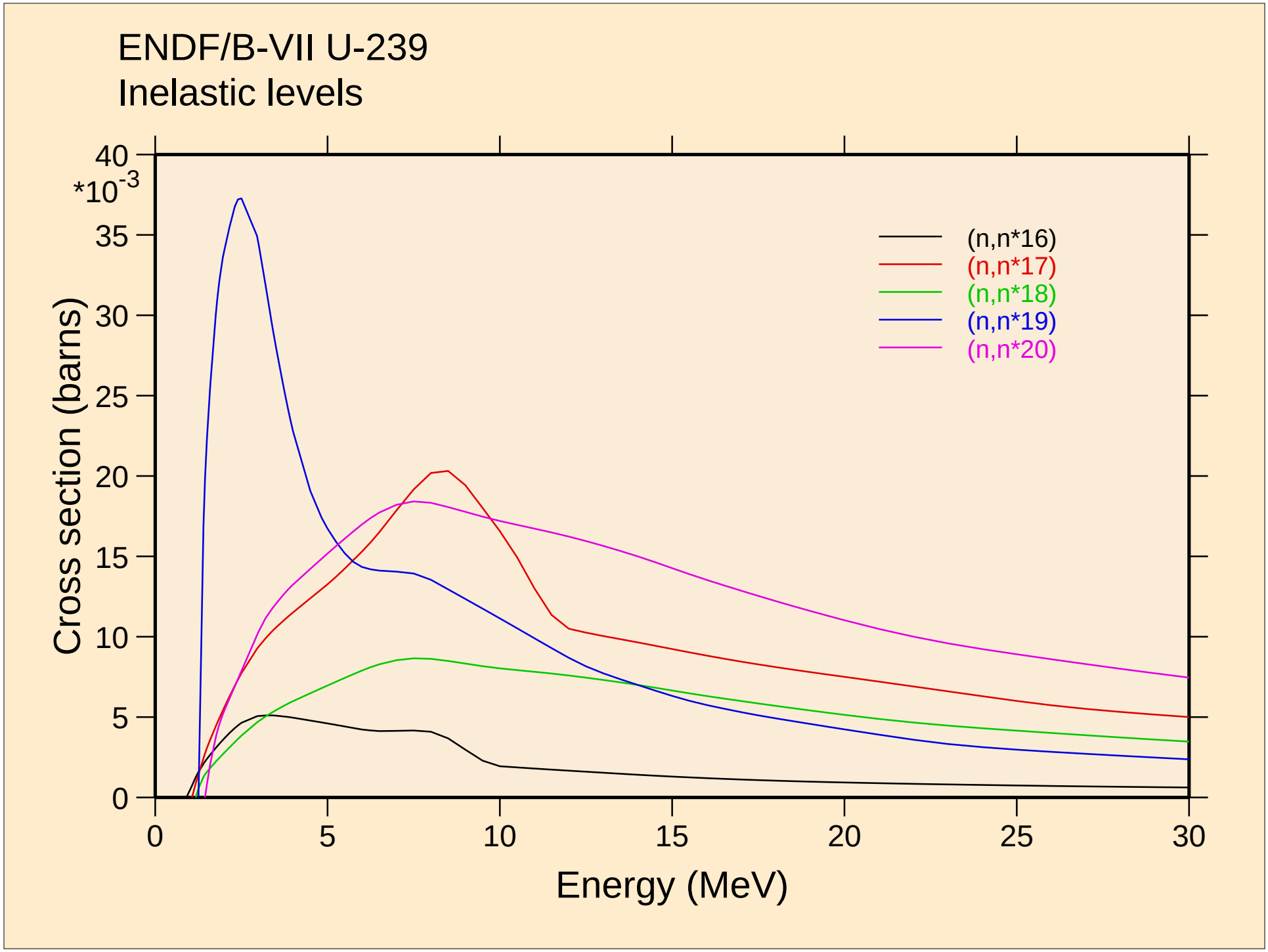
ENDF/B-VII U-239
Inelastic levels
Cross section (barns)
*10^-3
40
35
30
25
20
15
10
5
0
0
5
10
15
20
25
30
Energy (MeV)
(n,n*16)
(n,n*17)
(n,n*18)
(n,n*19)
(n,n*20)

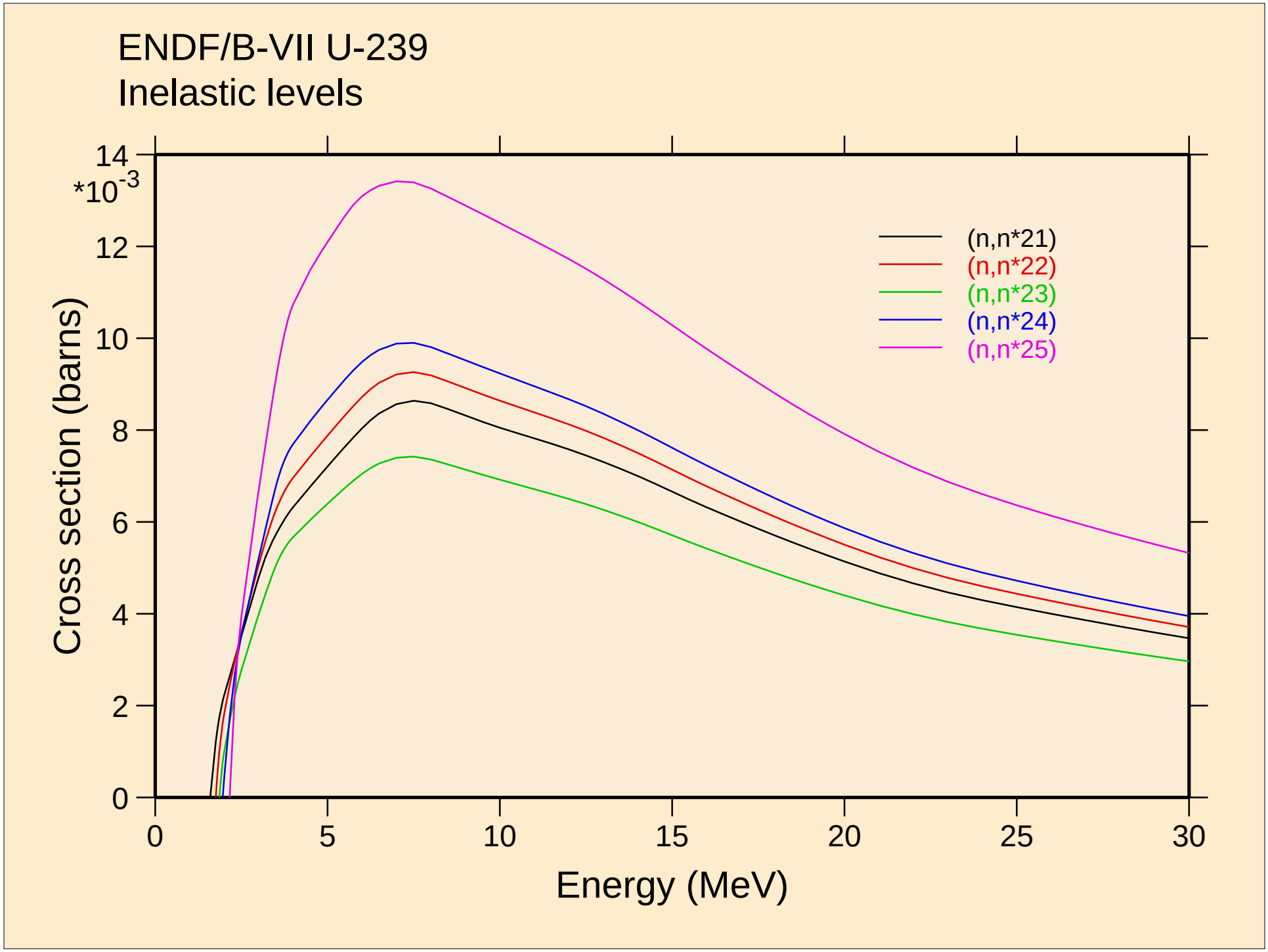
ENDF/B-VII U-239
Inelastic levels
Cross section (barns)
*10^-3
14
12
10
8
6
4
2
0
0
5
10
15
20
25
30
Energy (MeV)
(n,n*21)
(n,n*22)
(n,n*23)
(n,n*24)
(n,n*25)

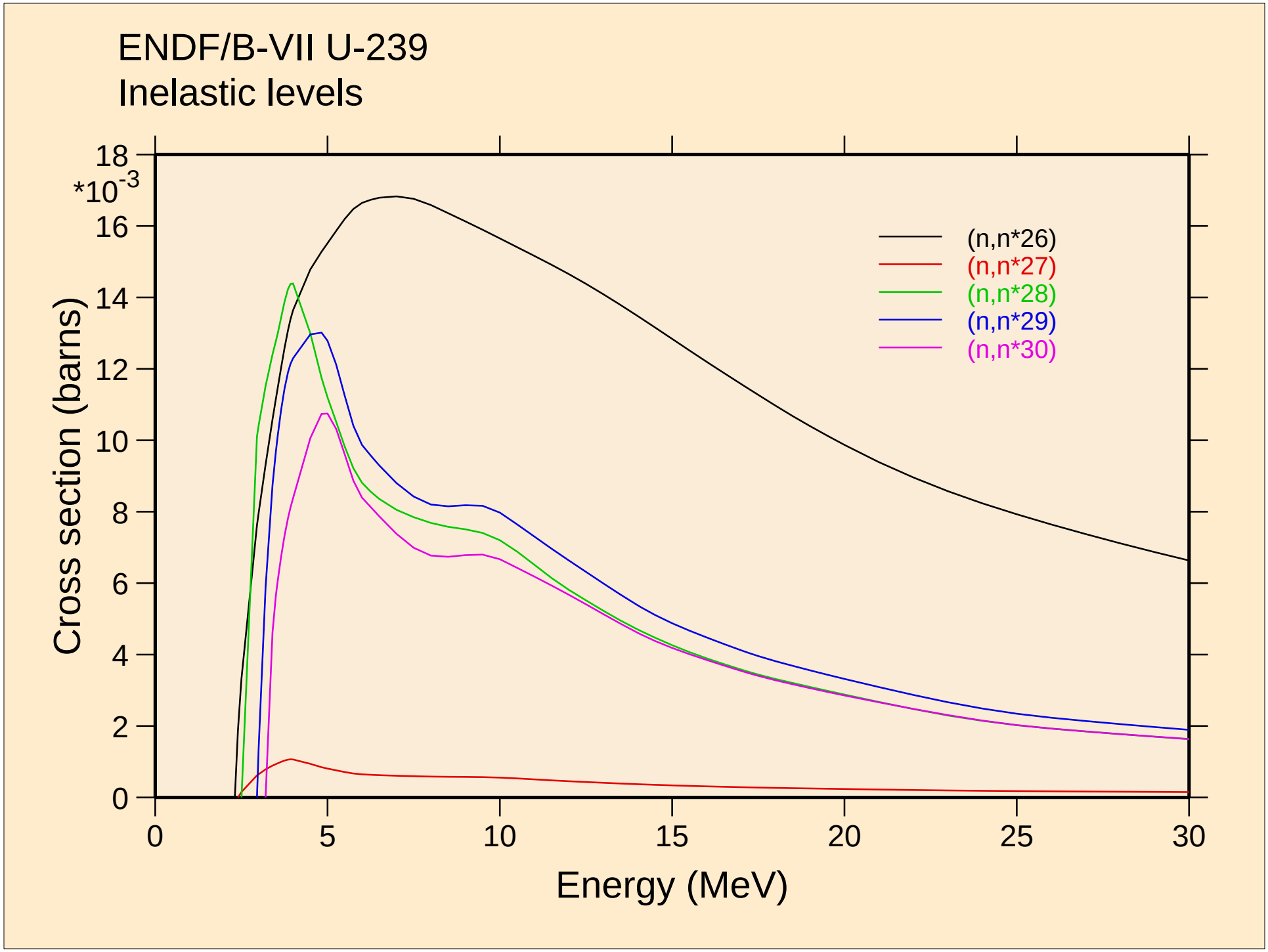
ENDF/B-VII U-239
Inelastic levels
*10^-3
18
16
14
12
10
8
6
4
2
0
Cross section (barns)
0
5
10
15
20
25
30
Energy (MeV)
(n,n*26)
(n,n*27)
(n,n*28)
(n,n*29)
(n,n*30)

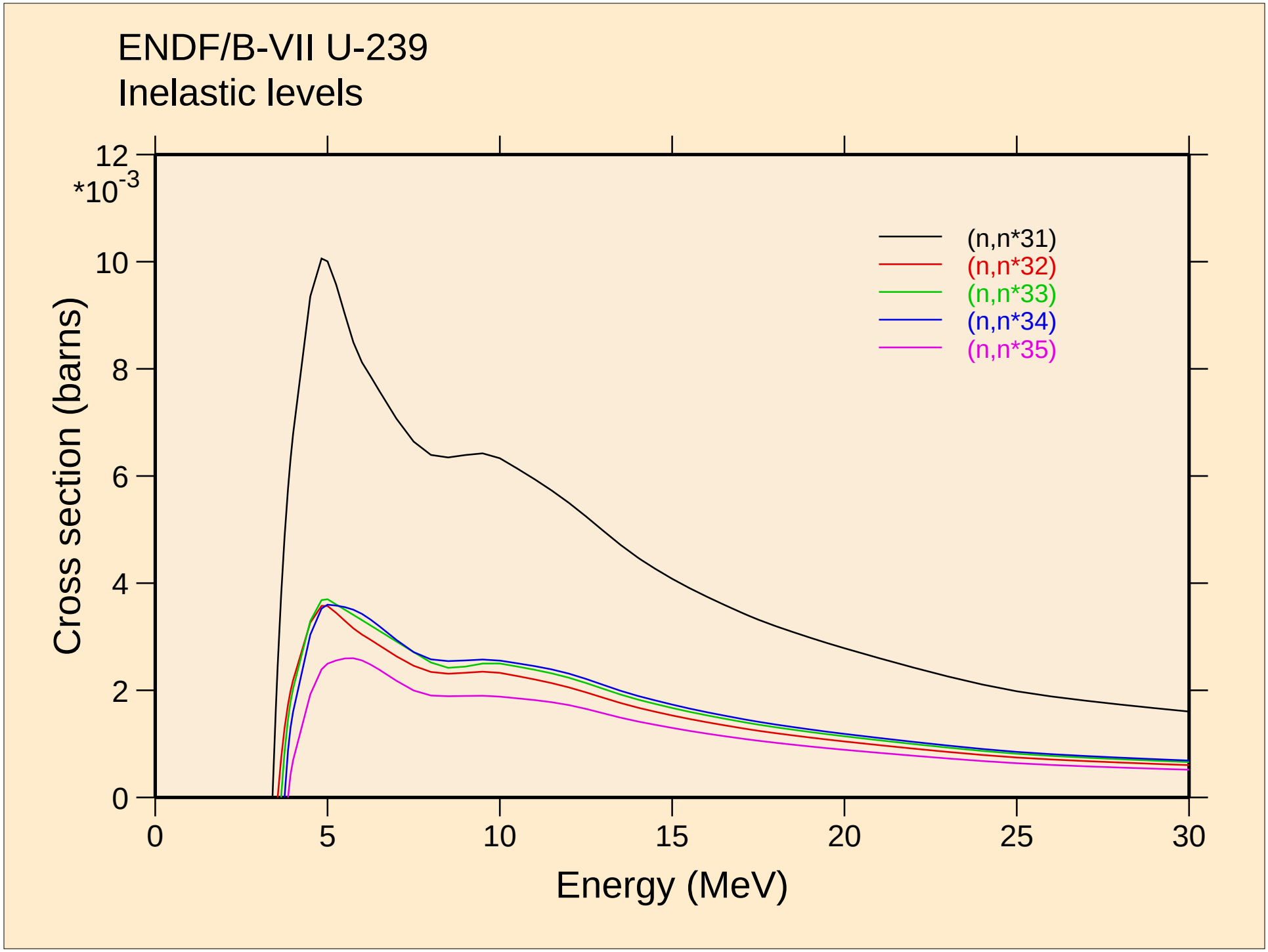
ENDF/B-VII U-239
Inelastic levels
Cross section (barns)
*10^-3
12
10
8
6
4
2
0
0
5
10
15
20
25
30
Energy (MeV)
(n,n*31)
(n,n*32)
(n,n*33)
(n,n*34)
(n,n*35)

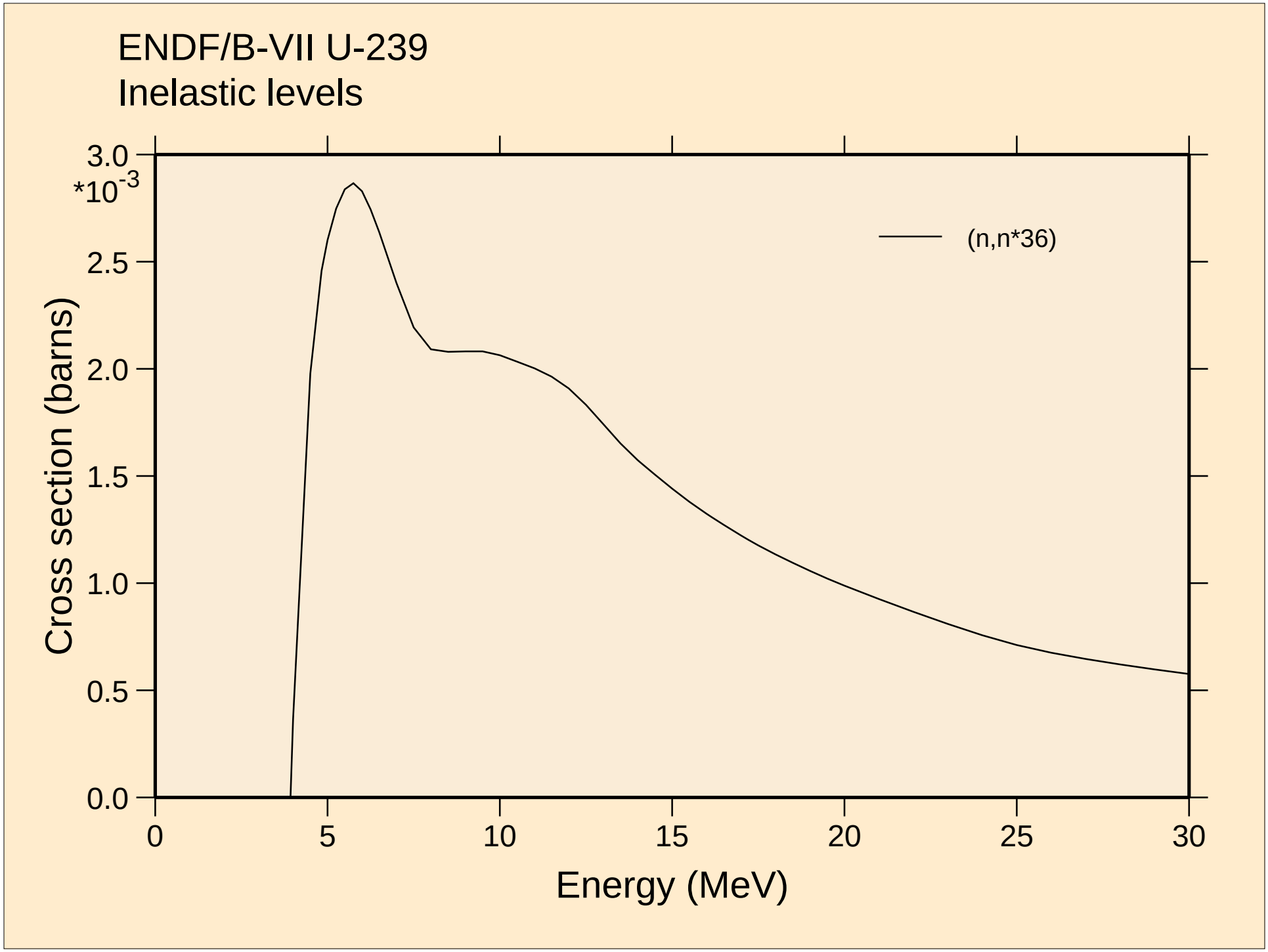
ENDF/B-VII U-239
Inelastic levels
3.0
*10-3
2.5
2.0
1.5
1.0
0.5
0.0
Cross section (barns)
(n,n*36)
0
5
10
15
20
25
30
Energy (MeV)

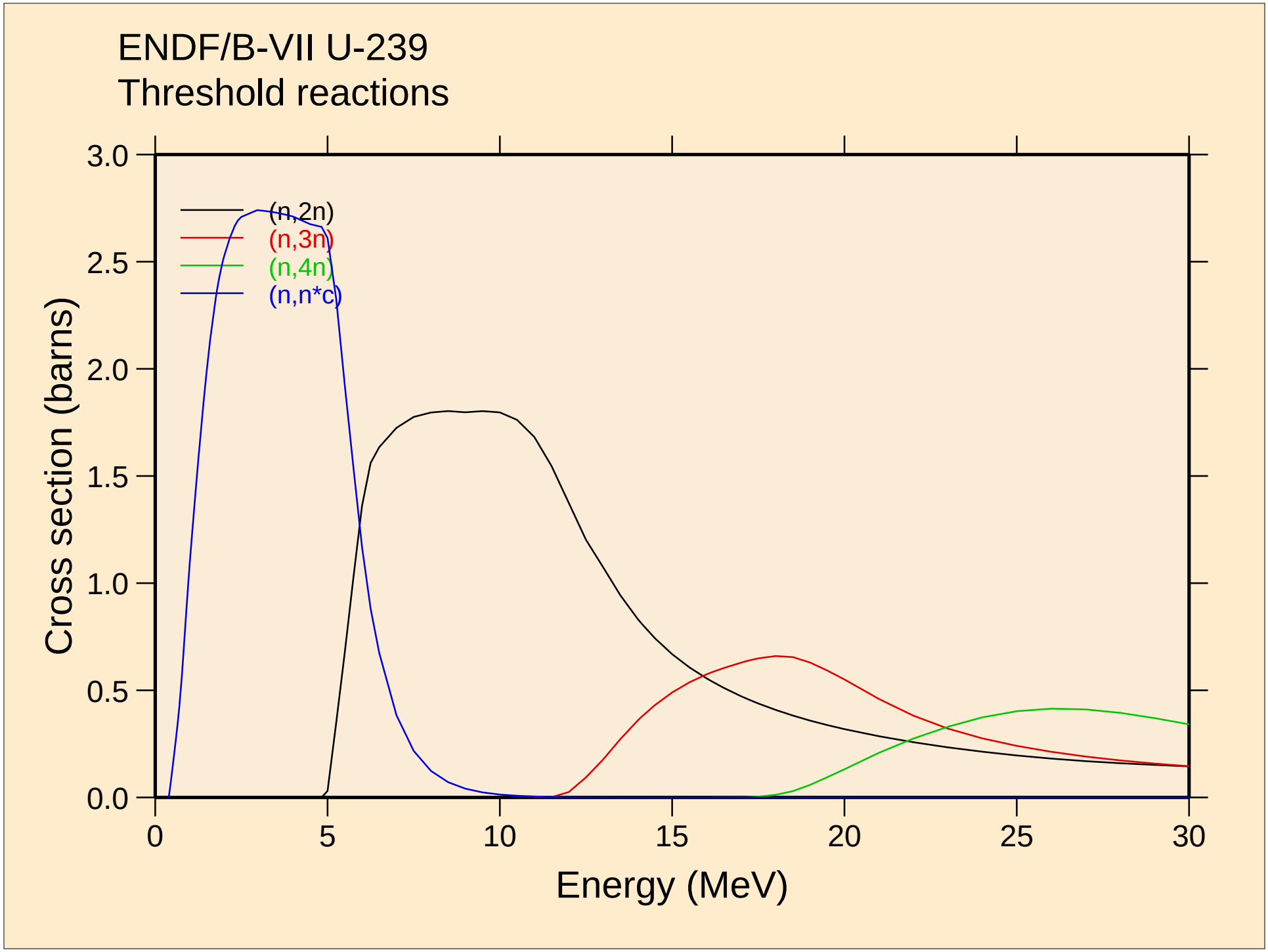
ENDF/B-VII U-239
Threshold reactions
(n,2n)
(n,3n)
(n,4n)
(n,n*c)
Cross section (barns)
Energy (MeV)
0.0
0.5
1.0
1.5
2.0
2.5
3.0
0
5
10
15
20
25
30

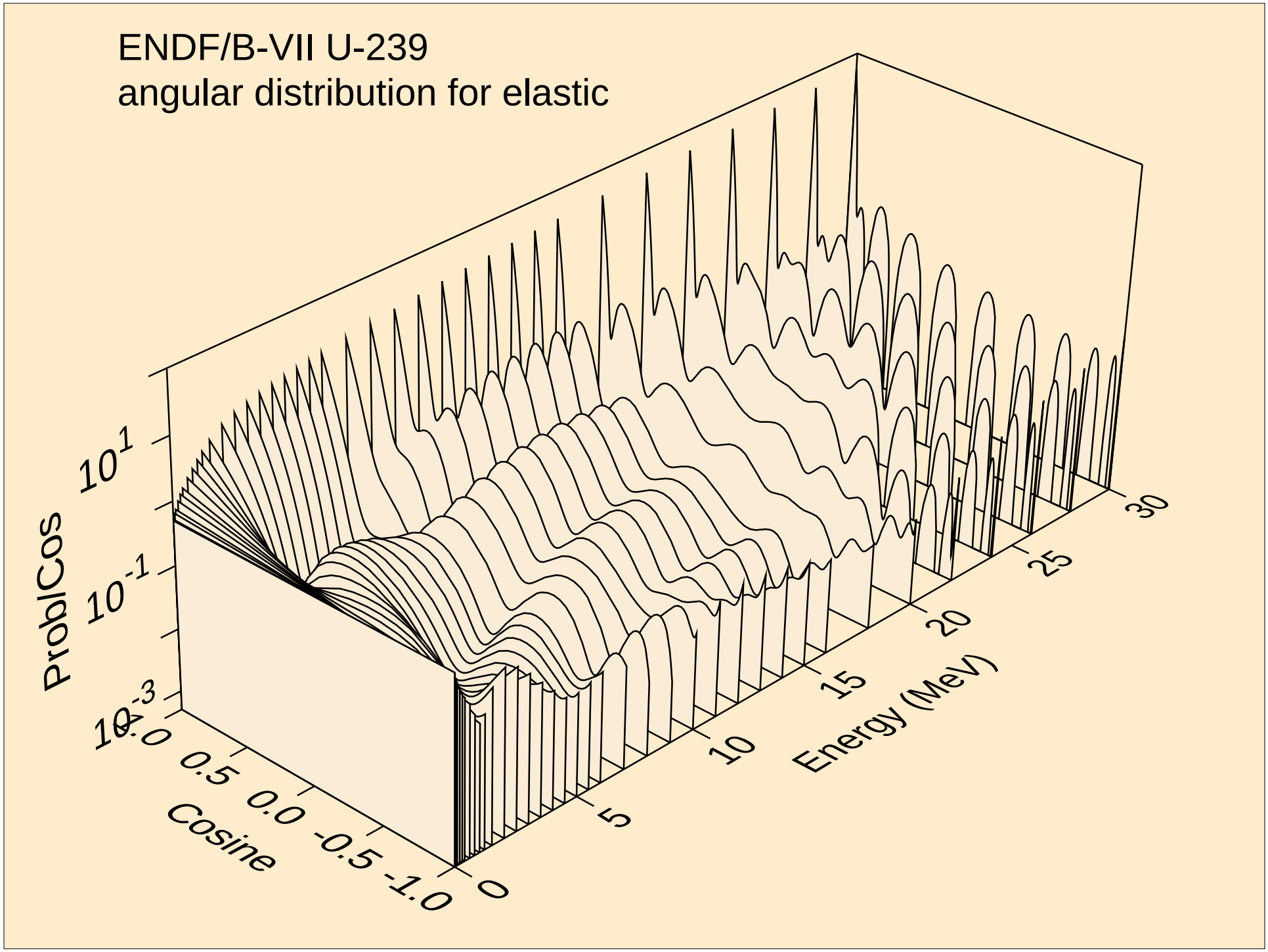
ENDF/B-VII U-239
angular distribution for elastic
ProbCos
10^{1}
10^{-1}
10^{-3}
1.0
0.5
0.0
-0.5
-1.0
Cosine
0
5
10
15
20
25
30
Energy (MeV)

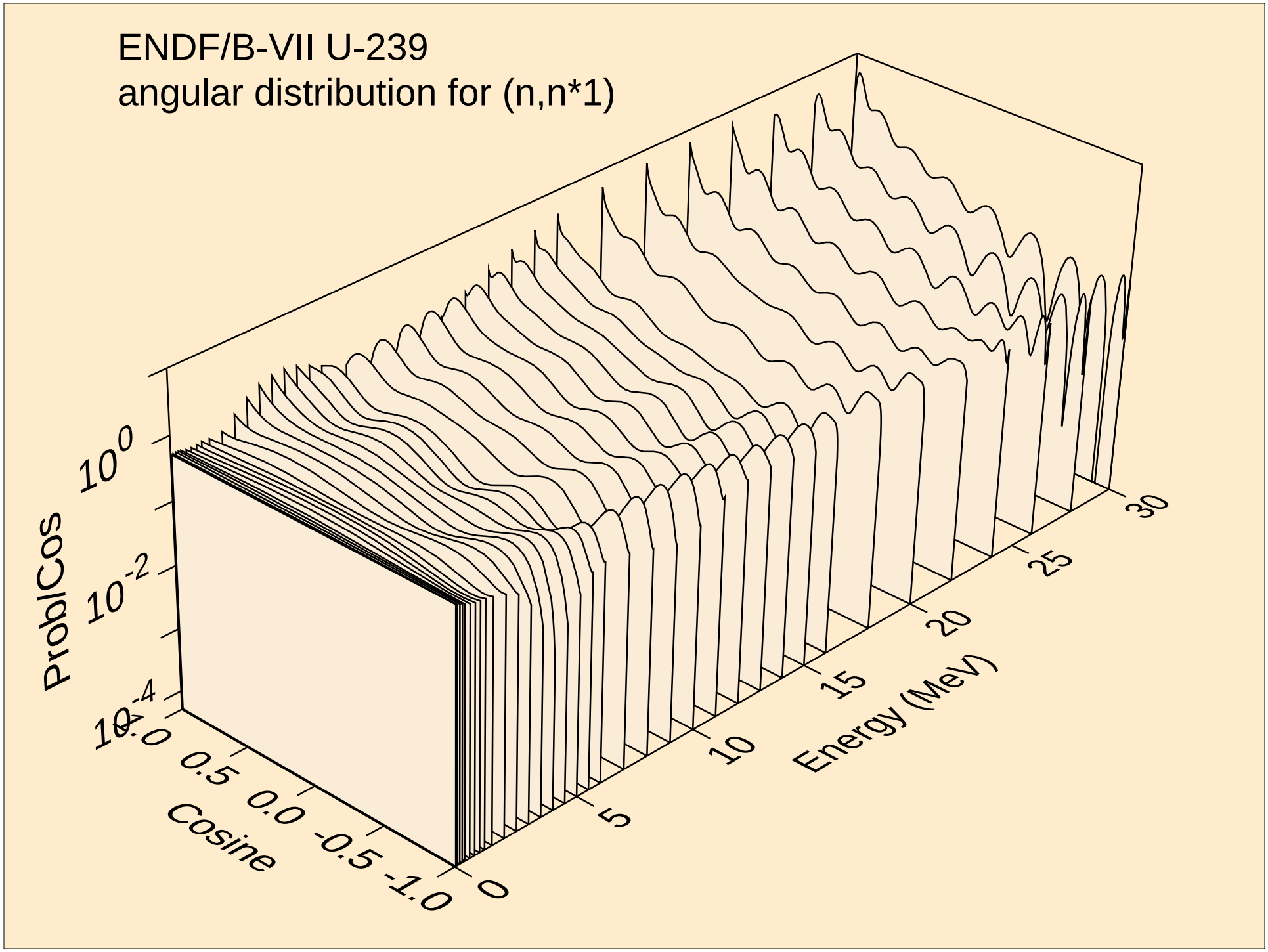
ENDF/B-VII U-239
angular distribution for (n,n*1)
ProbCos
10^{0}
10^{-2}
10^{-4}
1.0
0.5
0.0
-0.5
-1.0
Cosine
0
5
10
15
20
25
30
Energy (MeV)

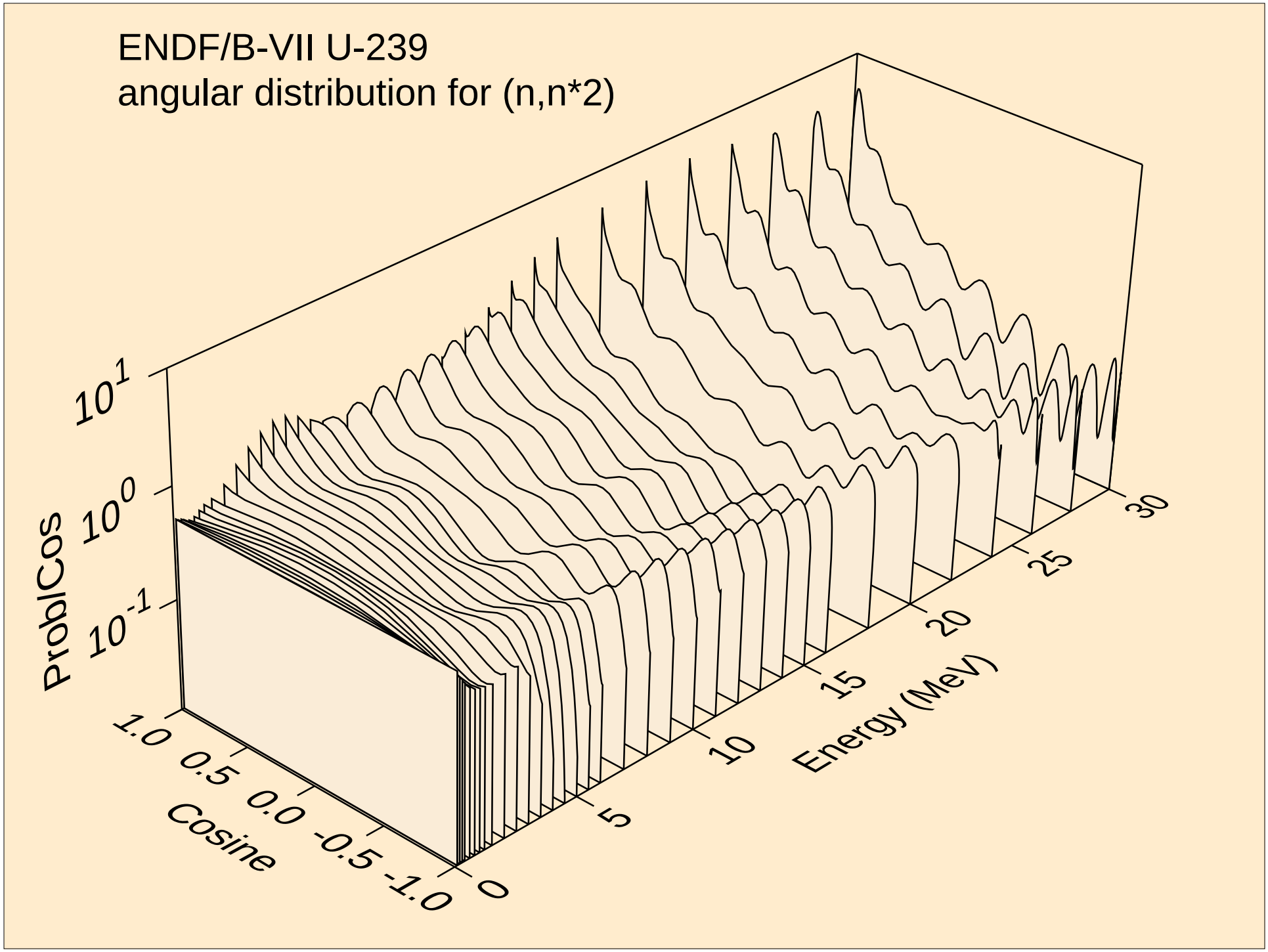
ENDF/B-VII U-239
angular distribution for (n,n*2)
ProbCos
10^{1}
10^{0}
10^{-1}
Cosine
1.0
0.5
0.0
-0.5
-1.0
Energy (MeV)
0
5
10
15
20
25
30

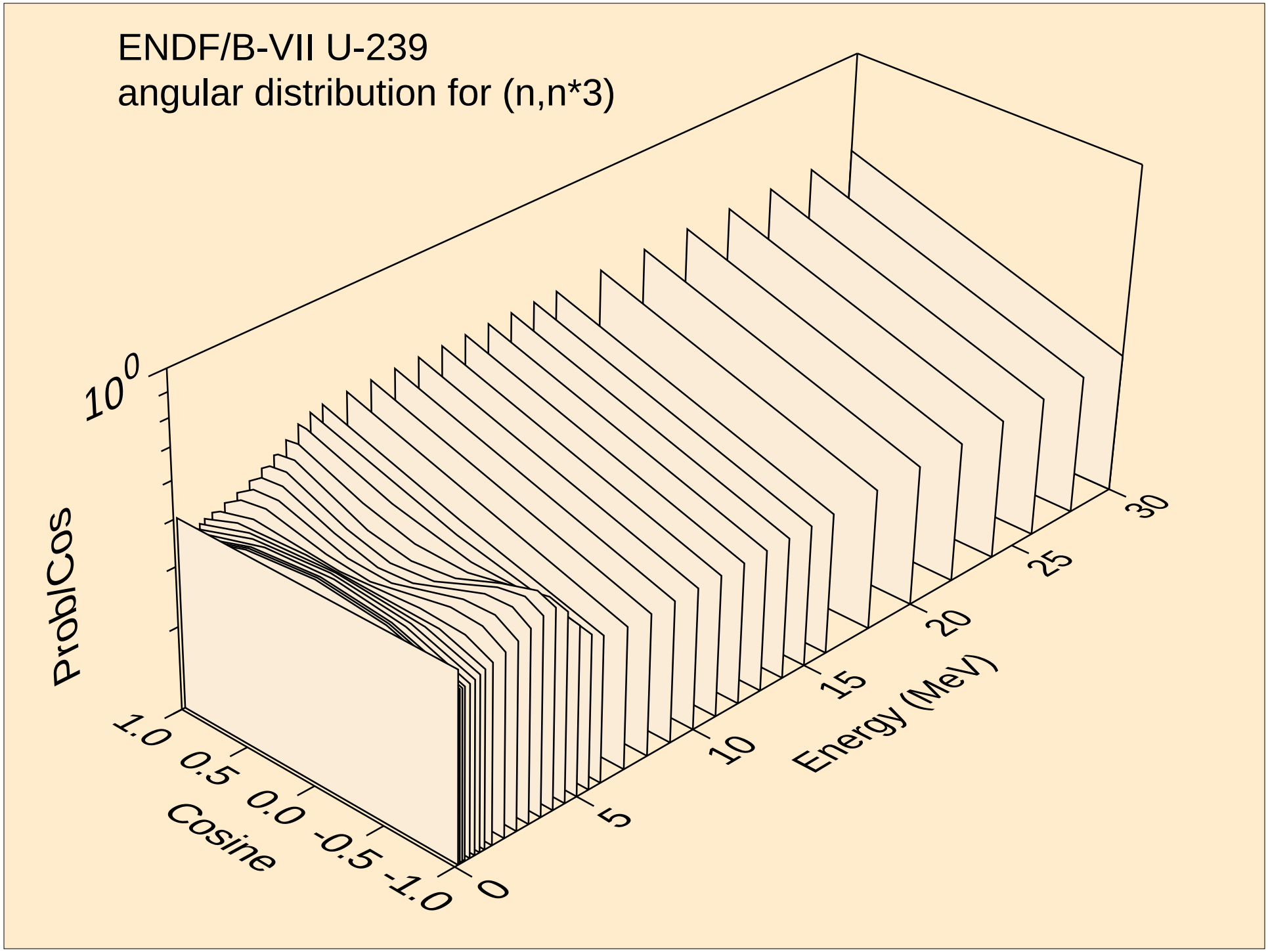
ENDF/B-VII U-239
angular distribution for (n,n*3)
10^0
ProbCos
1.0
0.5
0.0
-0.5
-1.0
Cosine
0
5
10
15
20
25
30
Energy (MeV)

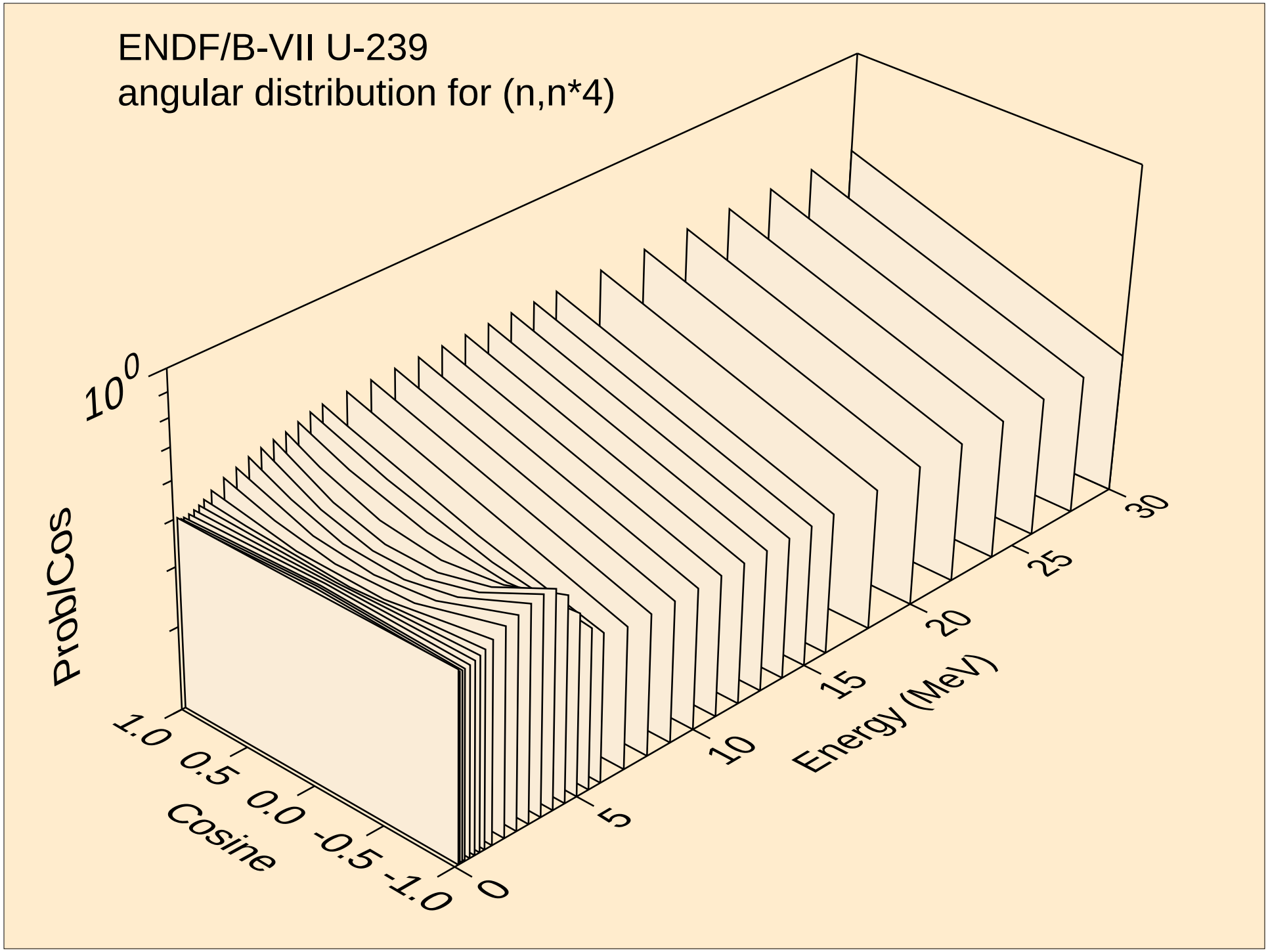
ENDF/B-VII U-239
angular distribution for (n,n*4)
10^0
ProbCos
1.0
0.5
0.0
-0.5
-1.0
Cosine
0
5
10
15
20
25
30
Energy (MeV)

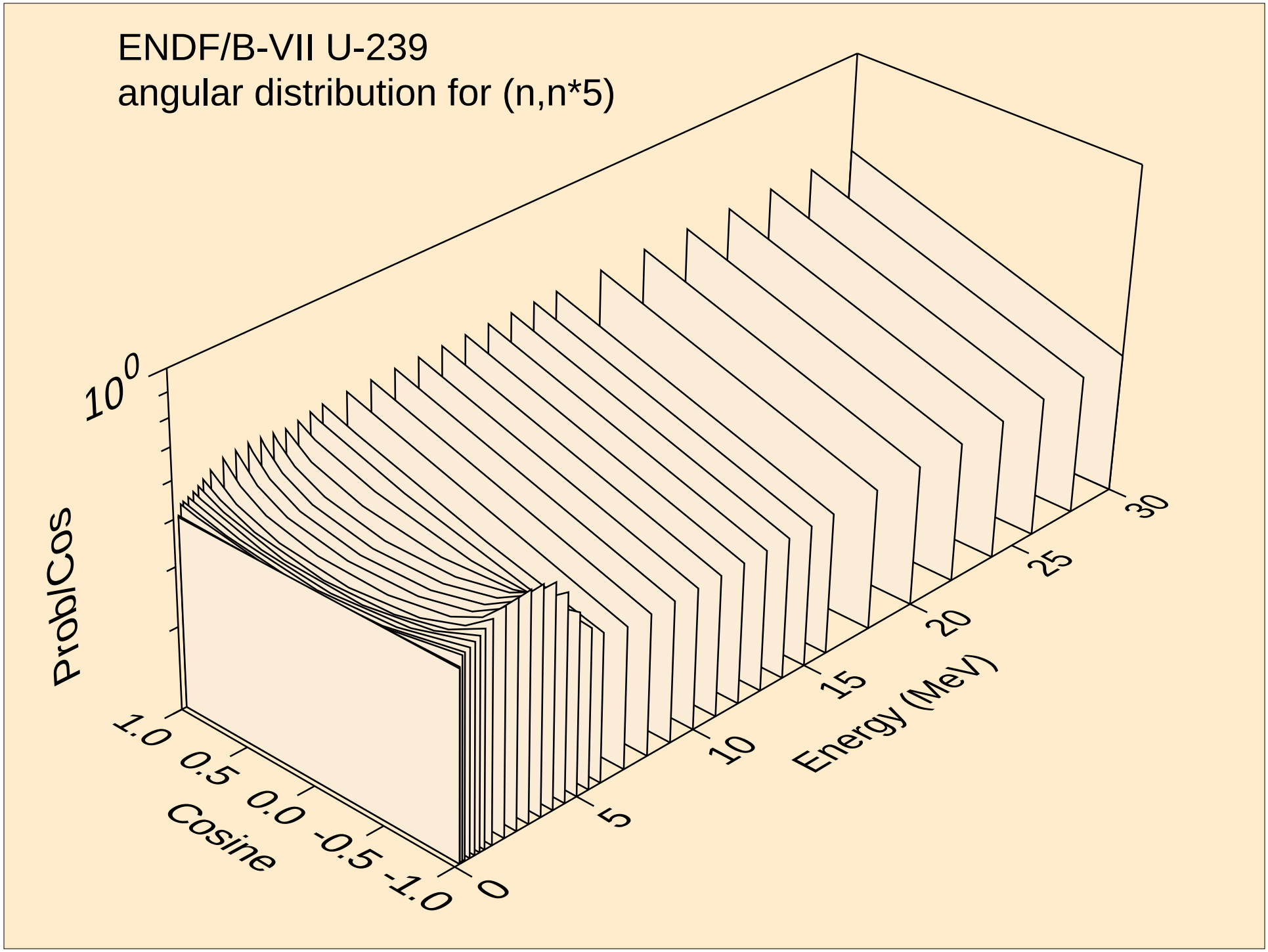
ENDF/B-VII U-239
angular distribution for (n,n*5)
10^0
ProbCos
1.0
0.5
0.0
-0.5
-1.0
Cosine
0
5
10
15
20
25
30
Energy (MeV)

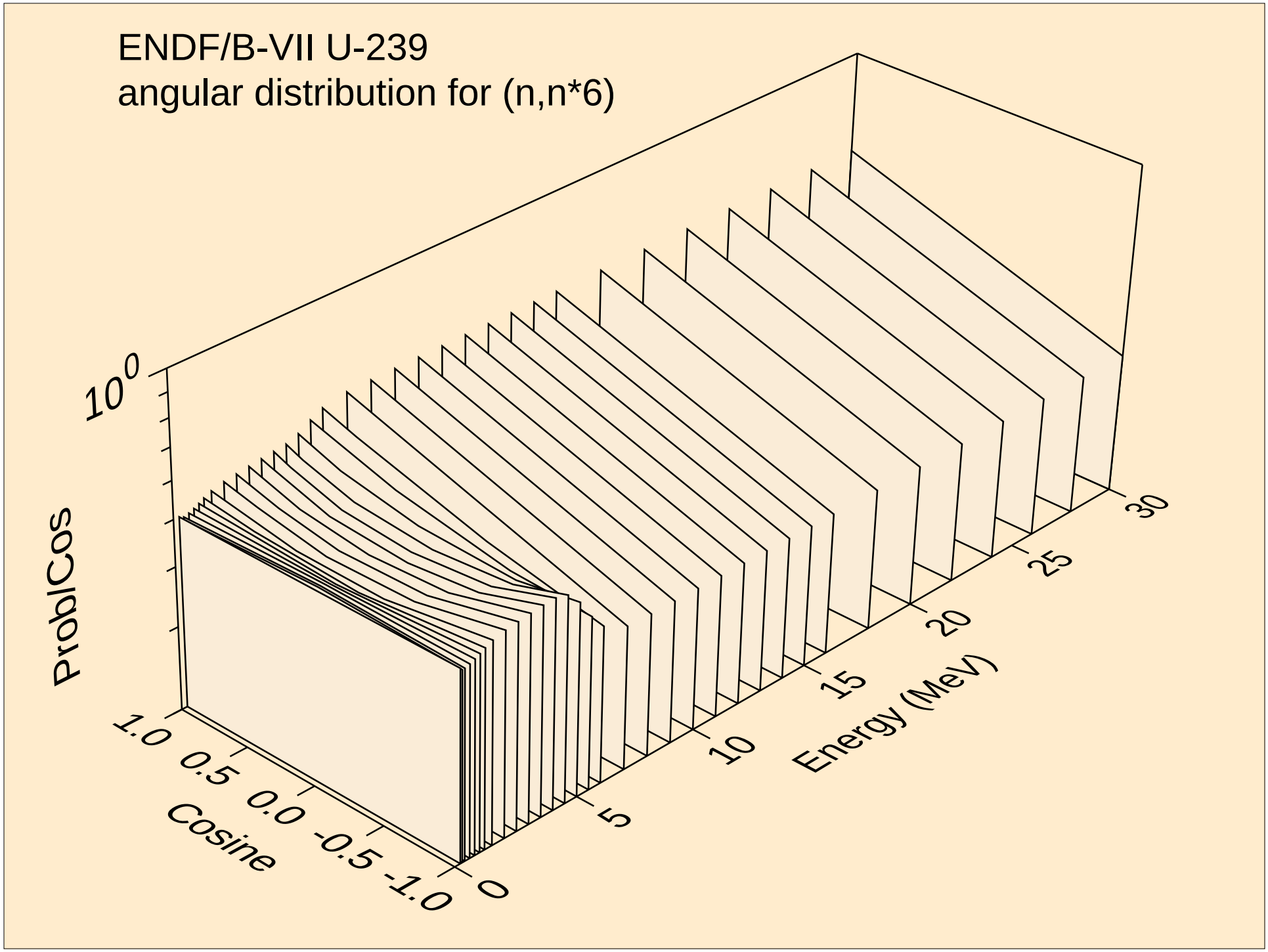
ENDF/B-VII U-239
angular distribution for (n,n*6)
10^0
ProbCos
1.0
0.5
0.0
-0.5
-1.0
Cosine
0
5
10
15
20
25
30
Energy (MeV)

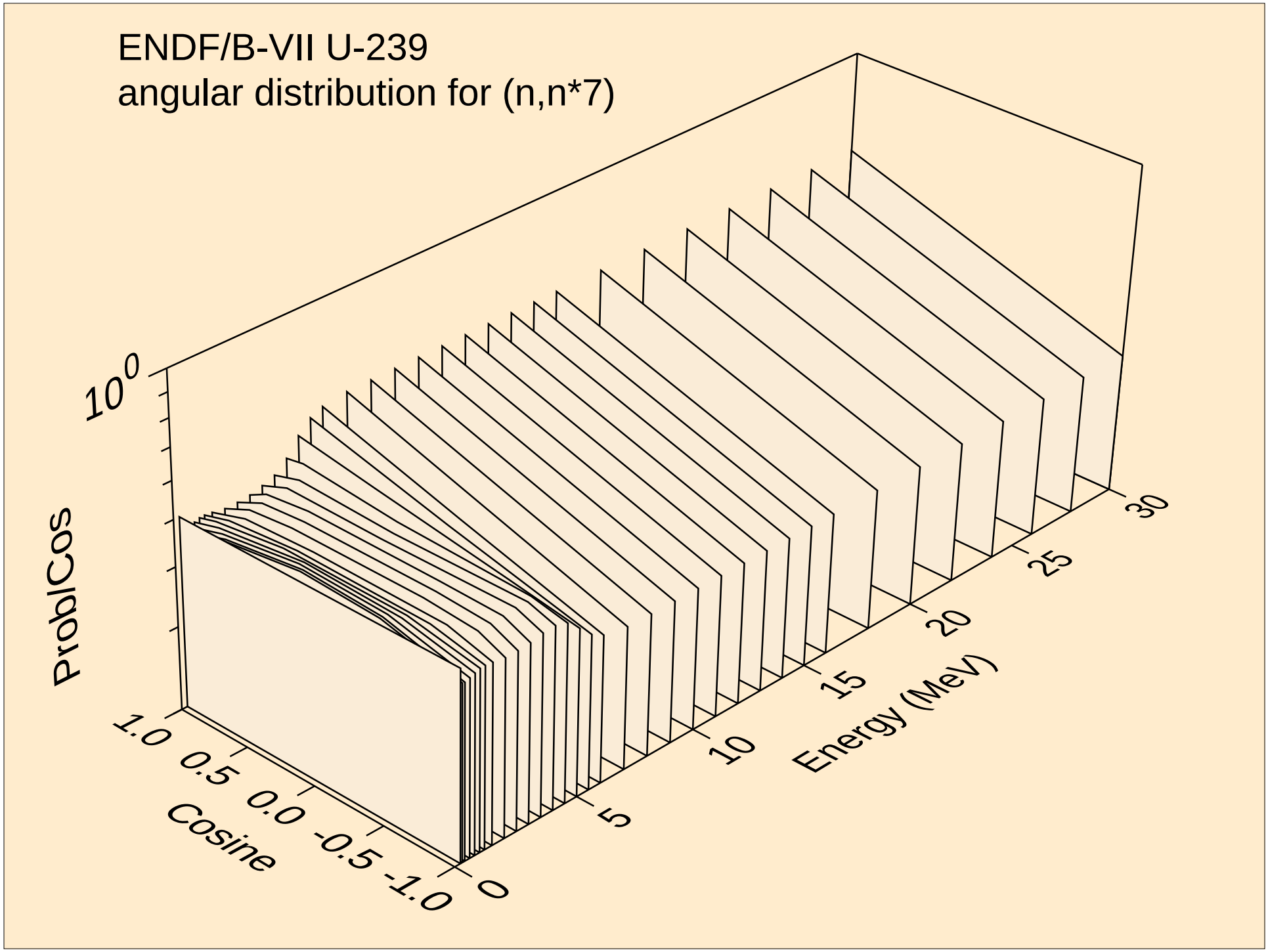
ENDF/B-VII U-239
angular distribution for (n,n*7)
10^0
ProbCos
1.0
0.5
0.0
-0.5
-1.0
Cosine
0
5
10
15
20
25
30
Energy (MeV)

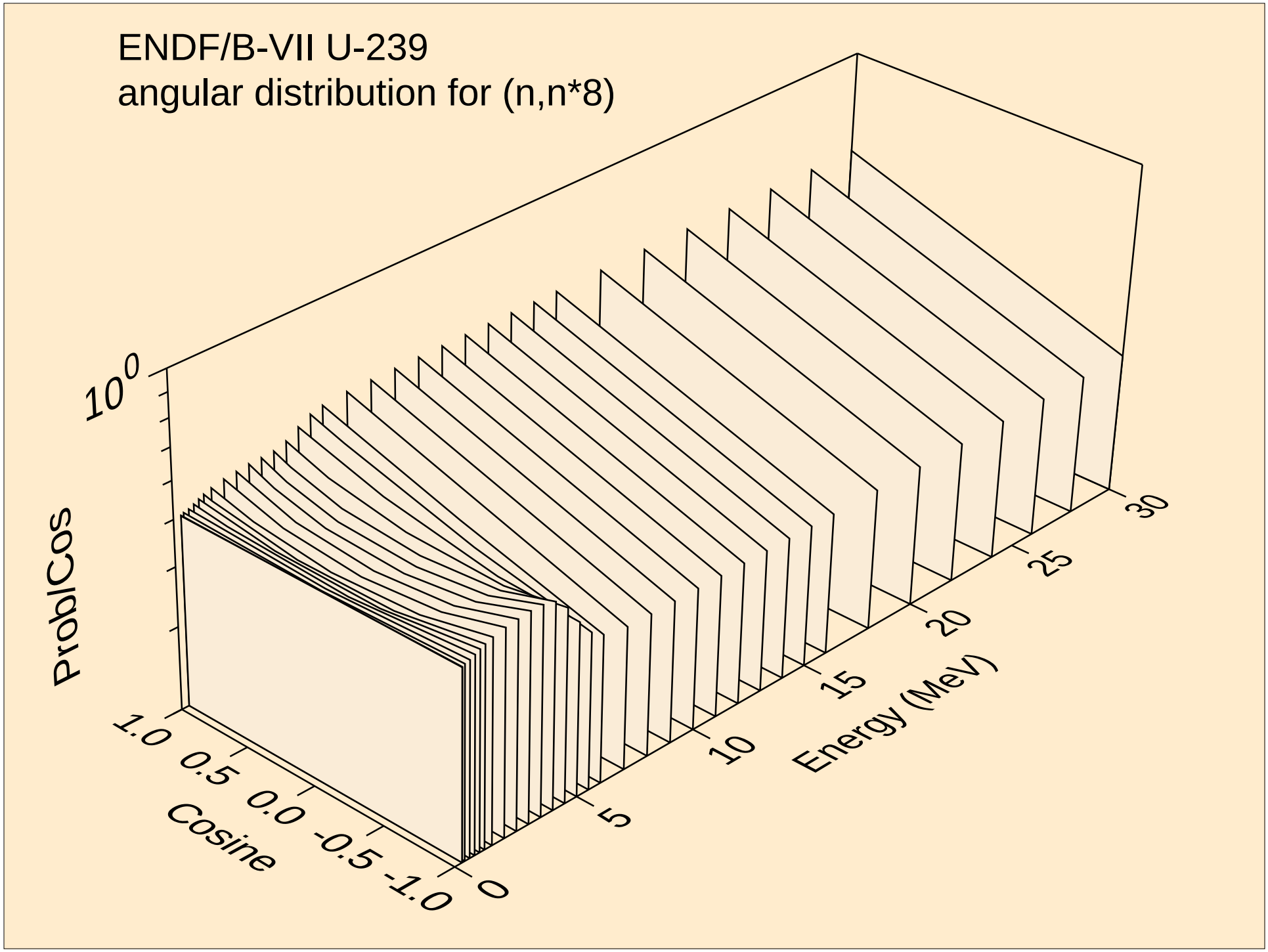
ENDF/B-VII U-239
angular distribution for (n,n*8)
10^0
ProbCos
1.0
0.5
0.0
-0.5
-1.0
Cosine
0
5
10
15
20
25
30
Energy (MeV)

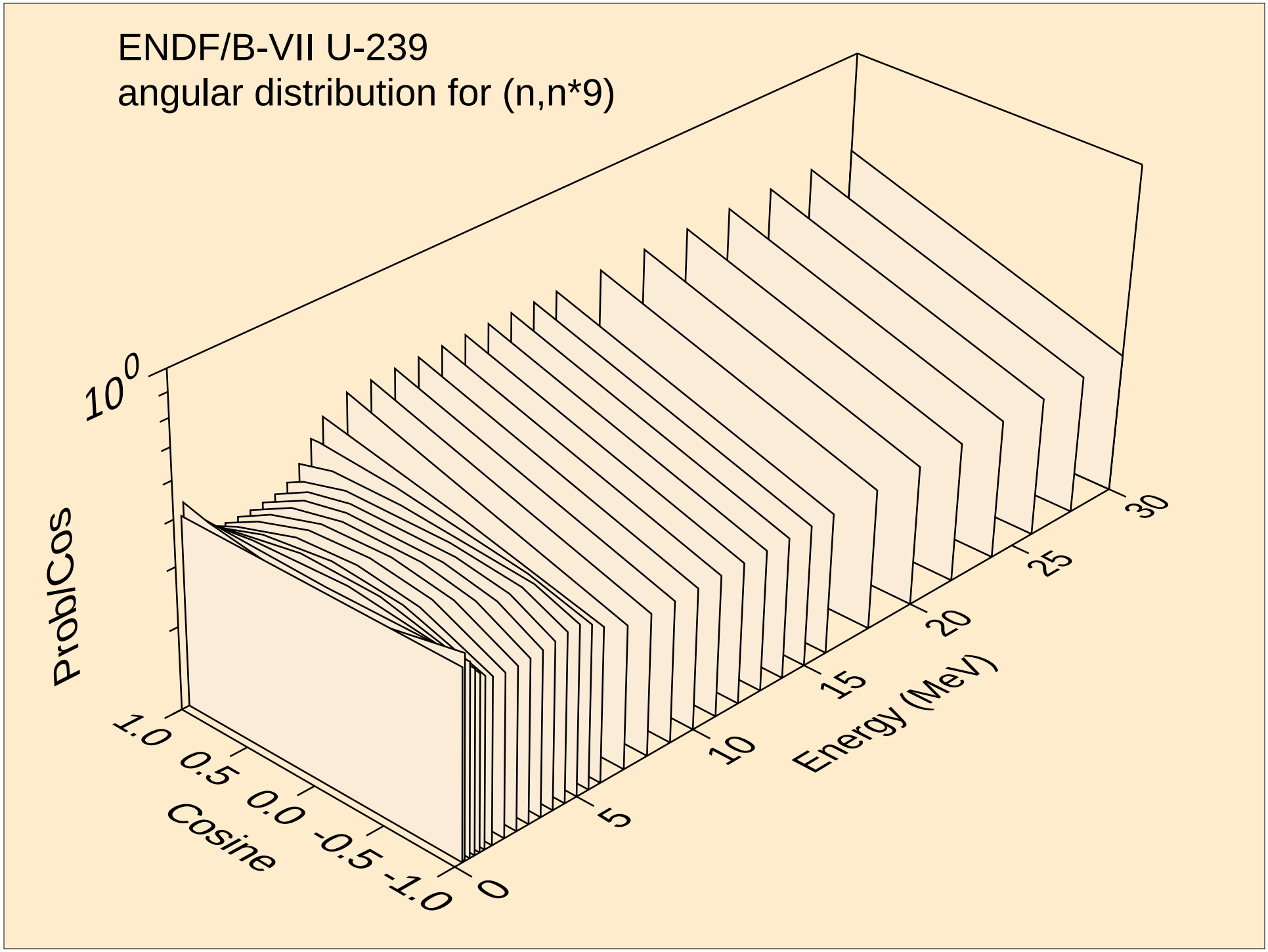
ENDF/B-VII U-239
angular distribution for (n,n*9)
10^0
ProbCos
1.0
0.5
0.0
-0.5
-1.0
Cosine
0
5
10
15
20
25
30
Energy (MeV)

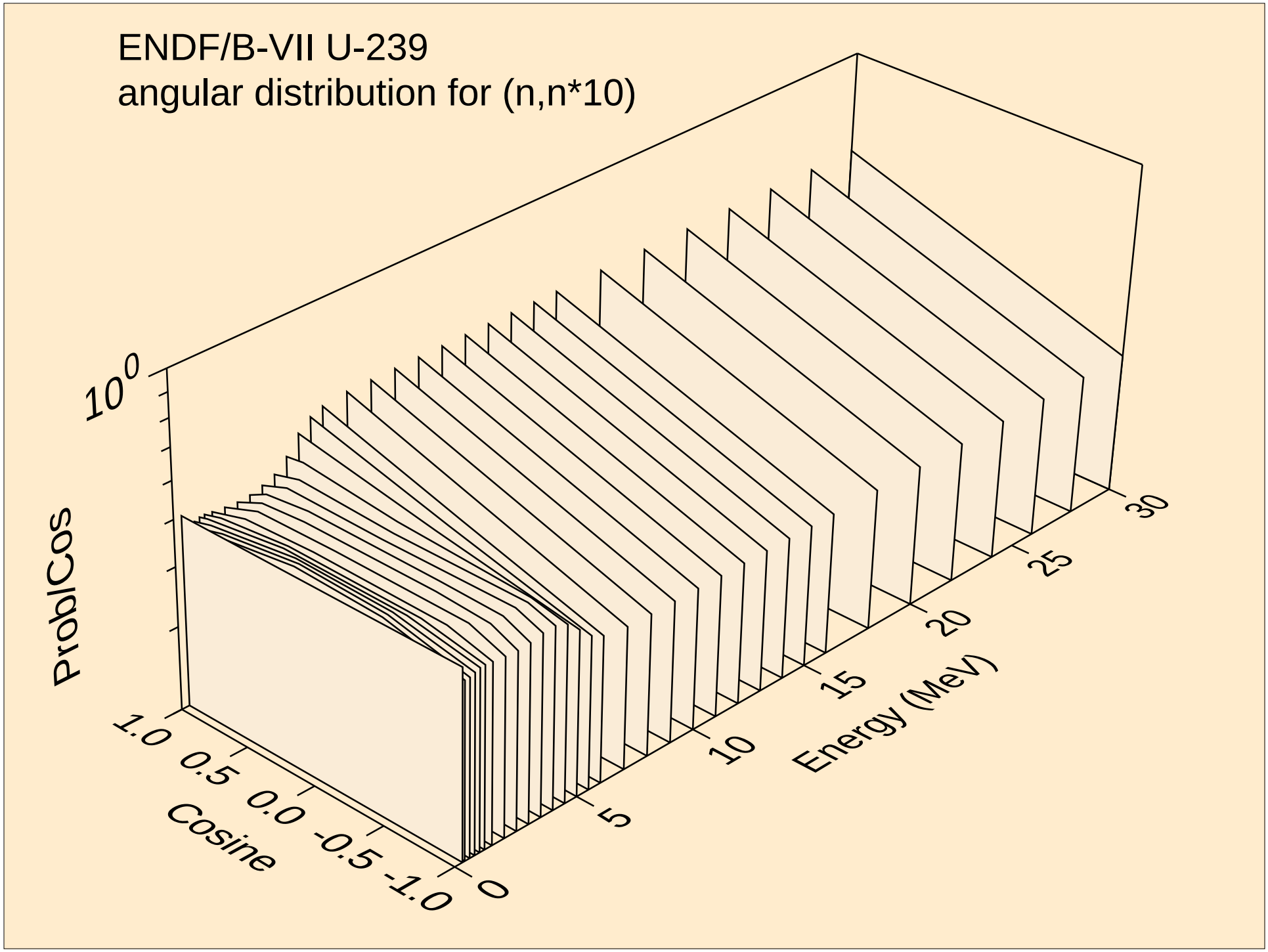
ENDF/B-VII U-239
angular distribution for (n,n*10)
10^0
ProbCos
1.0
0.5
0.0
-0.5
-1.0
Cosine
0
5
10
15
20
25
30
Energy (MeV)

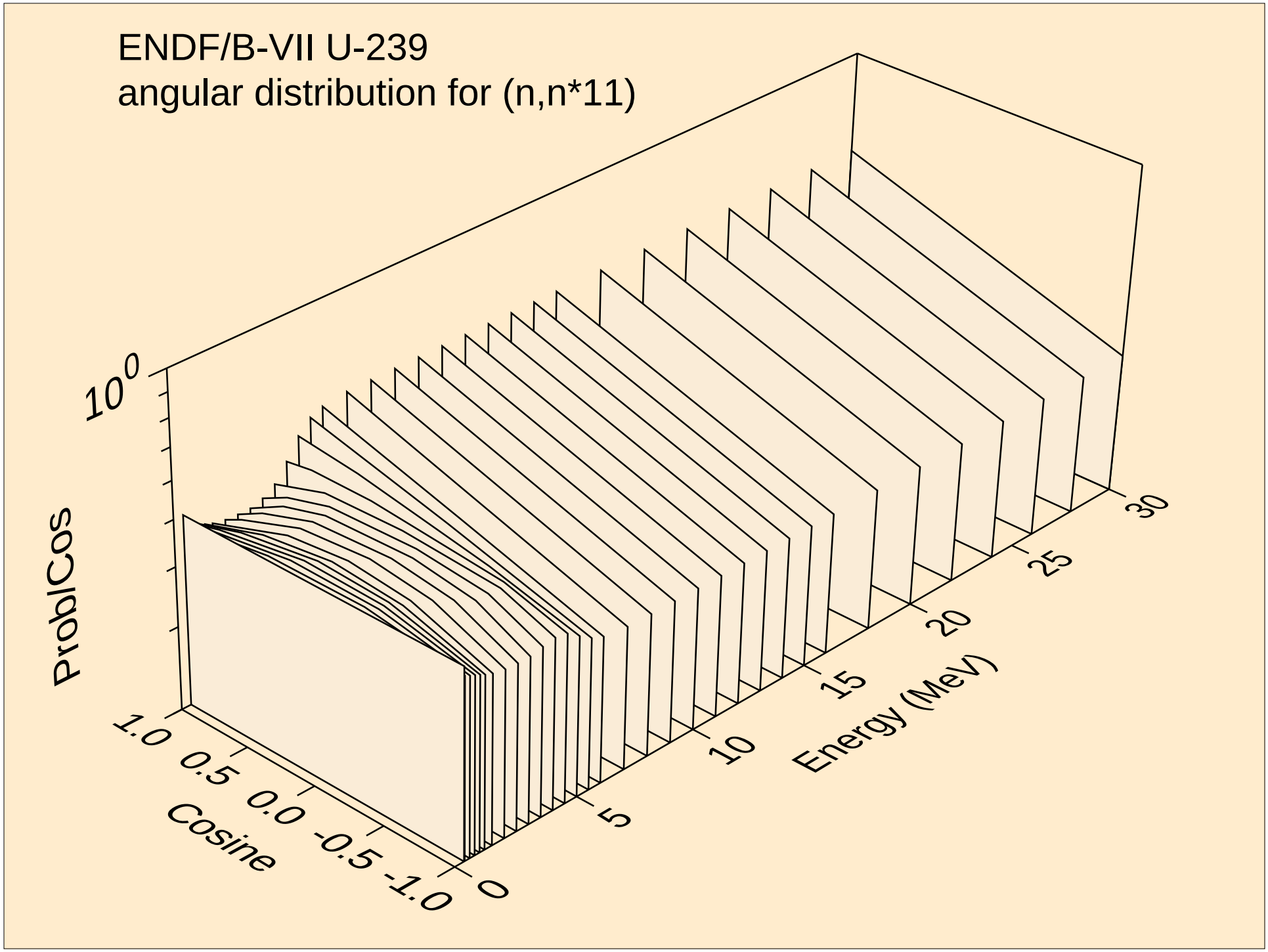
ENDF/B-VII U-239
angular distribution for (n,n*11)
10^0
ProbCos
1.0
0.5
0.0
-0.5
-1.0
Cosine
0
5
10
15
20
25
30
Energy (MeV)

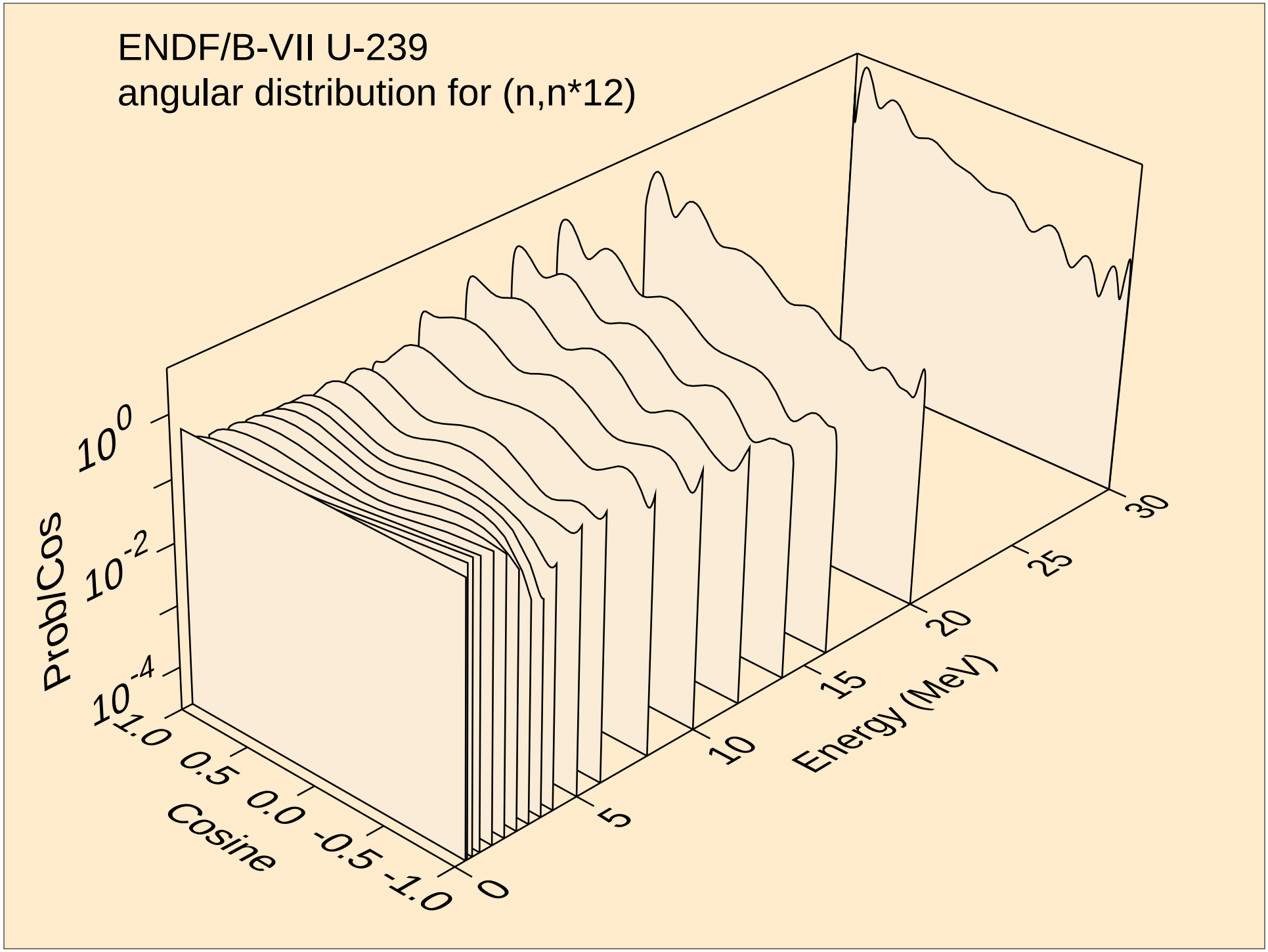
ENDF/B-VII U-239
angular distribution for (n,n*12)
ProbCos
10^{0}
10^{-2}
10^{-4}
Cosine
1.0
0.5
0.0
-0.5
-1.0
Energy (MeV)
0
5
10
15
20
25
30

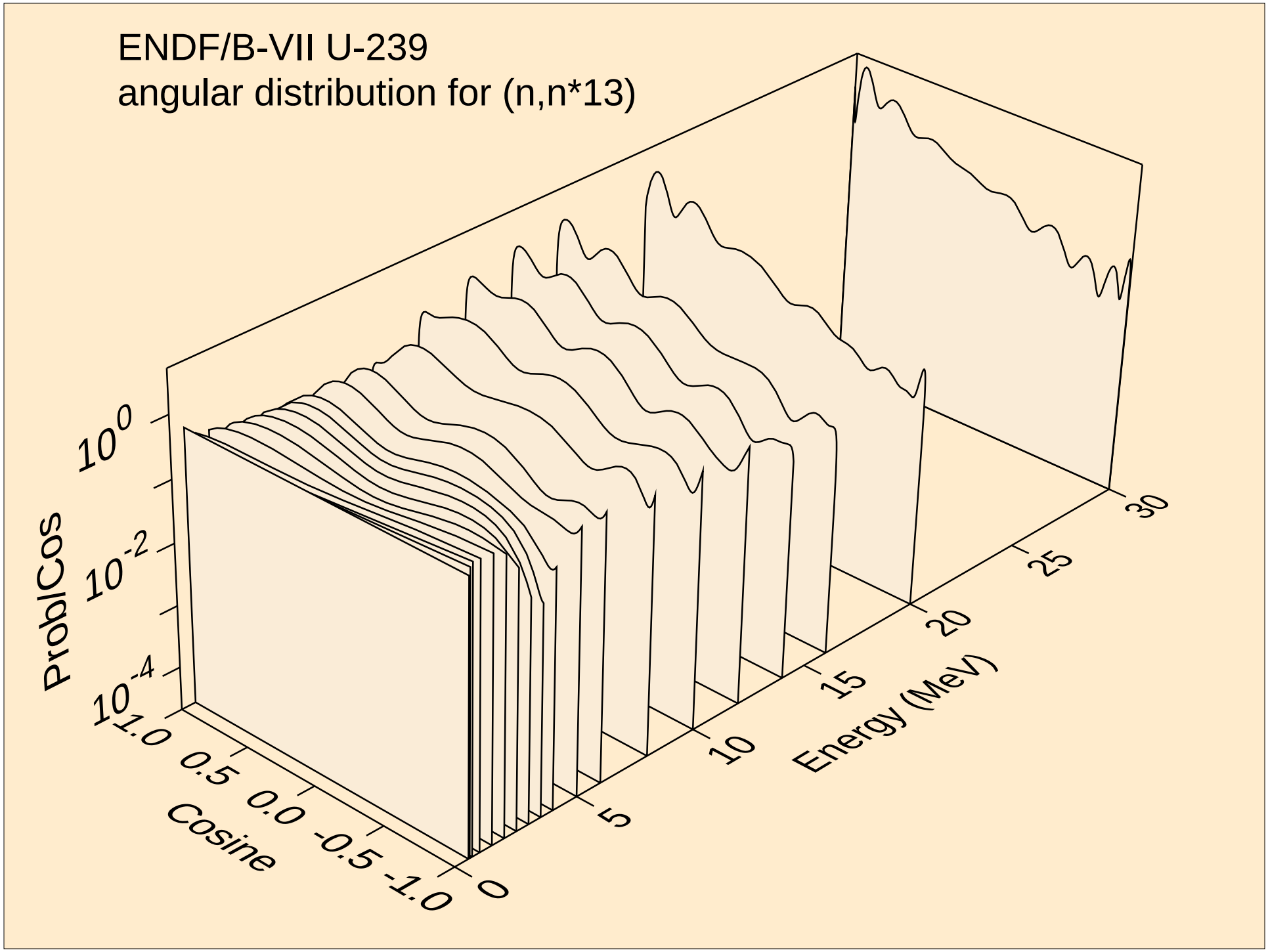
ENDF/B-VII U-239
angular distribution for (n,n*13)
ProbCos
10^{0}
10^{-2}
10^{-4}
Cosine
1.0
0.5
0.0
-0.5
-1.0
Energy (MeV)
0
5
10
15
20
25
30

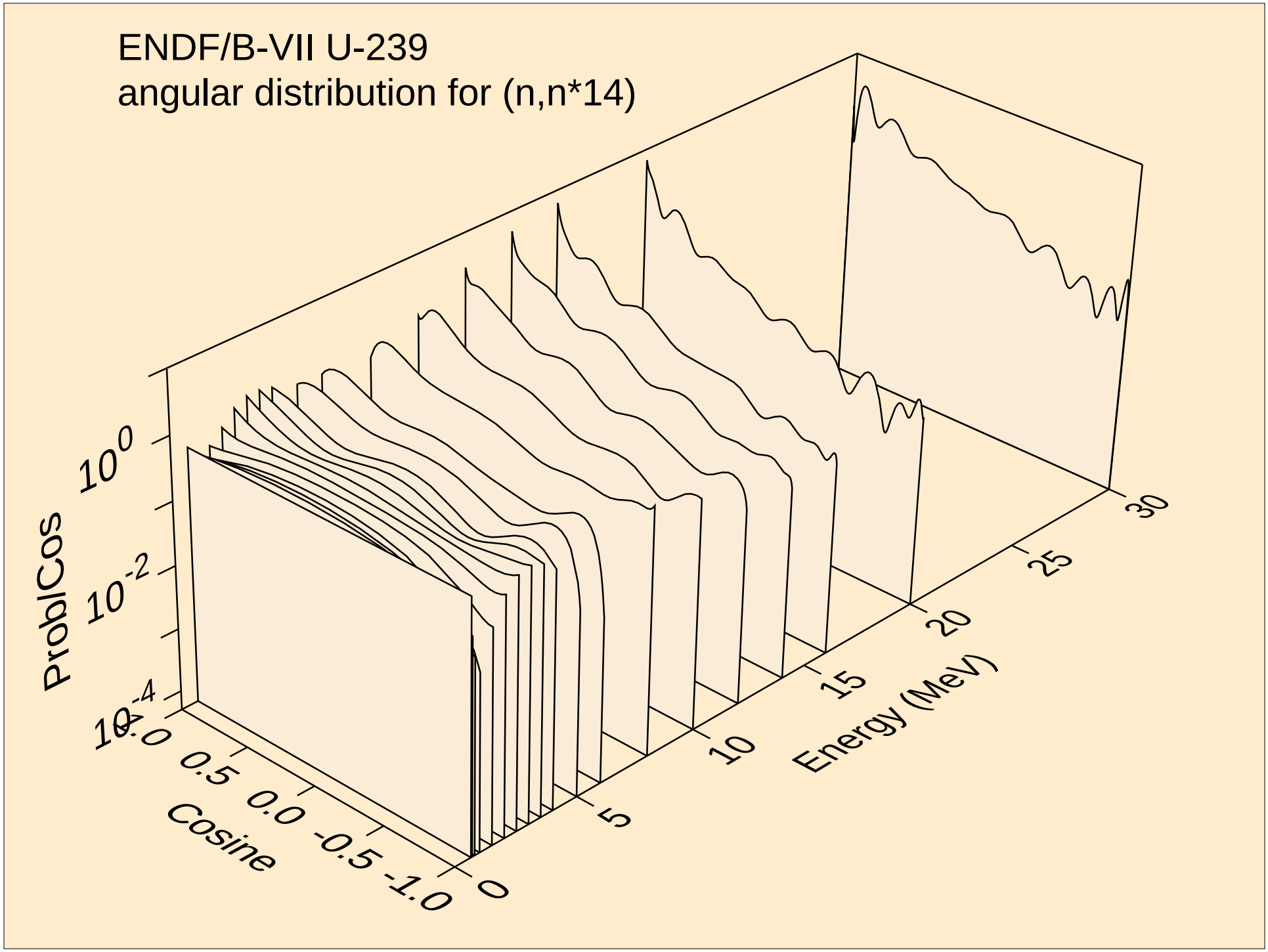
ENDF/B-VII U-239
angular distribution for (n,n*14)
ProbCos
10^{0}
10^{-2}
10^{-4}
1.0
0.5
0.0
-0.5
-1.0
Cosine
0
5
10
15
20
25
30
Energy (MeV)

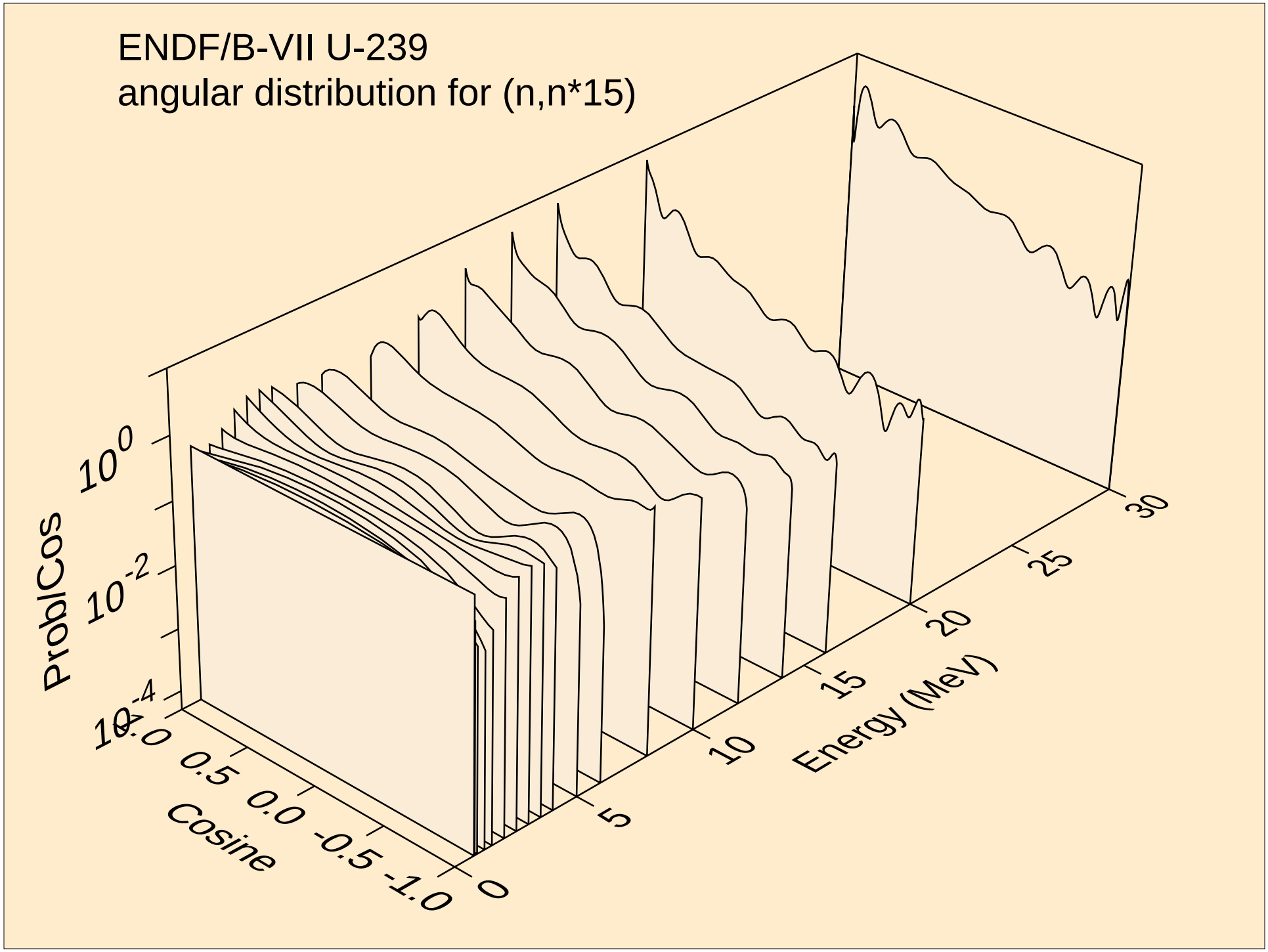
ENDF/B-VII U-239
angular distribution for (n,n*15)
ProbCos
10^{0}
10^{-2}
10^{-4}
Cosine
1.0
0.5
0.0
-0.5
-1.0
Energy (MeV)
0
5
10
15
20
25
30

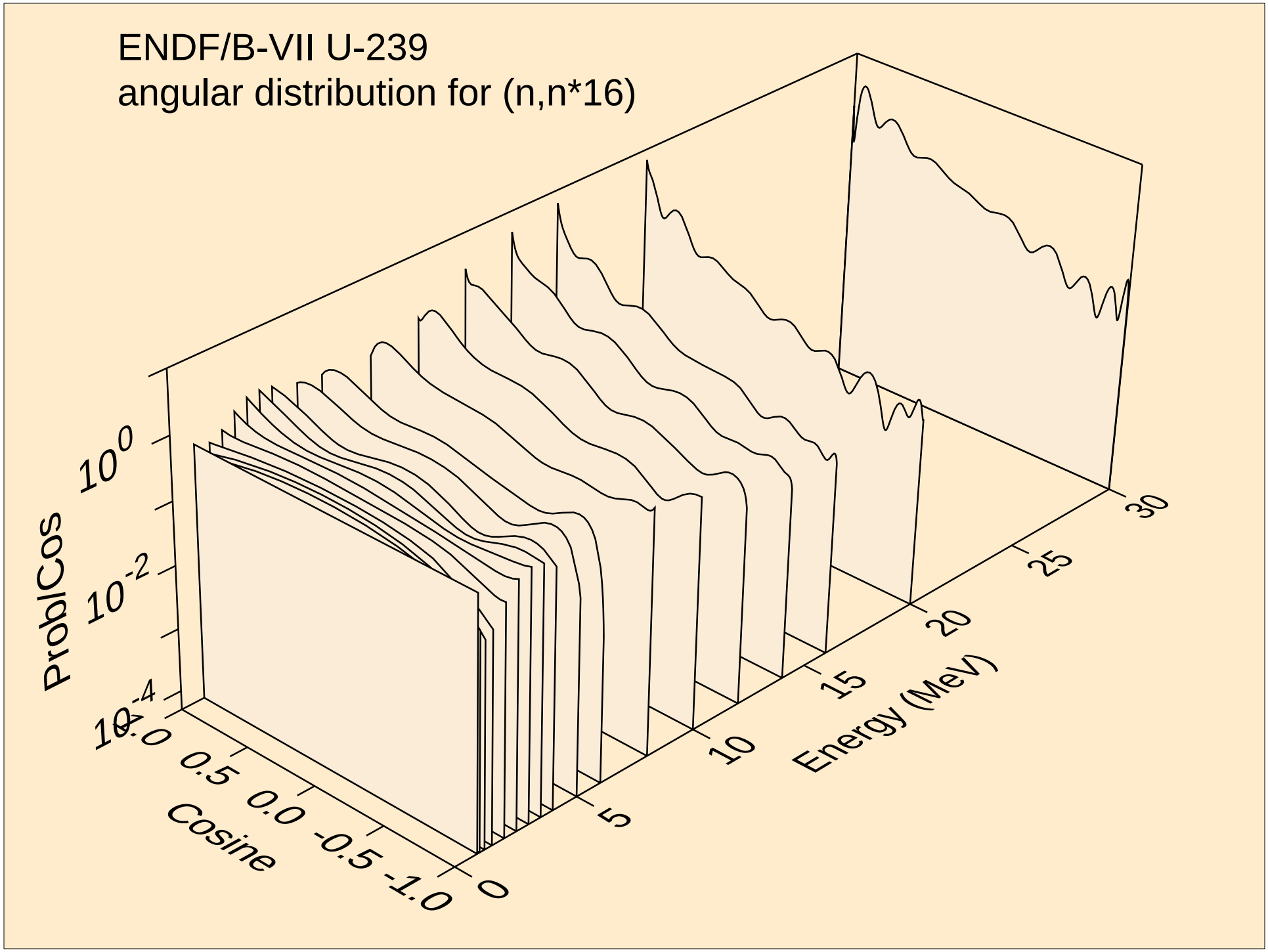
ENDF/B-VII U-239
angular distribution for (n,n*16)
ProbCos
10^{0}
10^{-2}
10^{-4}
1.0
0.5
0.0
-0.5
-1.0
Cosine
0
5
10
15
20
25
30
Energy (MeV)

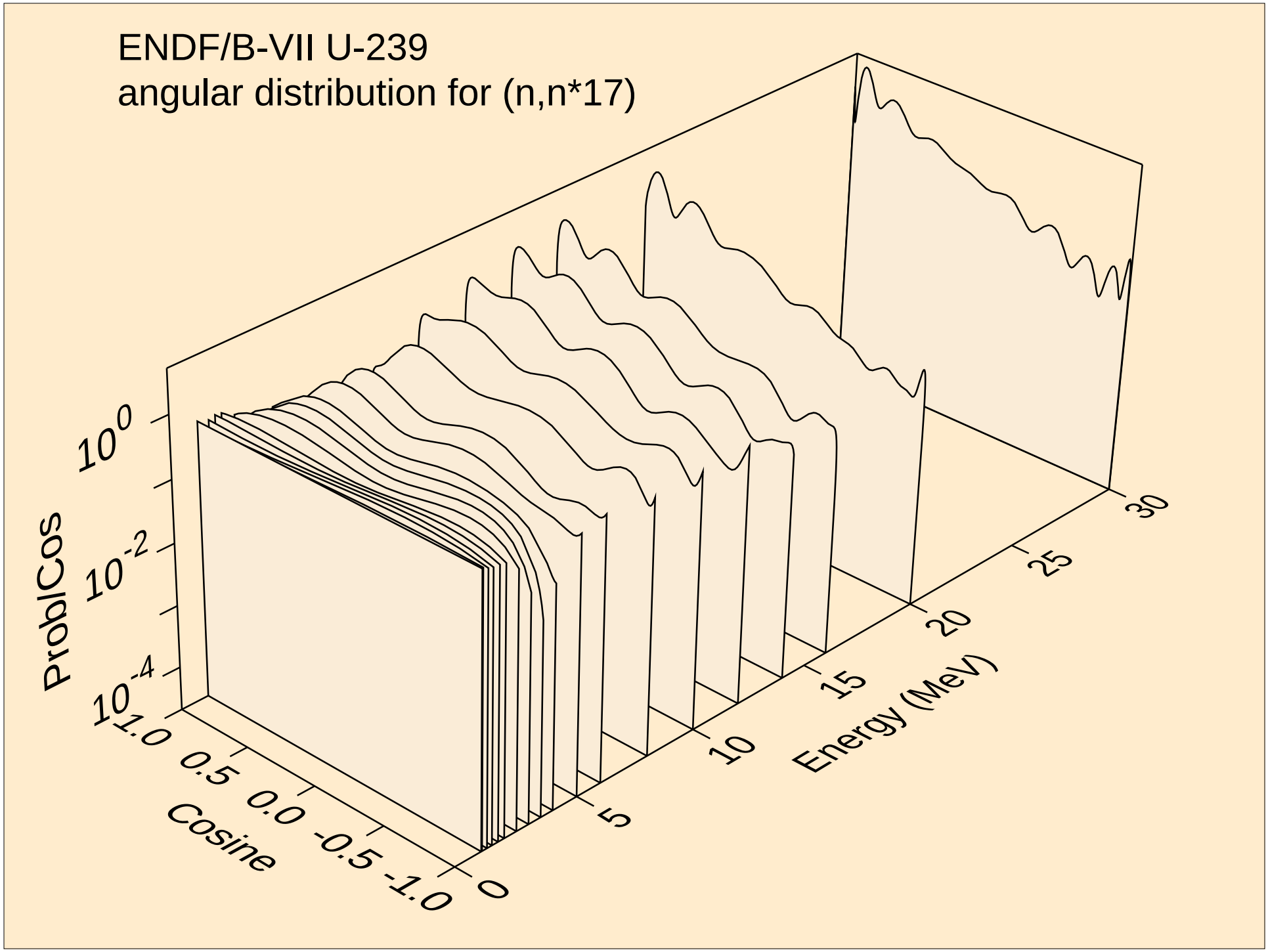
ENDF/B-VII U-239
angular distribution for (n,n*17)
ProbCos
10^{0}
10^{-2}
10^{-4}
Cosine
1.0
0.5
0.0
-0.5
-1.0
Energy (MeV)
0
5
10
15
20
25
30

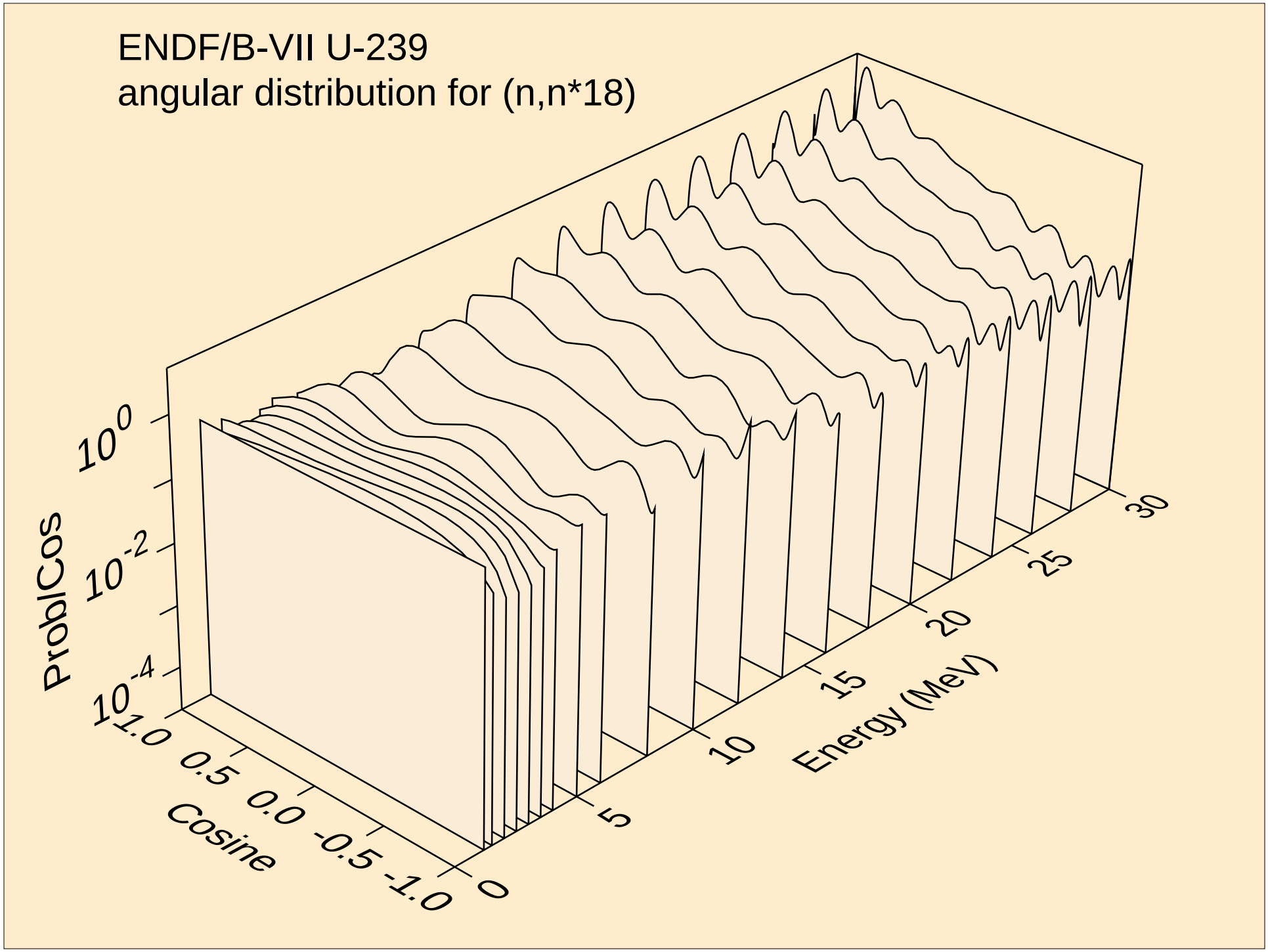
ENDF/B-VII U-239
angular distribution for (n,n*18)
ProbCos
10^{0}
10^{-2}
10^{-4}
Cosine
1.0
0.5
0.0
-0.5
-1.0
Energy (MeV)
0
5
10
15
20
25
30

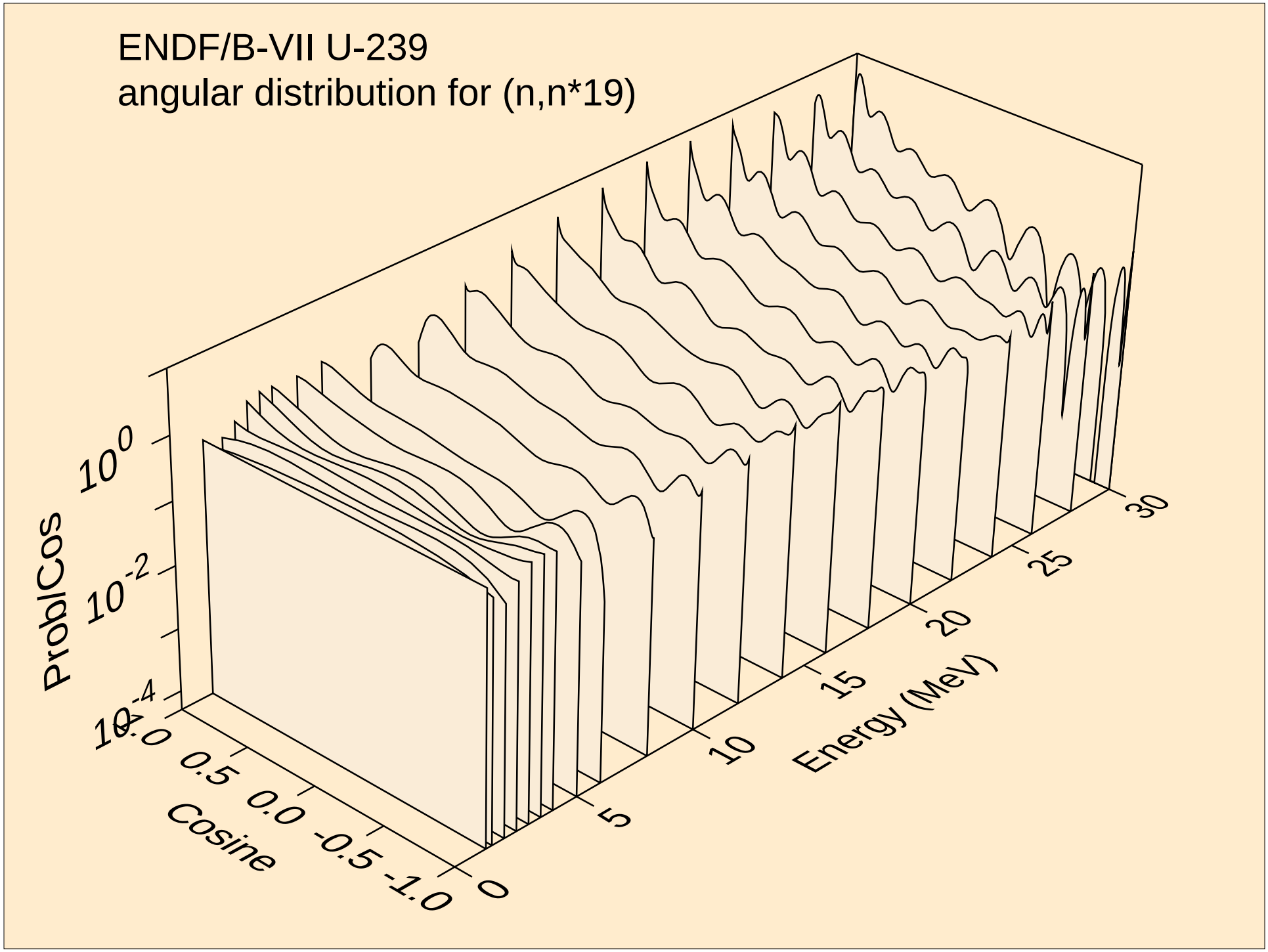
ENDF/B-VII U-239
angular distribution for (n,n*19)
ProbCos
10^{0}
10^{-2}
10^{-4}
1.0
0.5
0.0
-0.5
-1.0
Cosine
0
5
10
15
20
25
30
Energy (MeV)

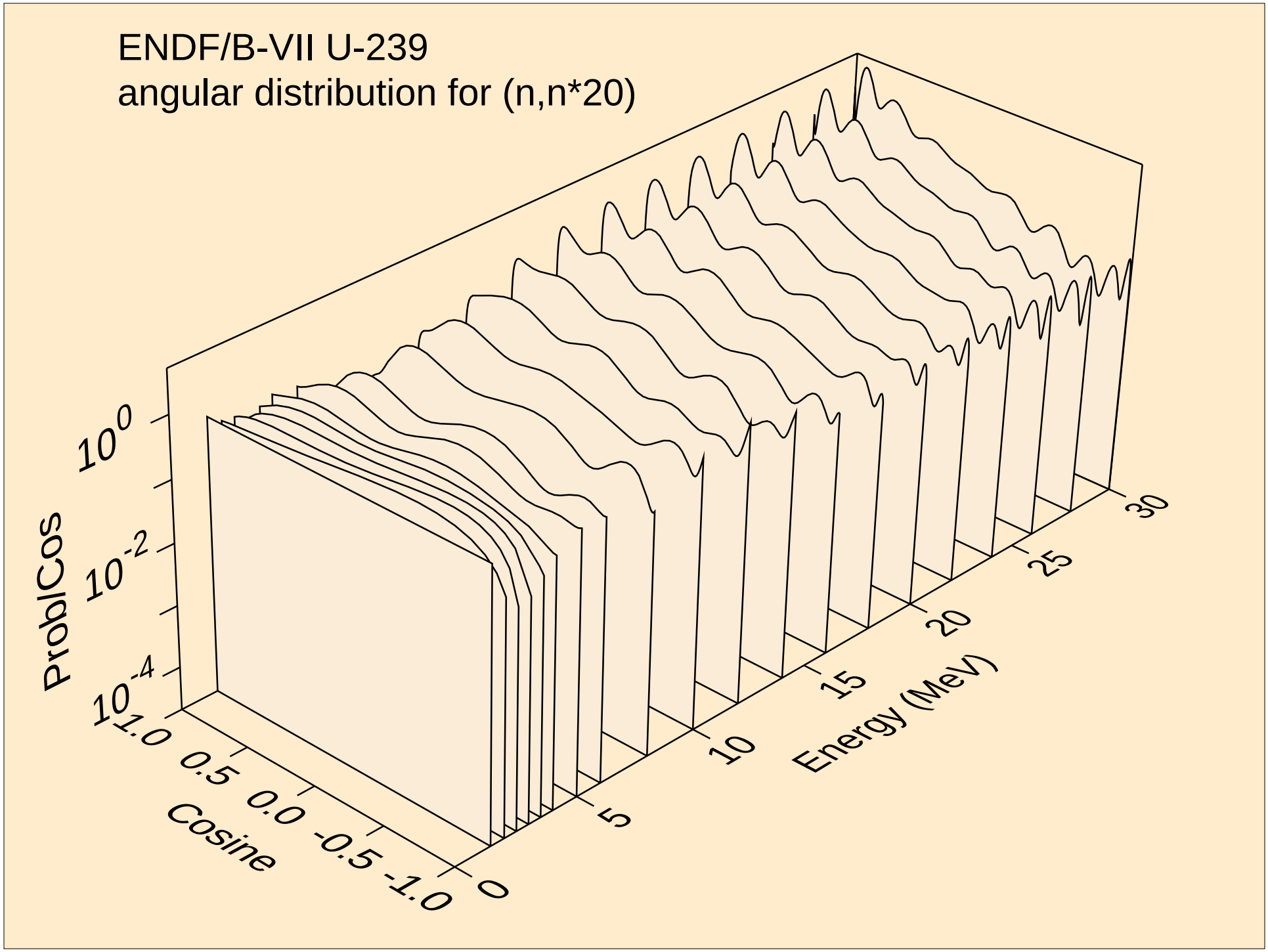
ENDF/B-VII U-239
angular distribution for (n,n*20)
ProbCos
10^{0}
10^{-2}
10^{-4}
Cosine
1.0
0.5
0.0
-0.5
-1.0
Energy (MeV)
0
5
10
15
20
25
30

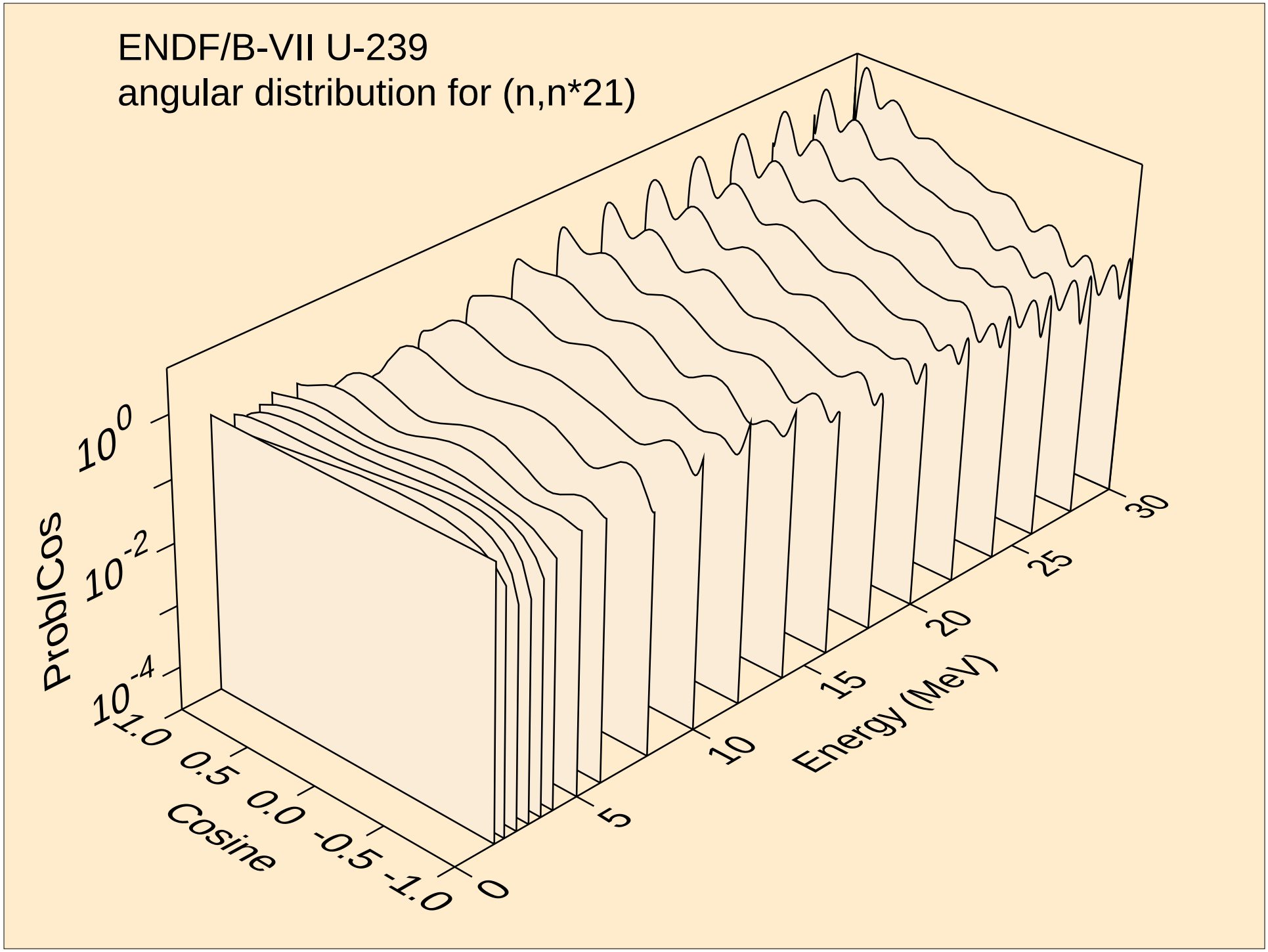
ENDF/B-VII U-239
angular distribution for (n,n*21)
ProbCos
10^{0}
10^{-2}
10^{-4}
Cosine
1.0
0.5
0.0
-0.5
-1.0
Energy (MeV)
0
5
10
15
20
25
30

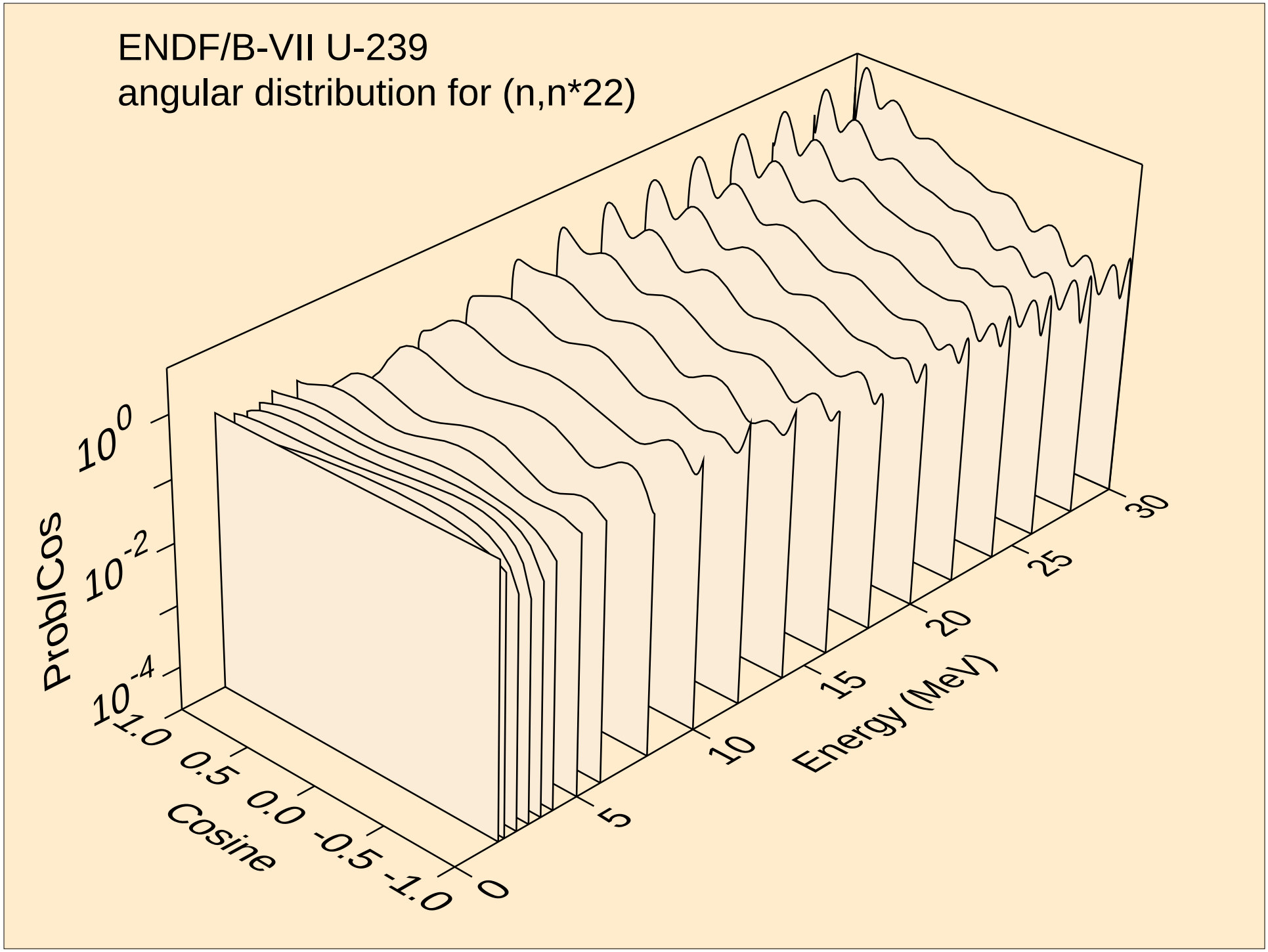
ENDF/B-VII U-239
angular distribution for (n,n*22)
ProbCos
10^{0}
10^{-2}
10^{-4}
Cosine
1.0
0.5
0.0
-0.5
-1.0
Energy (MeV)
0
5
10
15
20
25
30

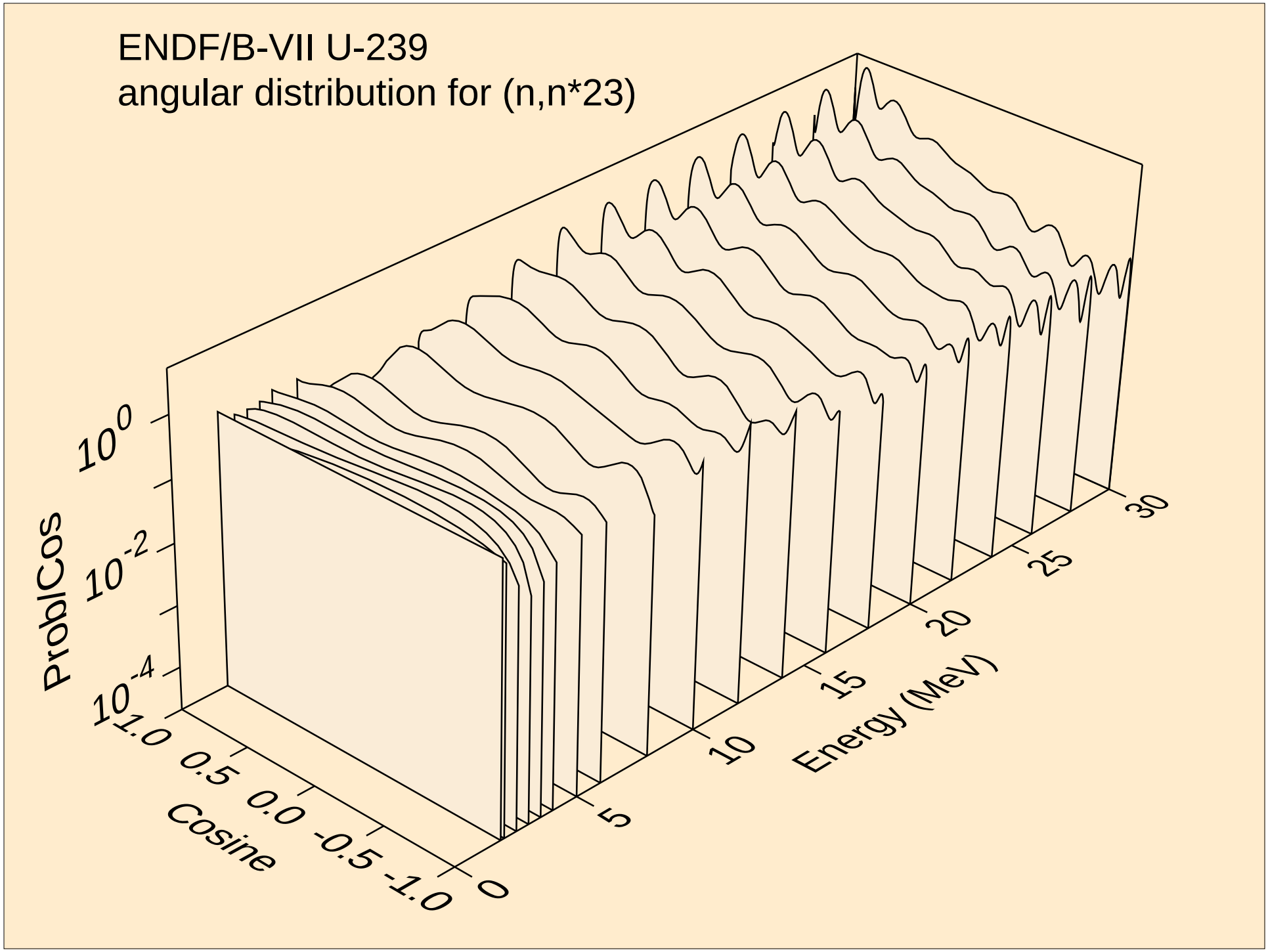
ENDF/B-VII U-239
angular distribution for (n,n*23)
ProbCos
10^{0}
10^{-2}
10^{-4}
Cosine
1.0
0.5
0.0
-0.5
-1.0
Energy (MeV)
0
5
10
15
20
25
30

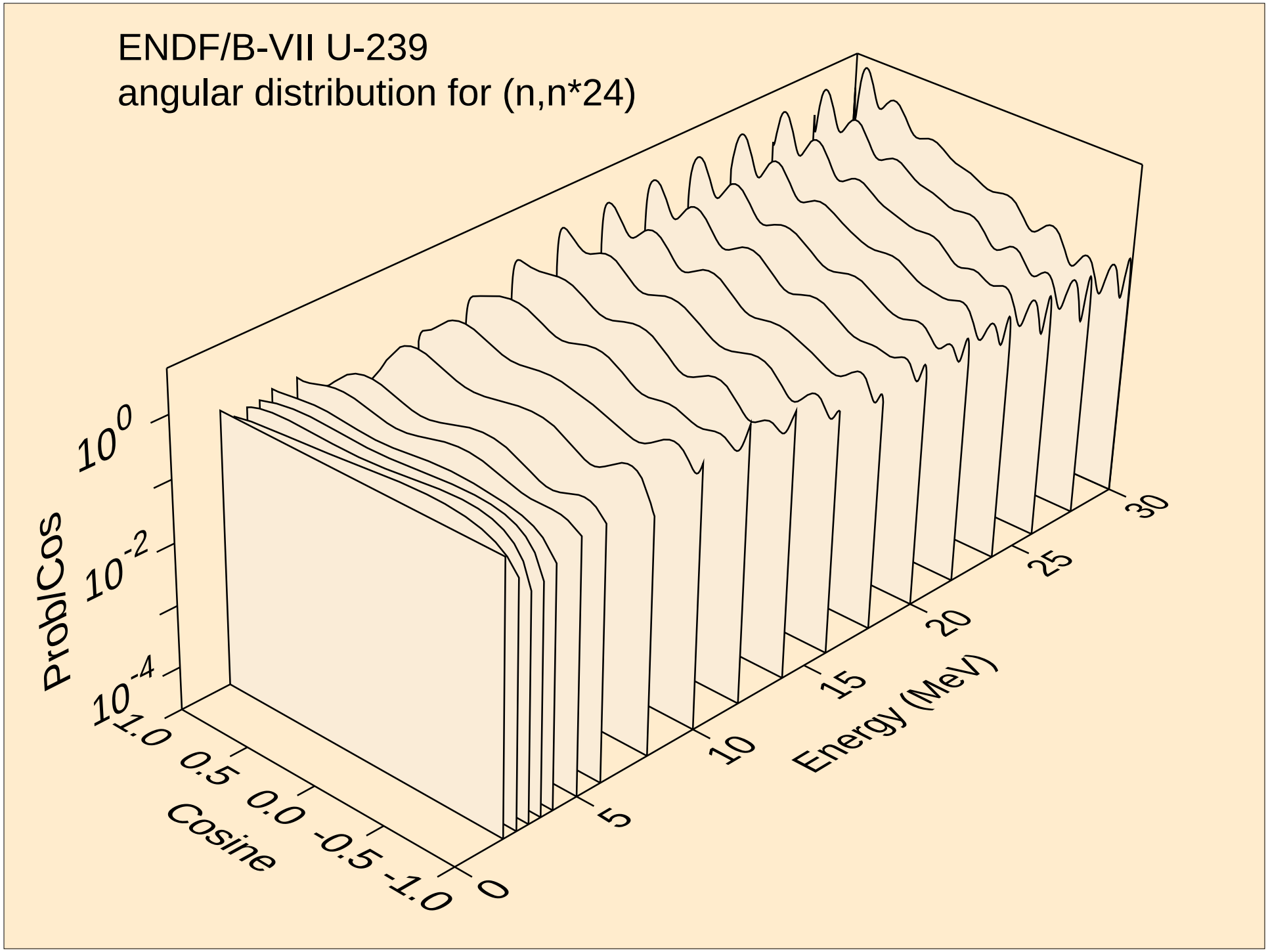
ENDF/B-VII U-239
angular distribution for (n,n*24)
ProbCos
10^{0}
10^{-2}
10^{-4}
Cosine
1.0
0.5
0.0
-0.5
-1.0
Energy (MeV)
0
5
10
15
20
25
30

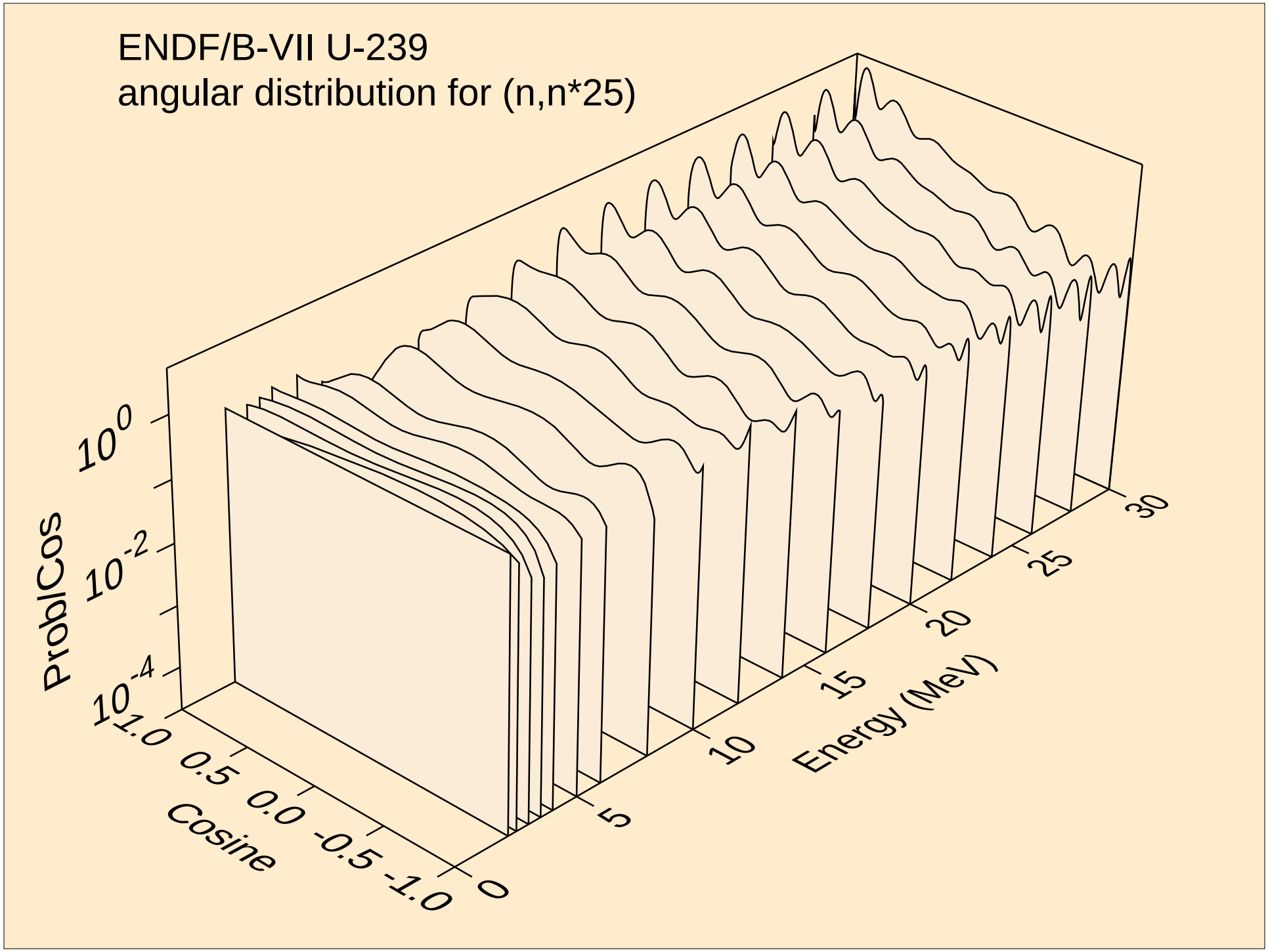
ENDF/B-VII U-239
angular distribution for (n,n*25)
ProbCos
10^{0}
10^{-2}
10^{-4}
Cosine
1.0
0.5
0.0
-0.5
-1.0
Energy (MeV)
0
5
10
15
20
25
30

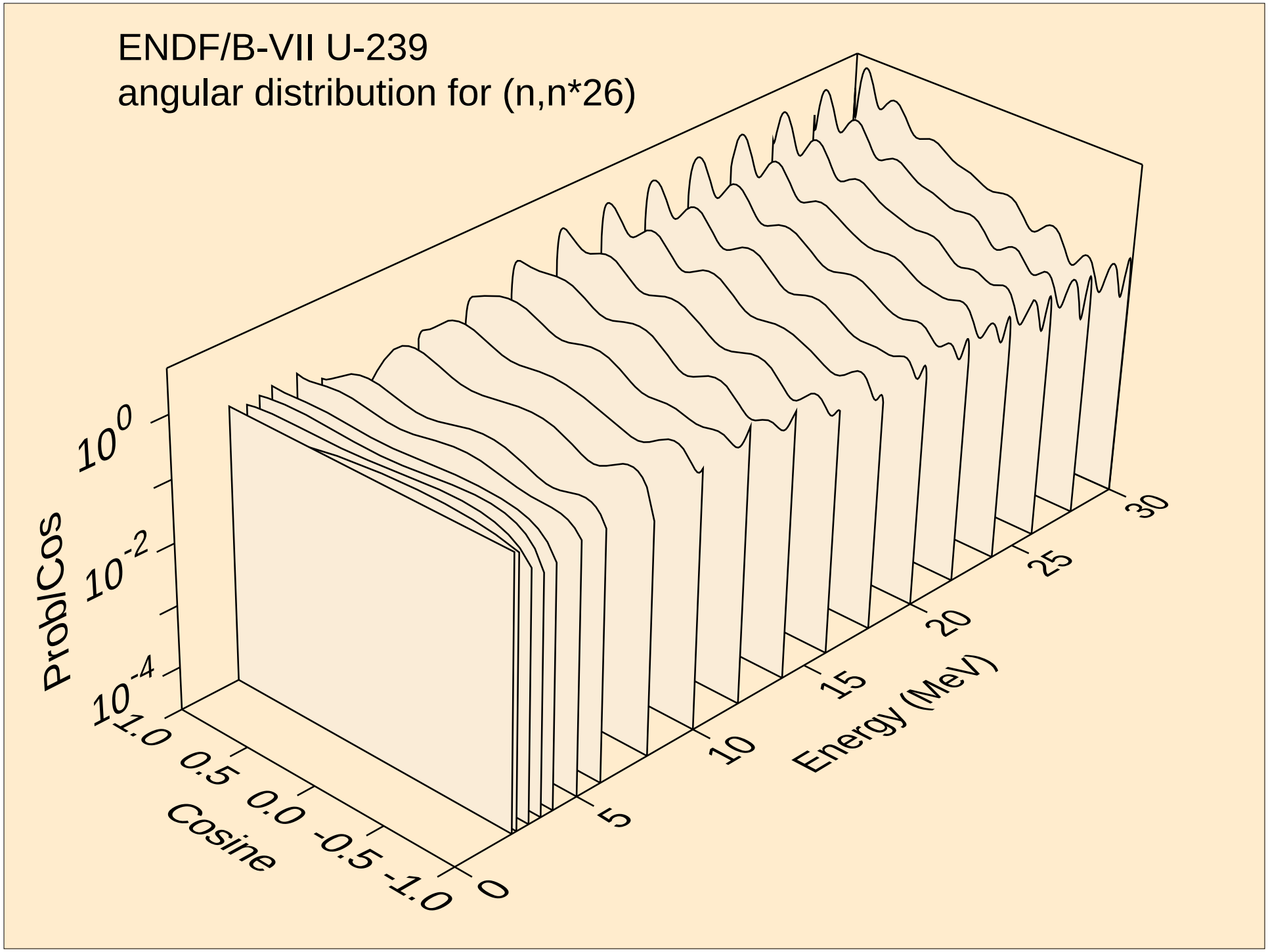
ENDF/B-VII U-239
angular distribution for (n,n*26)
ProbCos
10^{0}
10^{-2}
10^{-4}
Cosine
1.0
0.5
0.0
-0.5
-1.0
Energy (MeV)
0
5
10
15
20
25
30

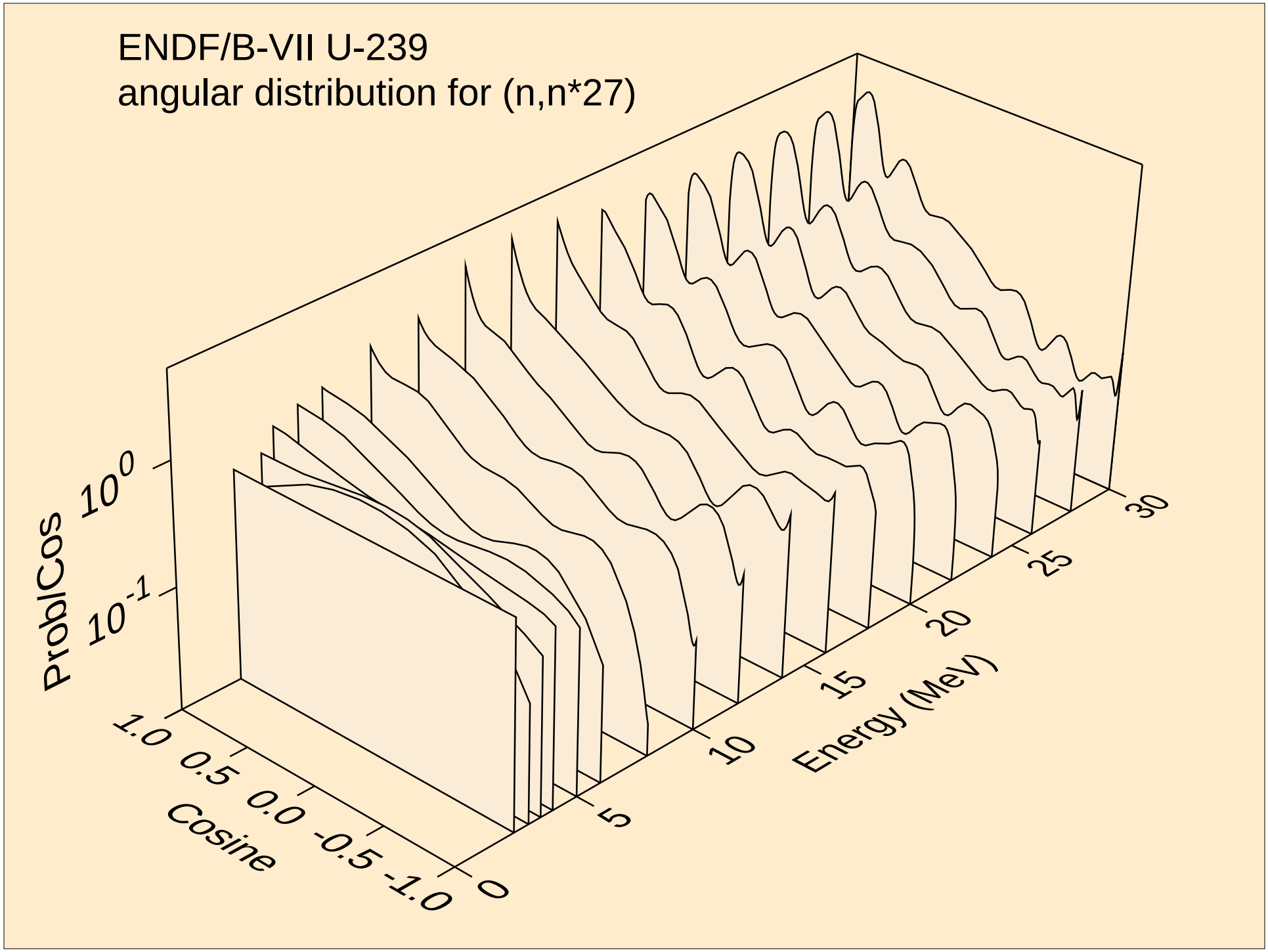
ENDF/B-VII U-239
angular distribution for (n,n*27)
Prob/Cos
10^0
10^{-1}
1.0
0.5
0.0
-0.5
-1.0
Cosine
0
5
10
15
20
25
30
Energy (MeV)

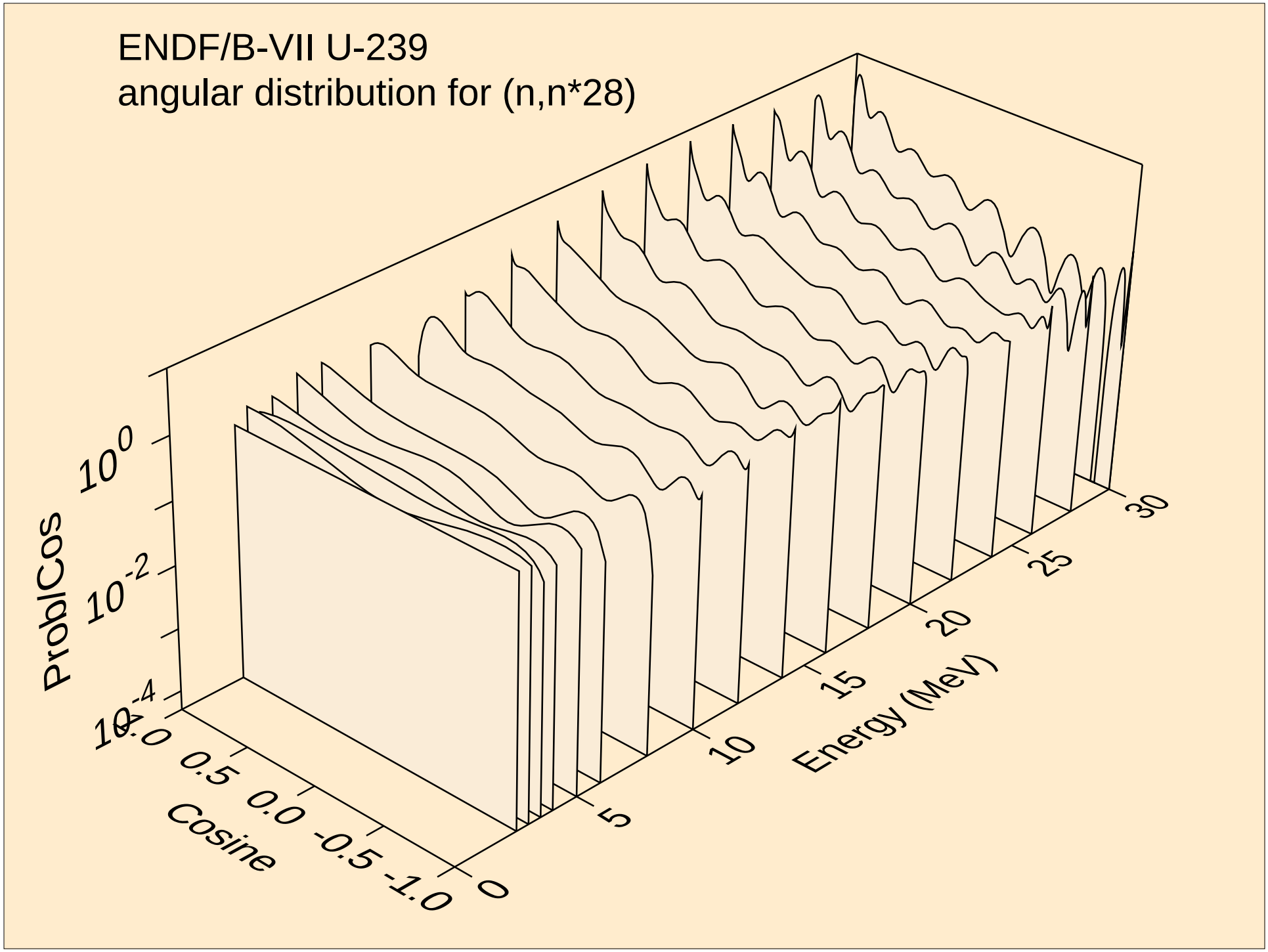
ENDF/B-VII U-239
angular distribution for (n,n*28)
ProbCos
10^{0}
10^{-2}
10^{-4}
1.0
0.5
0.0
-0.5
-1.0
Cosine
0
5
10
15
20
25
30
Energy (MeV)

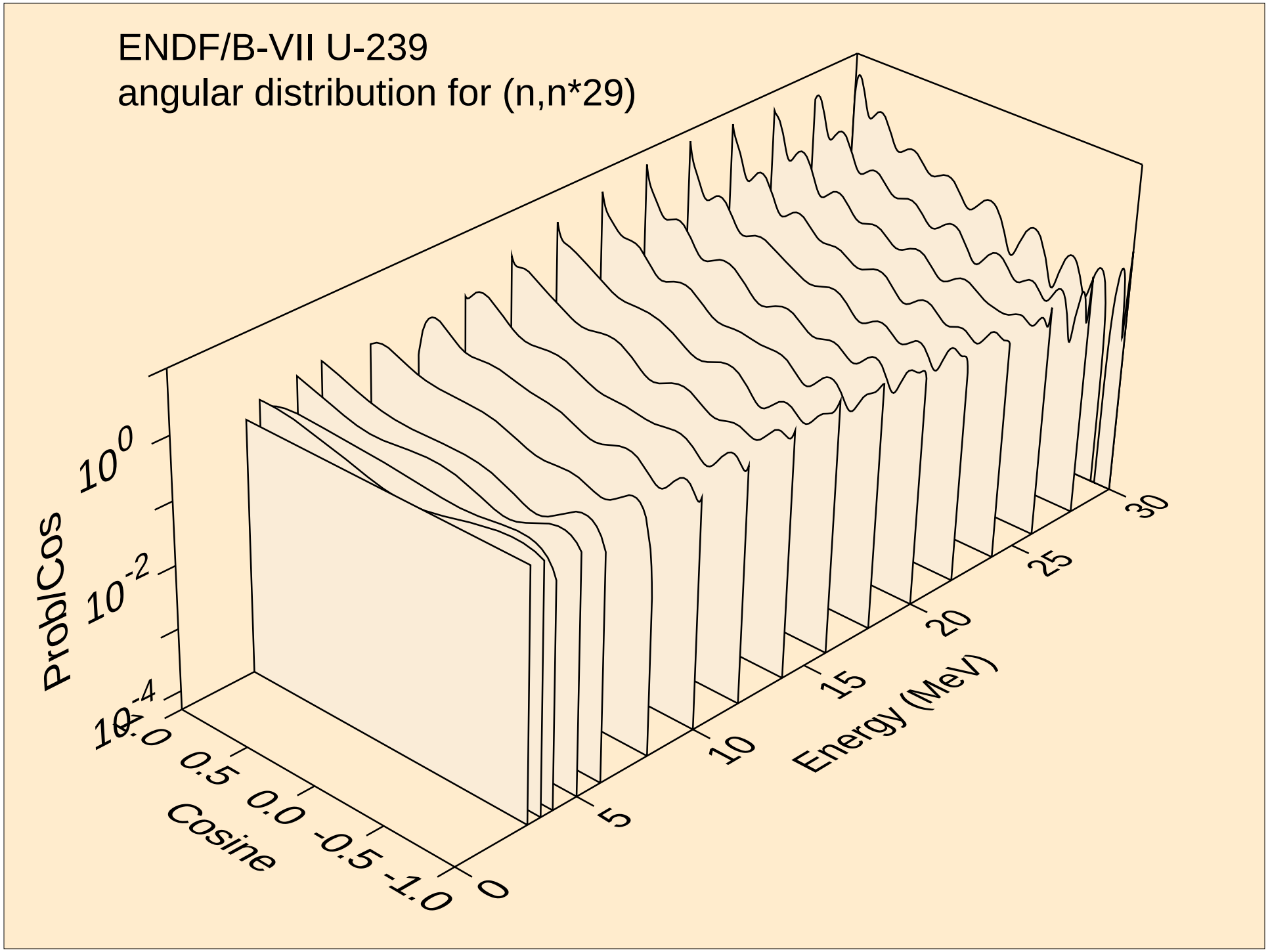
ENDF/B-VII U-239
angular distribution for (n,n*29)
ProbCos
10^{0}
10^{-2}
10^{-4}
1.0
0.5
0.0
-0.5
-1.0
Cosine
0
5
10
15
20
25
30
Energy (MeV)

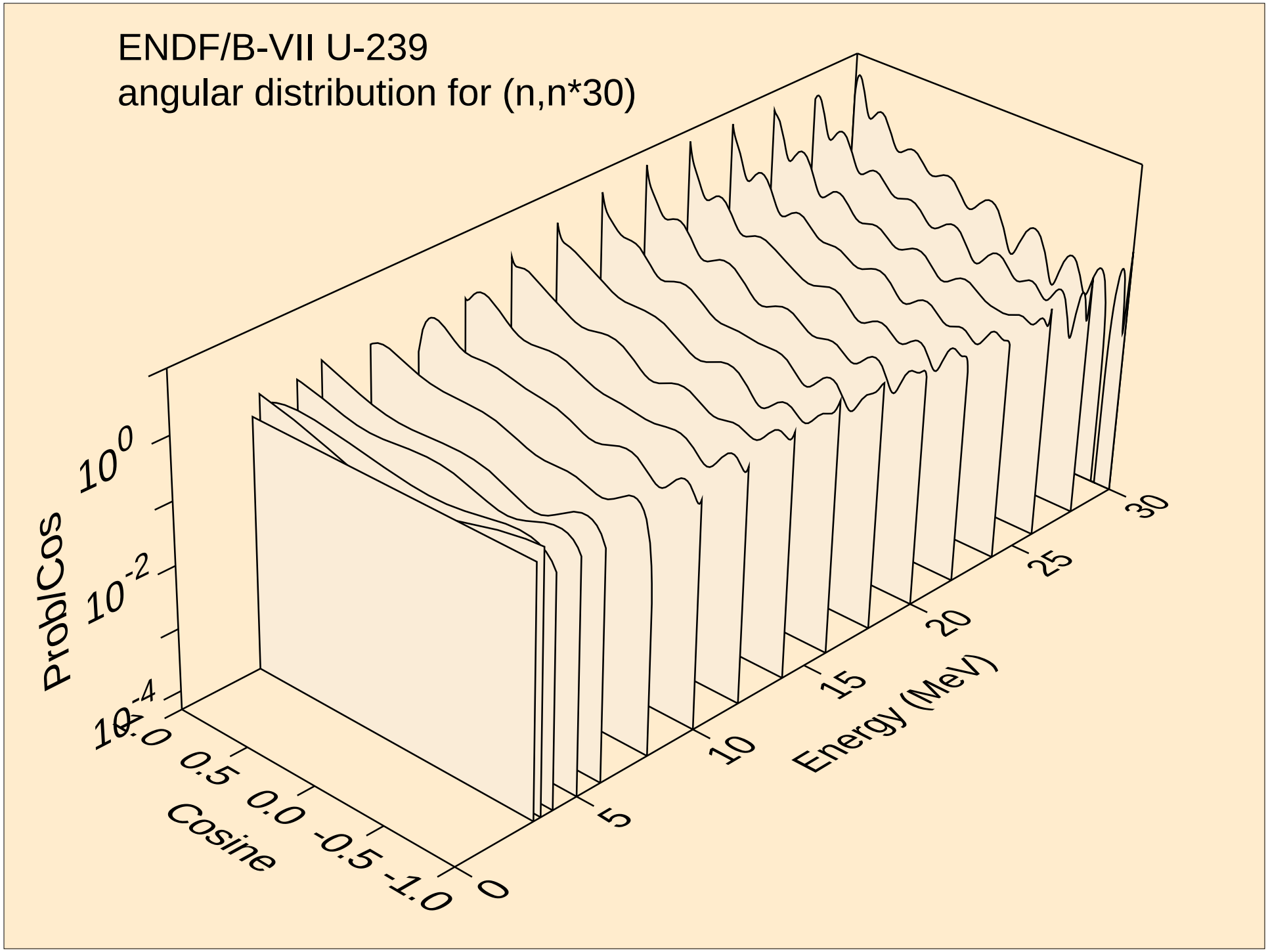
ENDF/B-VII U-239
angular distribution for (n,n*30)
Prob/Cos
10^{0}
10^{-2}
10^{-4}
1.0
0.5
0.0
-0.5
-1.0
Cosine
0
5
10
15
20
25
30
Energy (MeV)

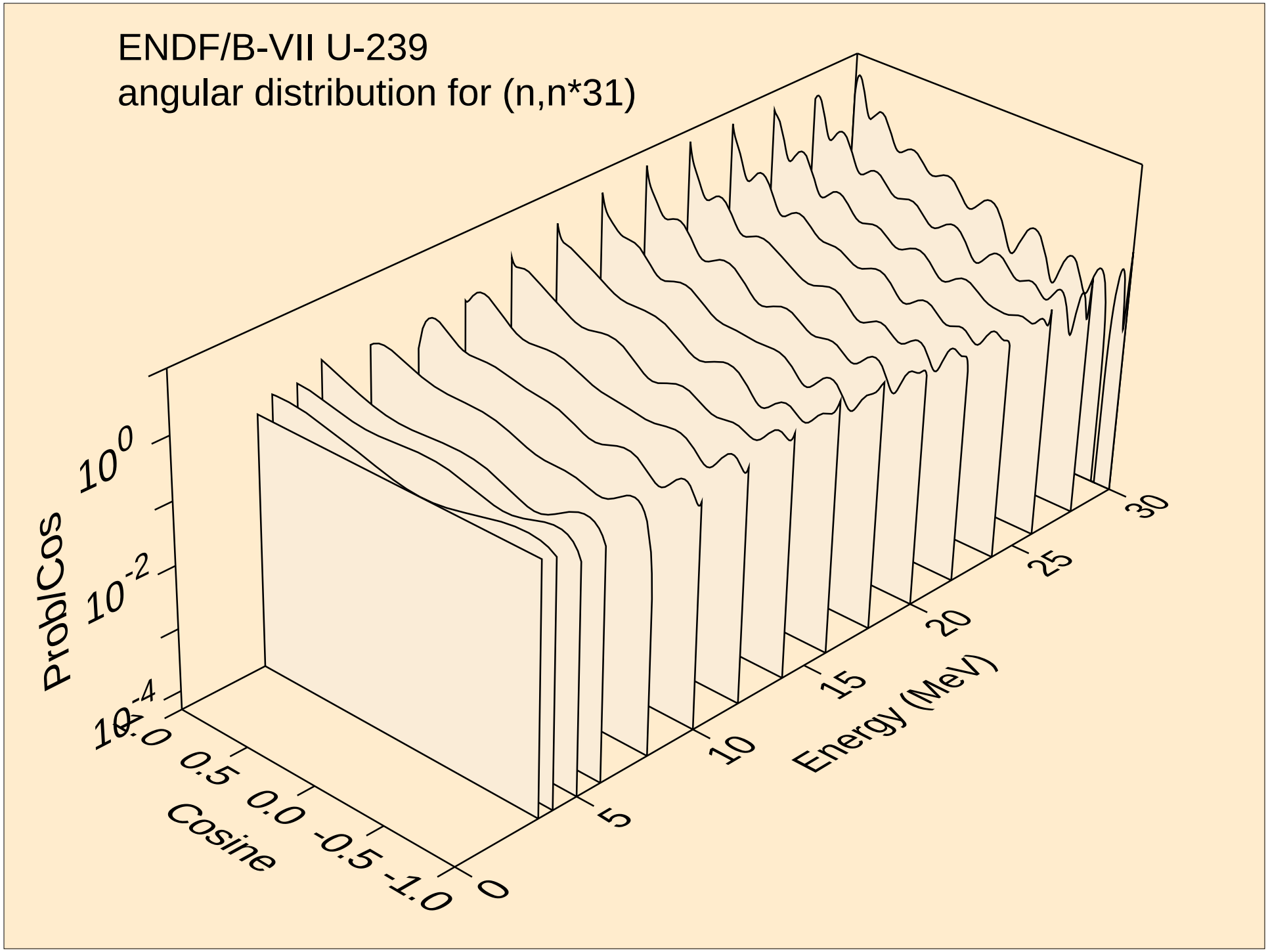
ENDF/B-VII U-239
angular distribution for (n,n*31)
Prob/Cos
10^{0}
10^{-2}
10^{-4}
1.0
0.5
0.0
-0.5
-1.0
Cosine
0
5
10
15
20
25
30
Energy (MeV)

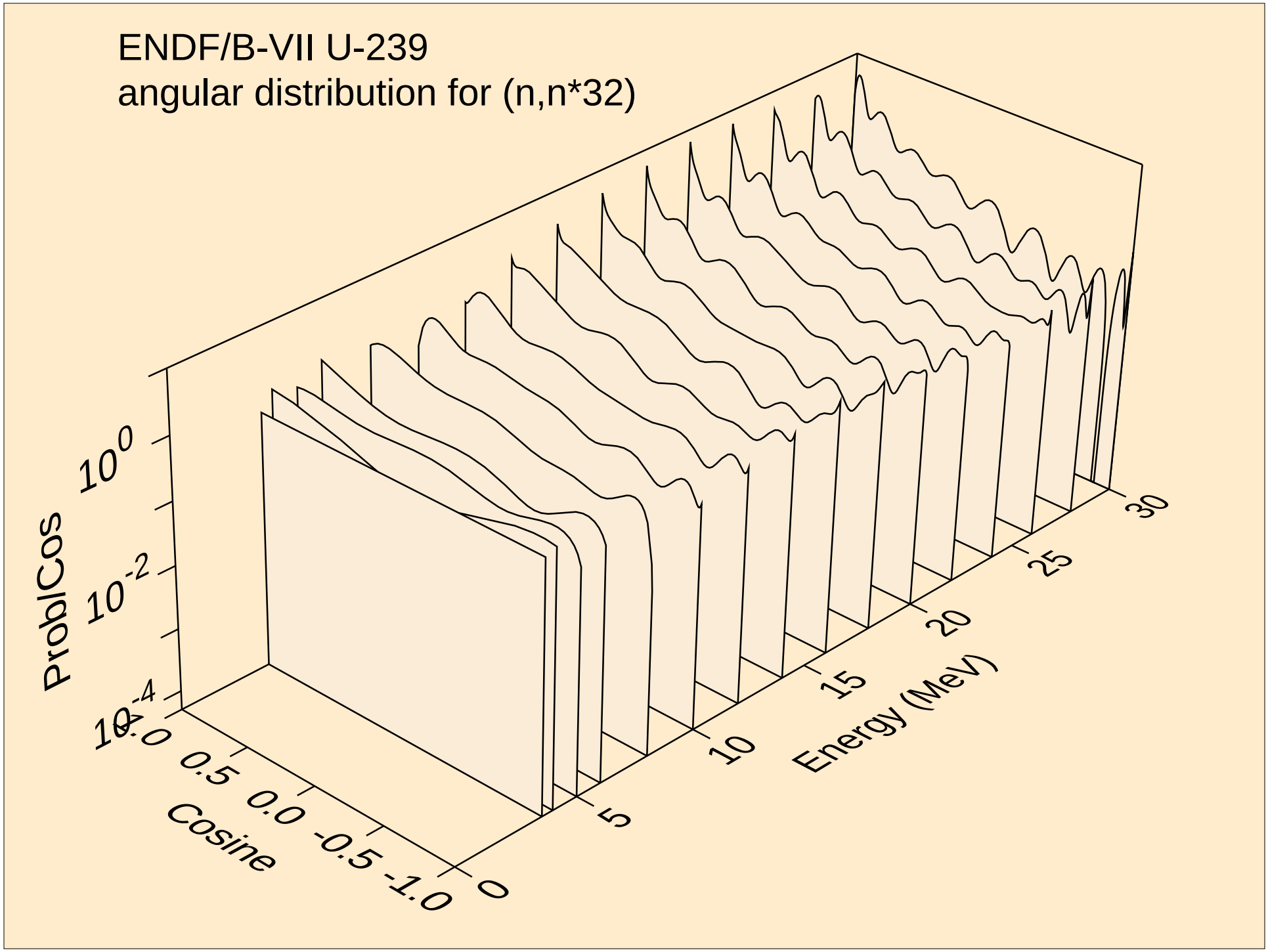
ENDF/B-VII U-239
angular distribution for (n,n*32)
Prob/Cos
10^{0}
10^{-2}
10^{-4}
1.0
0.5
0.0
-0.5
-1.0
Cosine
0
5
10
15
20
25
30
Energy (MeV)

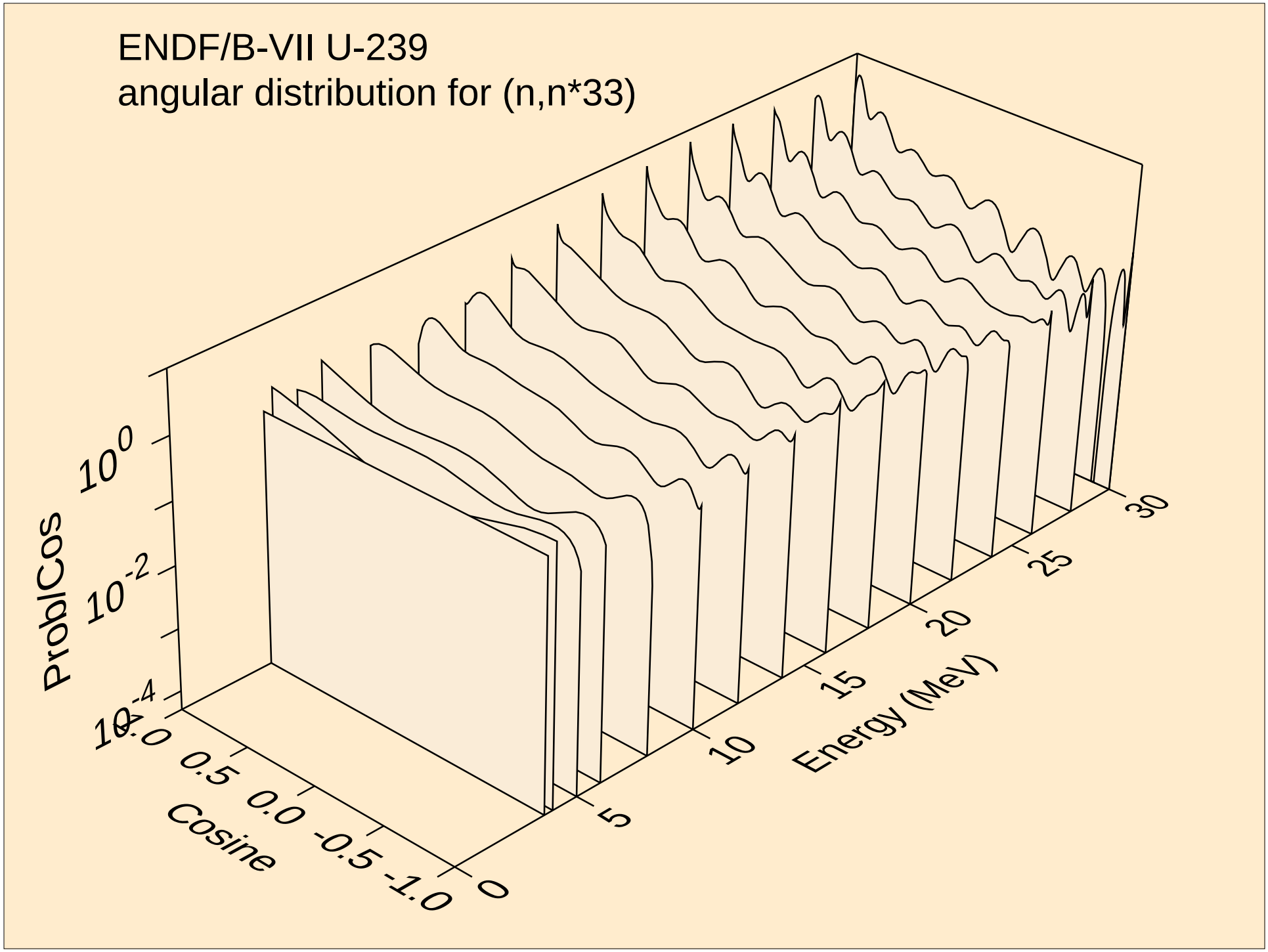
ENDF/B-VII U-239
angular distribution for (n,n*33)
Prob/Cos
10^{0}
10^{-2}
10^{-4}
1.0
0.5
0.0
-0.5
-1.0
Cosine
0
5
10
15
20
25
30
Energy (MeV)

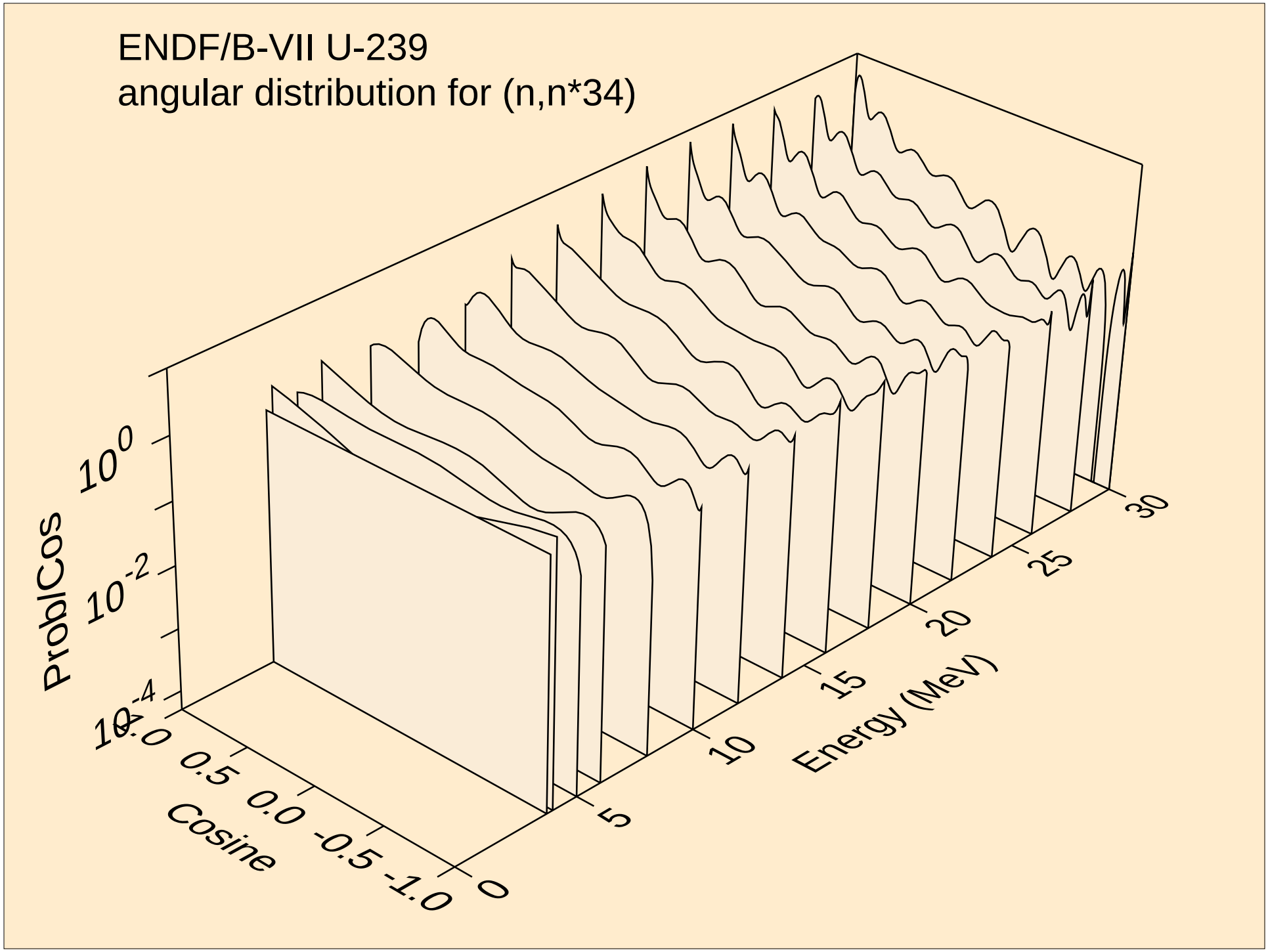
ENDF/B-VII U-239
angular distribution for (n,n*34)
Prob/Cos
10^{0}
10^{-2}
10^{-4}
1.0
0.5
0.0
-0.5
-1.0
Cosine
0
5
10
15
20
25
30
Energy (MeV)

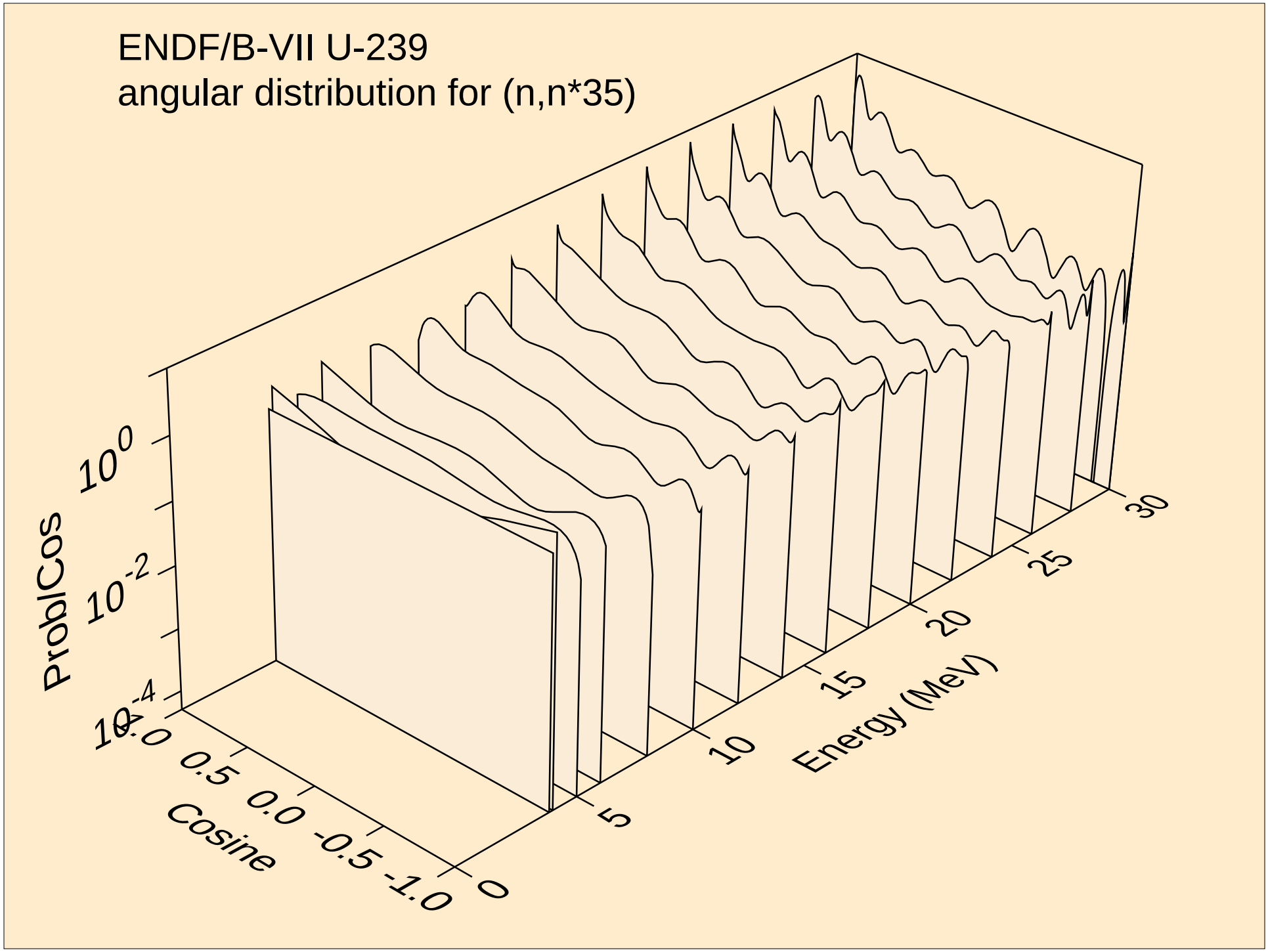
ENDF/B-VII U-239
angular distribution for (n,n*35)
Prob/Cos
10^{0}
10^{-2}
10^{-4}
1.0
0.5
0.0
-0.5
-1.0
Cosine
0
5
10
15
20
25
30
Energy (MeV)

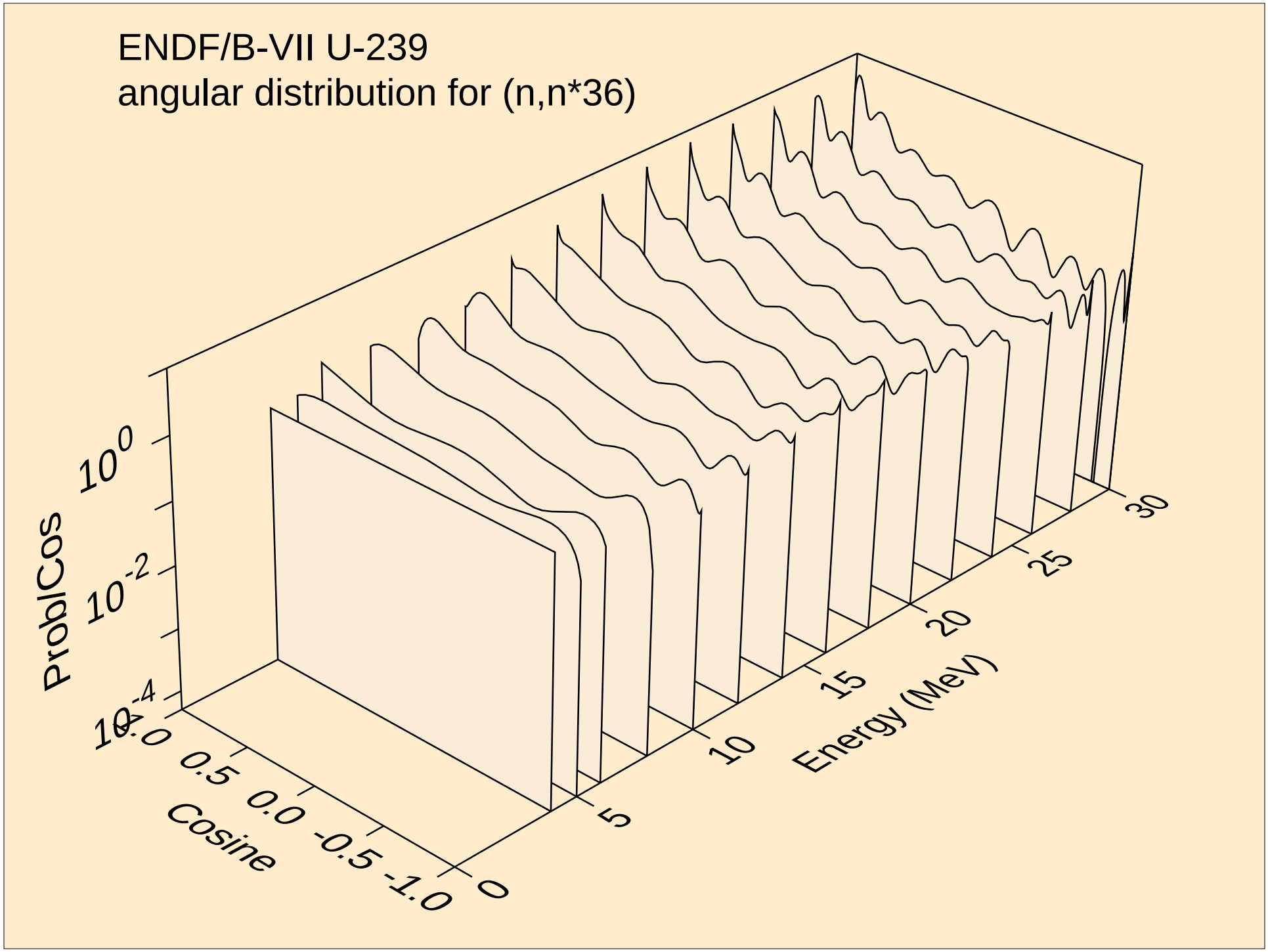
ENDF/B-VII U-239
angular distribution for (n,n*36)
Prob/Cos
10^{0}
10^{-2}
10^{-4}
1.0
0.5
0.0
-0.5
-1.0
Cosine
0
5
10
15
20
25
30
Energy (MeV)

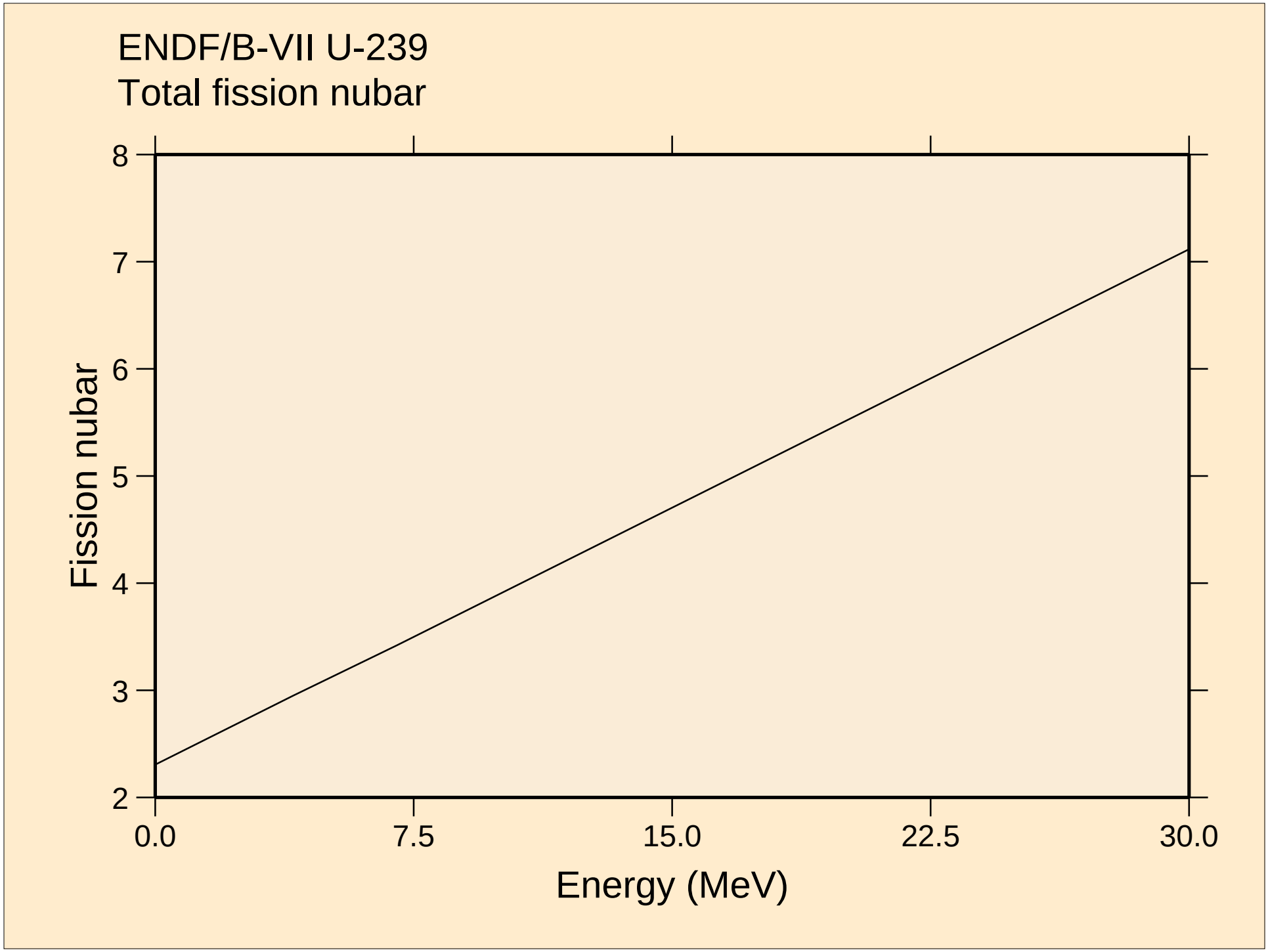
ENDF/B-VII U-239
Total fission nubar
Fission nubar
8
7
6
5
4
3
2
0.0
7.5
15.0
22.5
30.0
Energy (MeV)

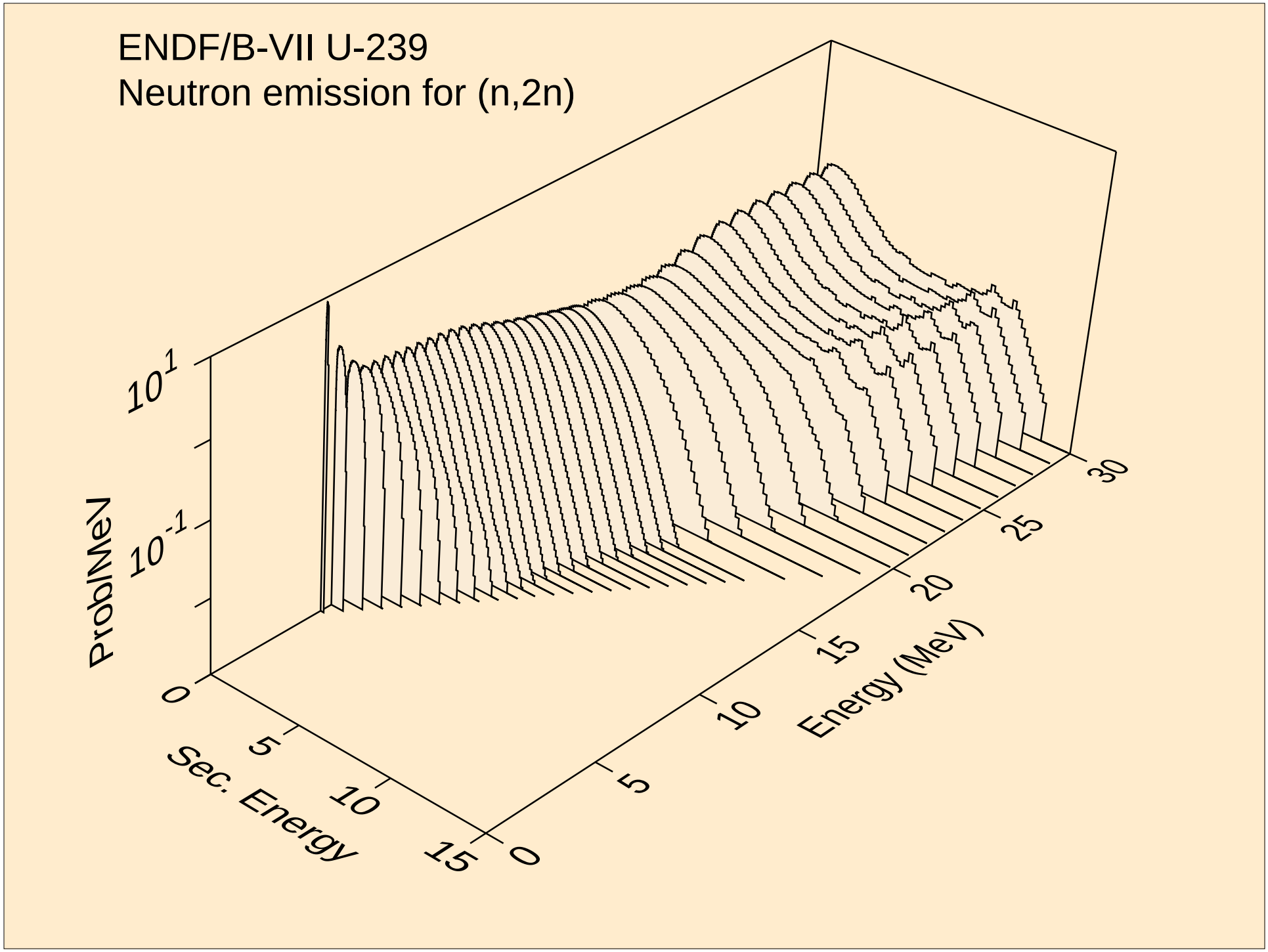
ENDF/B-VII U-239
Neutron emission for (n,2n)
Prob/MeV
10^{1}
10^{-1}
0
Sec. Energy
5
10
15
0
5
10
15
20
25
30
Energy (MeV)

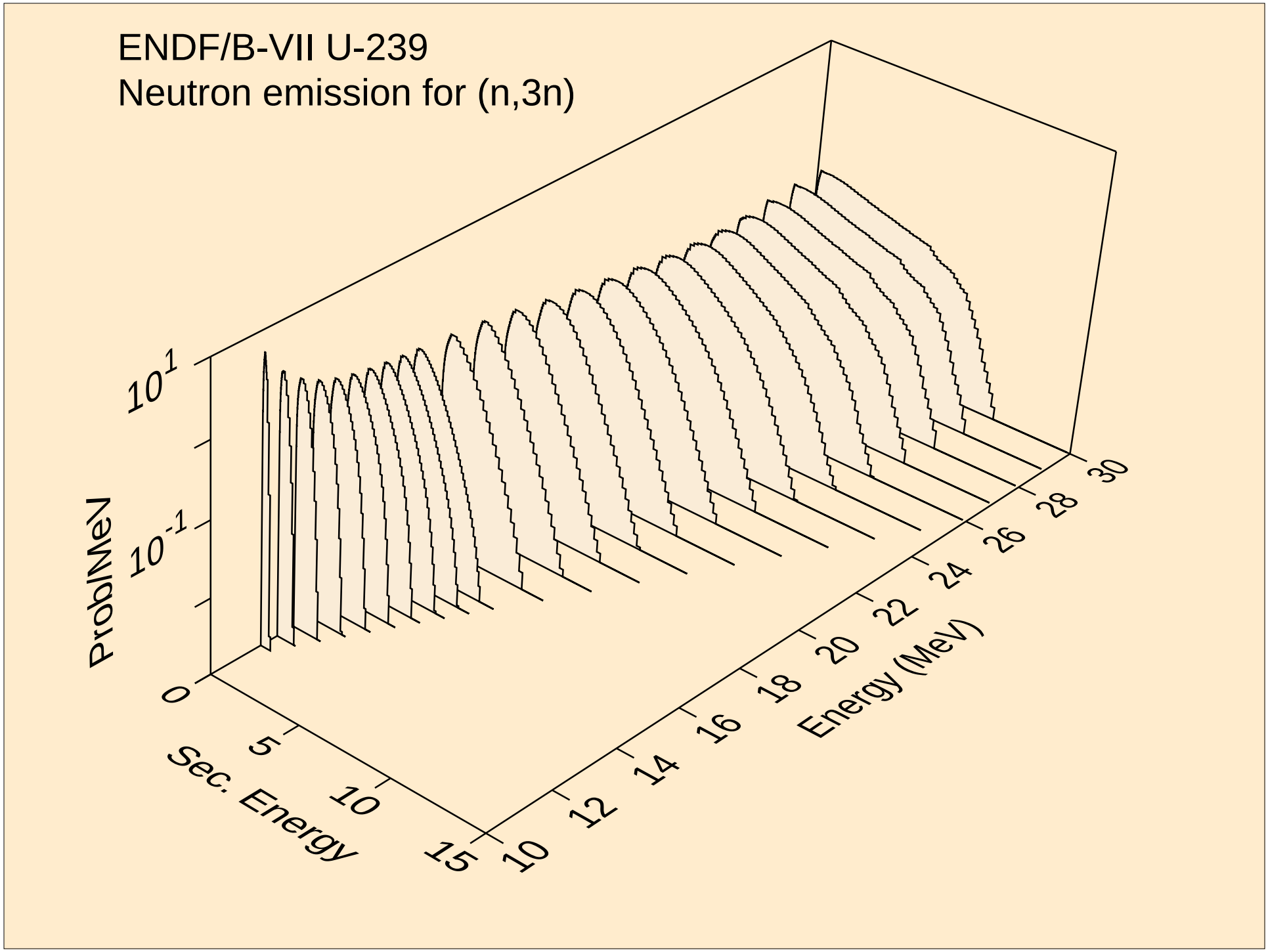
ENDF/B-VII U-239
Neutron emission for (n,3n)
Prob/MeV
10^{1}
10^{-1}
0
Sec. Energy
5
10
15
Energy (MeV)
10
12
14
16
18
20
22
24
26
28
30

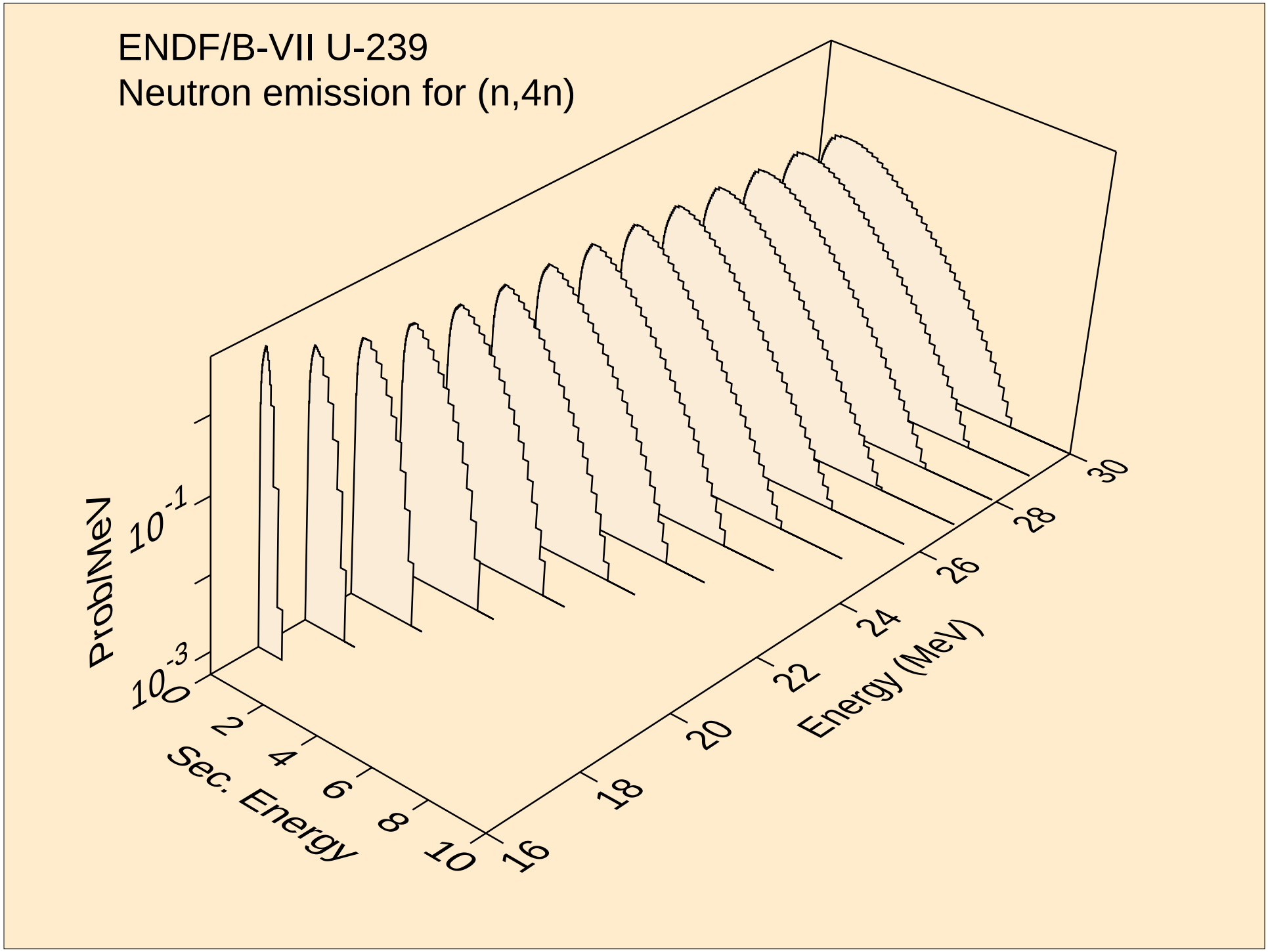
ENDF/B-VII U-239
Neutron emission for (n,4n)
Prob/MeV
10^{-1}
10^{-3}
0
2
4
6
8
10
Sec. Energy
16
18
20
22
24
26
28
30
Energy (MeV)

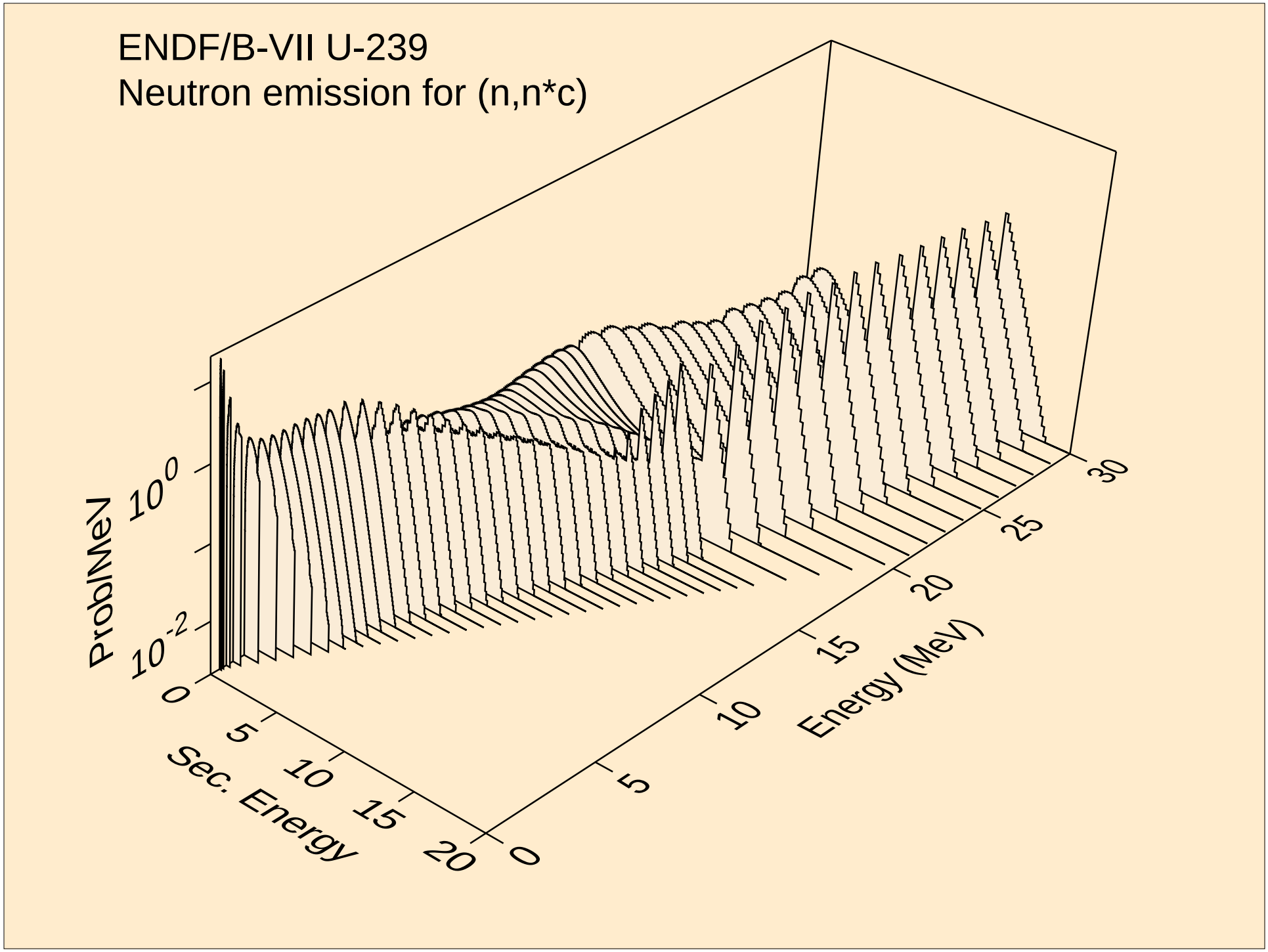
ENDF/B-VII U-239
Neutron emission for (n,n*c)
Prob/MeV
10^0
10^{-2}
0
5
10
15
20
Sec. Energy
0
5
10
15
20
25
30
Energy (MeV)

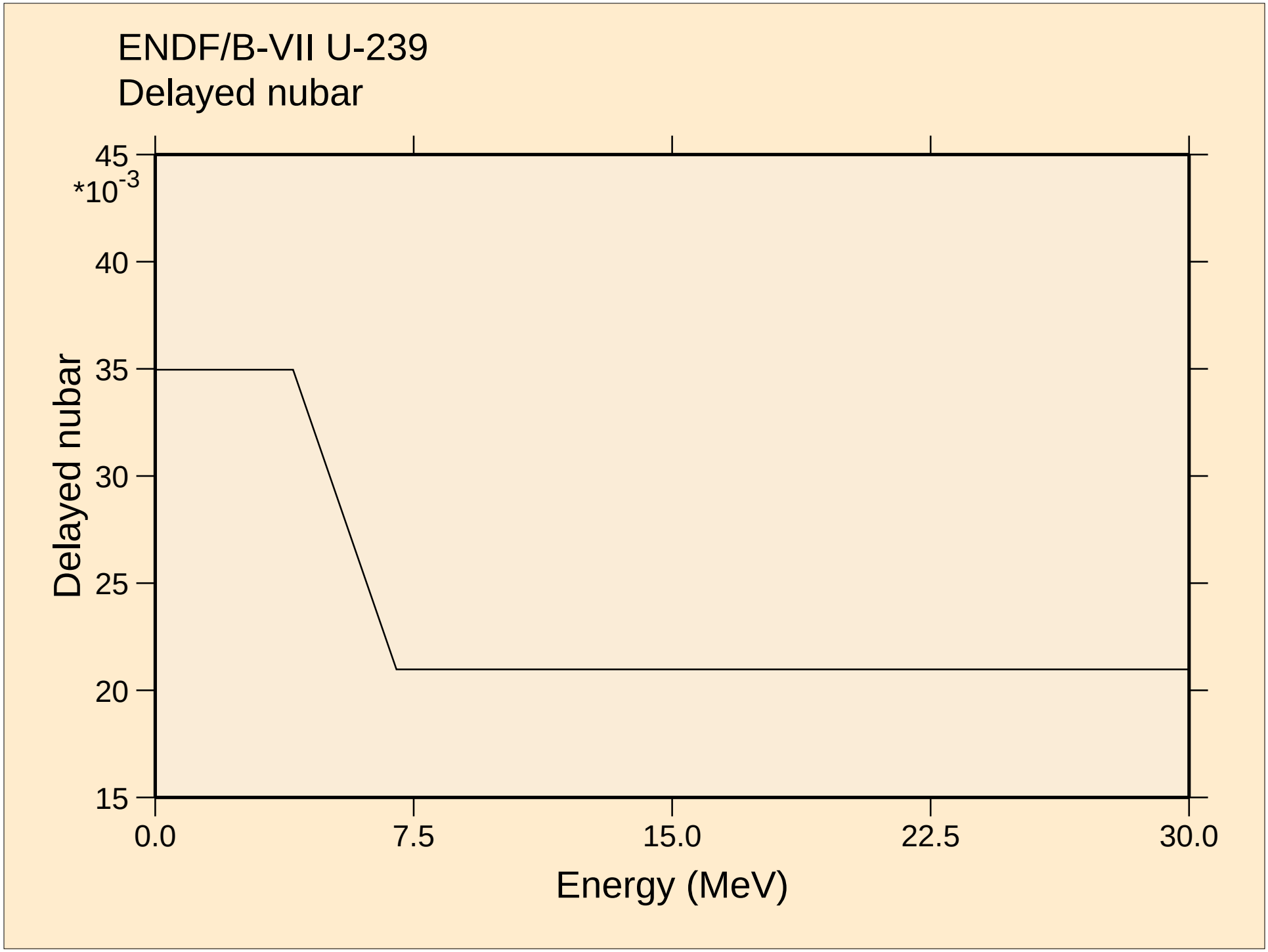
ENDF/B-VII U-239
Delayed nubar
45
*10-3
40
35
30
25
20
15
Delayed nubar
0.0
7.5
15.0
22.5
30.0
Energy (MeV)

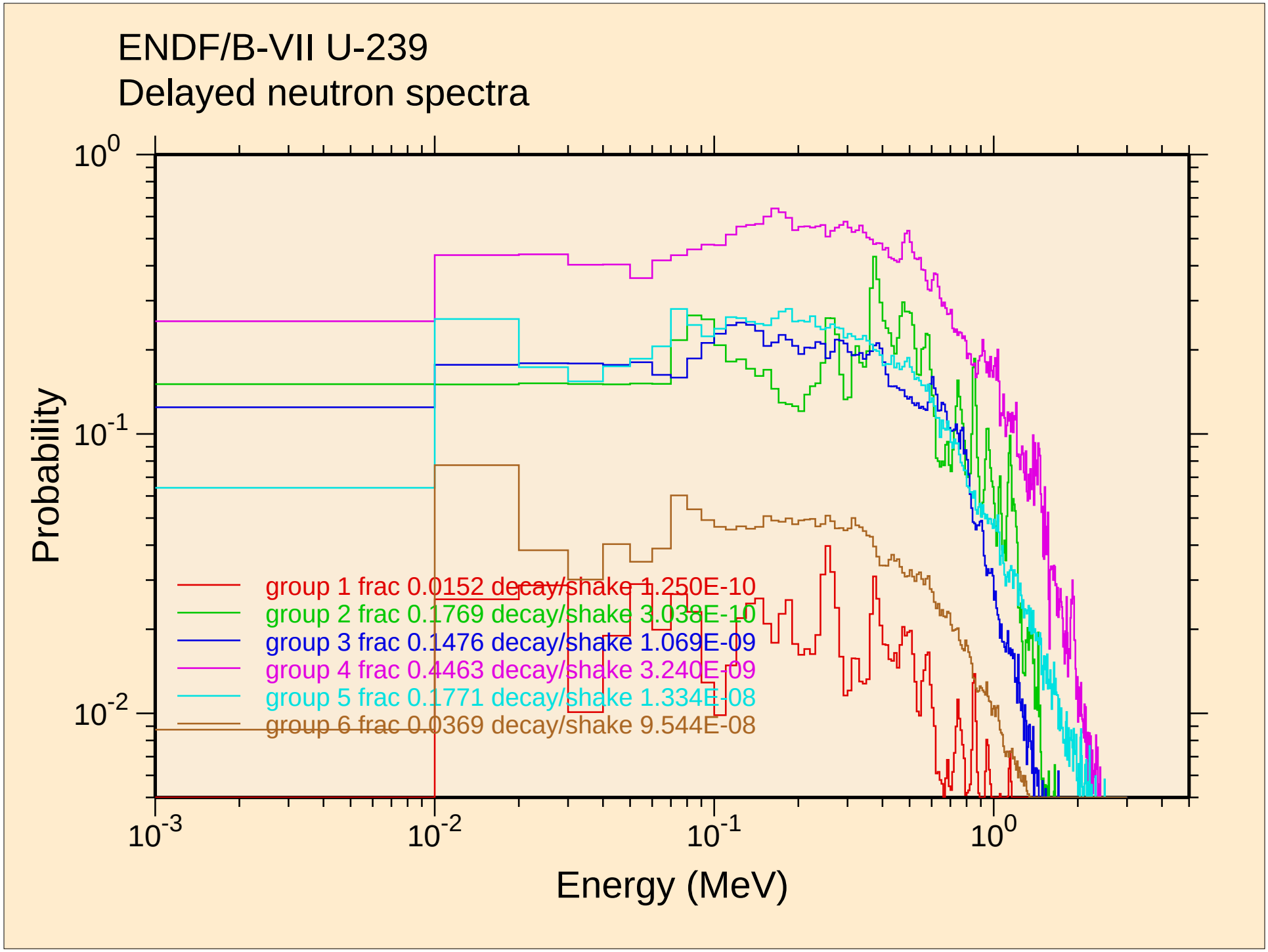
ENDF/B-VII U-239
Delayed neutron spectra
Probability
Energy (MeV)
10^0
10^{-1}
10^{-2}
10^{-3}
10^{-2}
10^{-1}
10^0
group 1 frac 0.0152 decay/shake 1.250E-10
group 2 frac 0.1769 decay/shake 3.038E-10
group 3 frac 0.1476 decay/shake 1.069E-09
group 4 frac 0.4463 decay/shake 3.240E-09
group 5 frac 0.1771 decay/shake 1.334E-08
group 6 frac 0.0369 decay/shake 9.544E-08

ENDF/B-VII U-239
Photon emission for fission

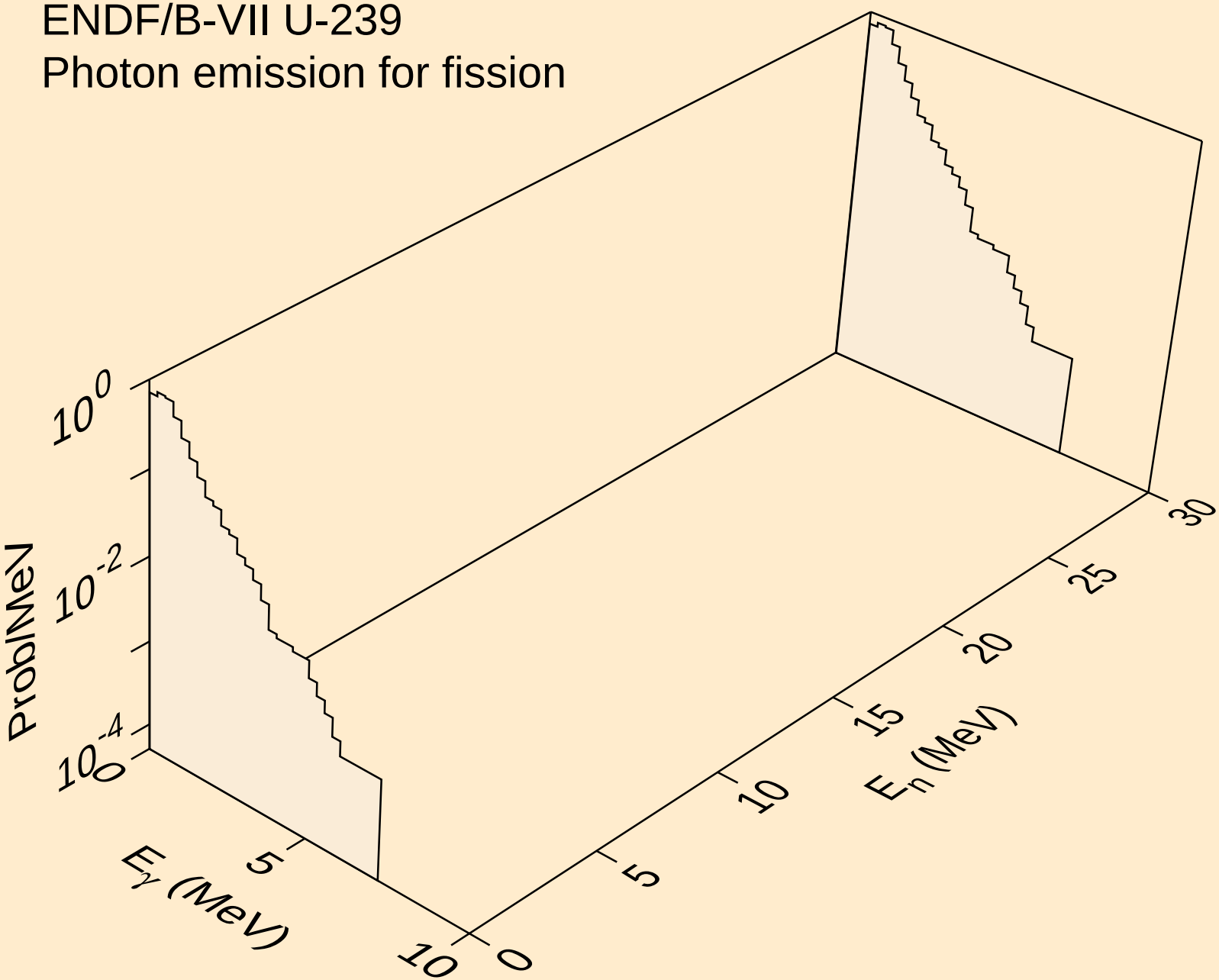

ENDF/B-VII U-239
Photon emission for (n,gma)

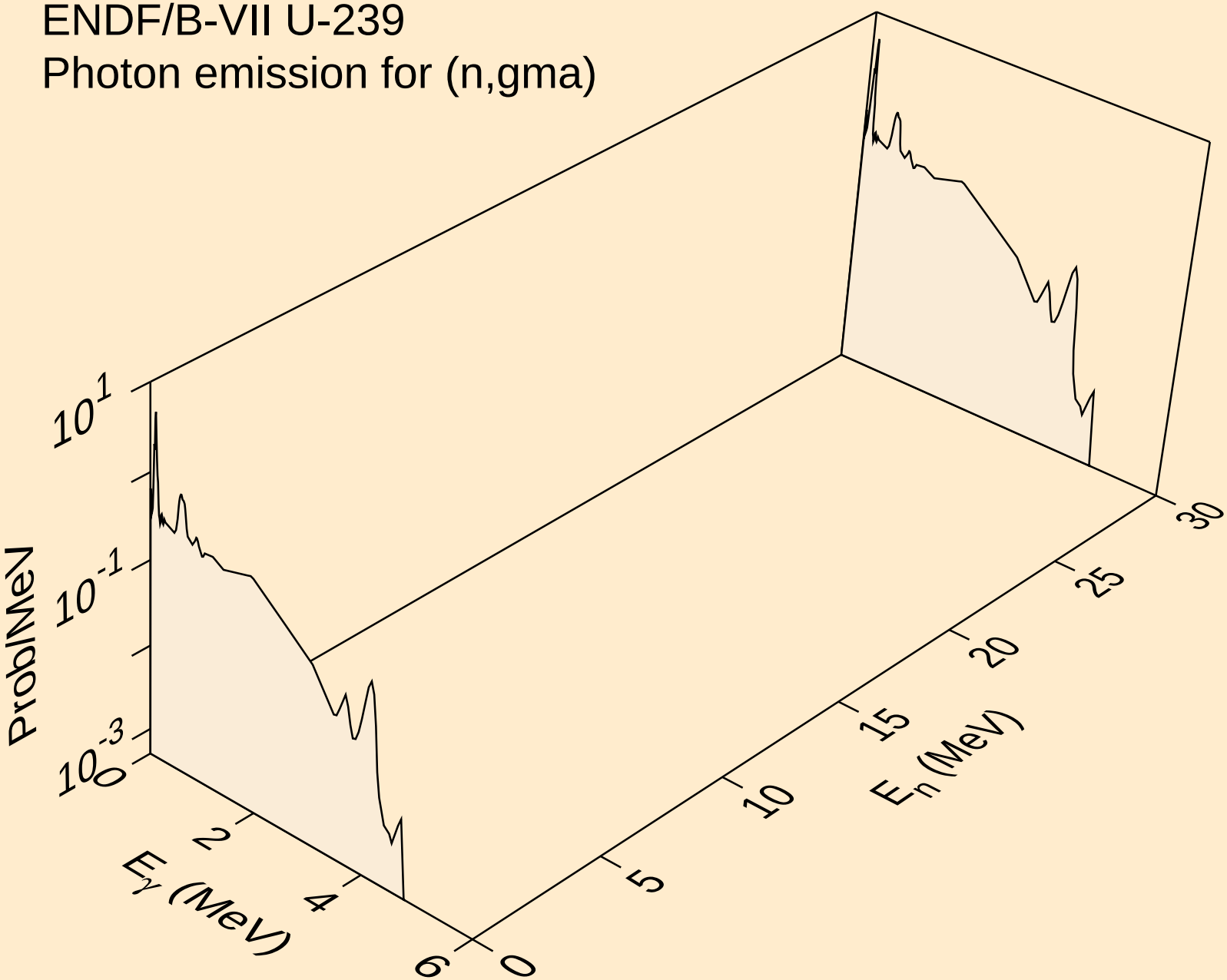

ENDF/B-VII U-239
Photon emission for nonelastic

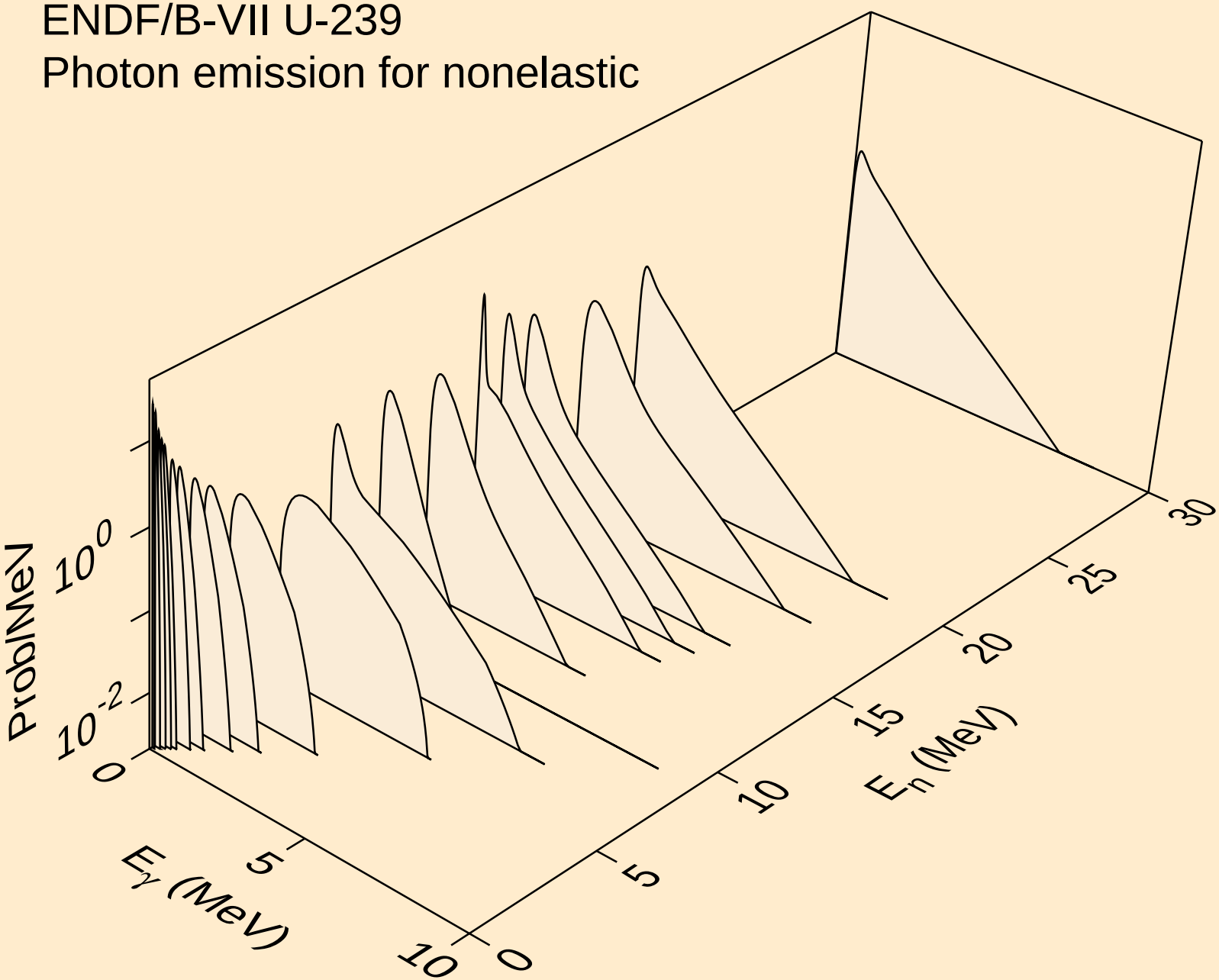

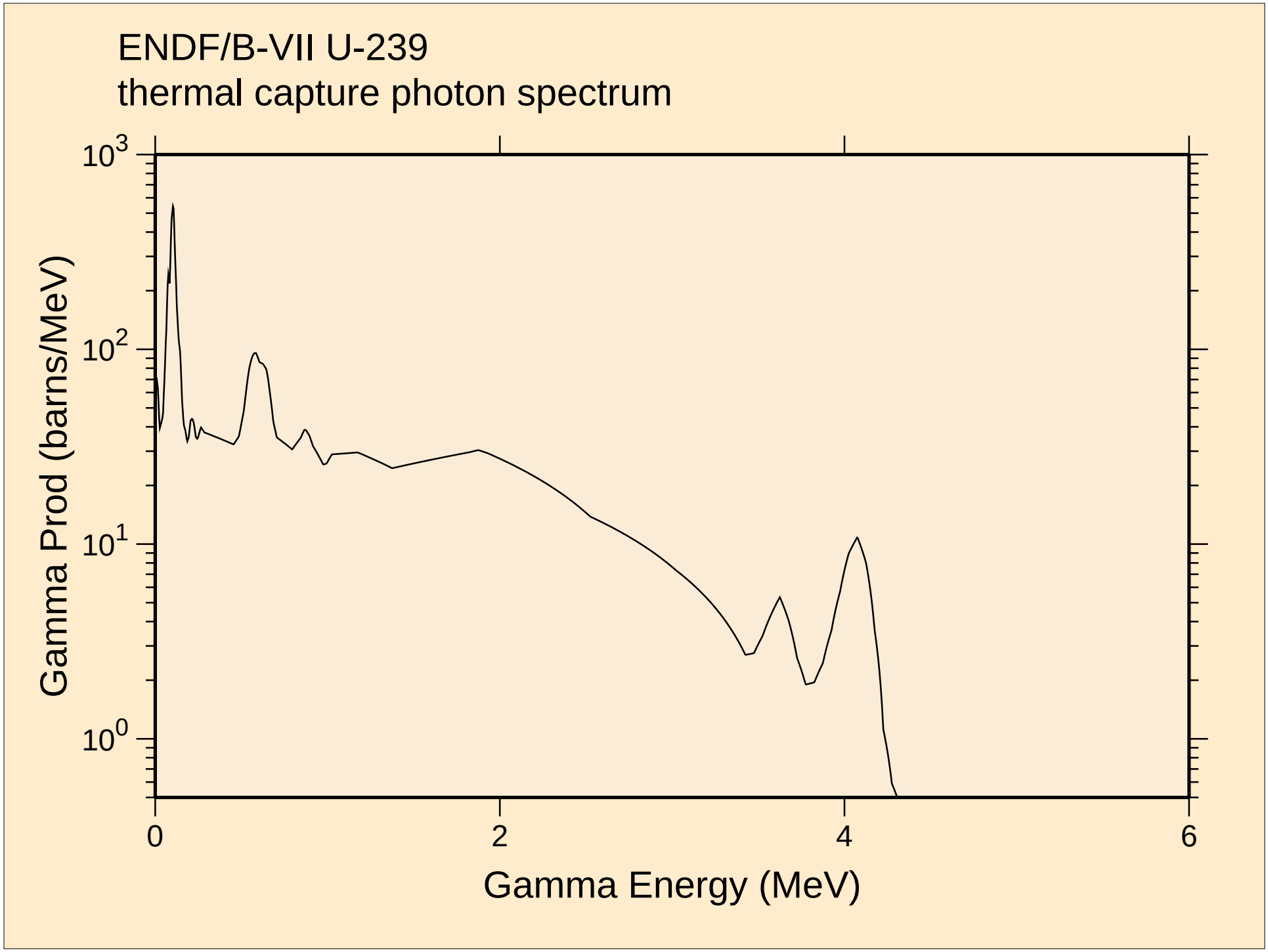
ENDF/B-VII U-239
thermal capture photon spectrum
Gamma Prod (barns/MeV)
10^3
10^2
10^1
10^0
0
2
4
6
Gamma Energy (MeV)

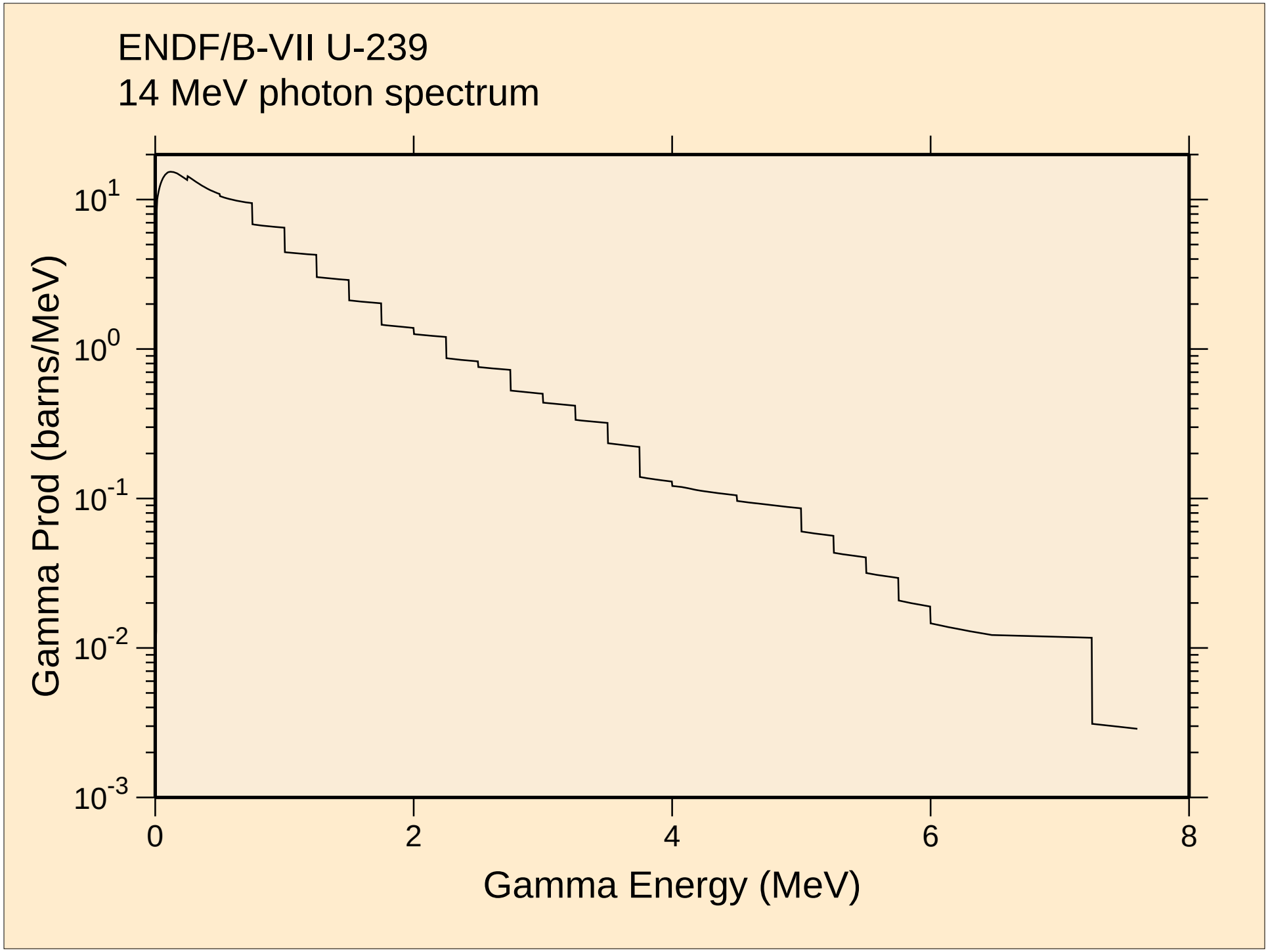
ENDF/B-VII U-239
14 MeV photon spectrum
Gamma Prod (barns/MeV)
10^1
10^0
10^-1
10^-2
10^-3
0
2
4
6
8
Gamma Energy (MeV)