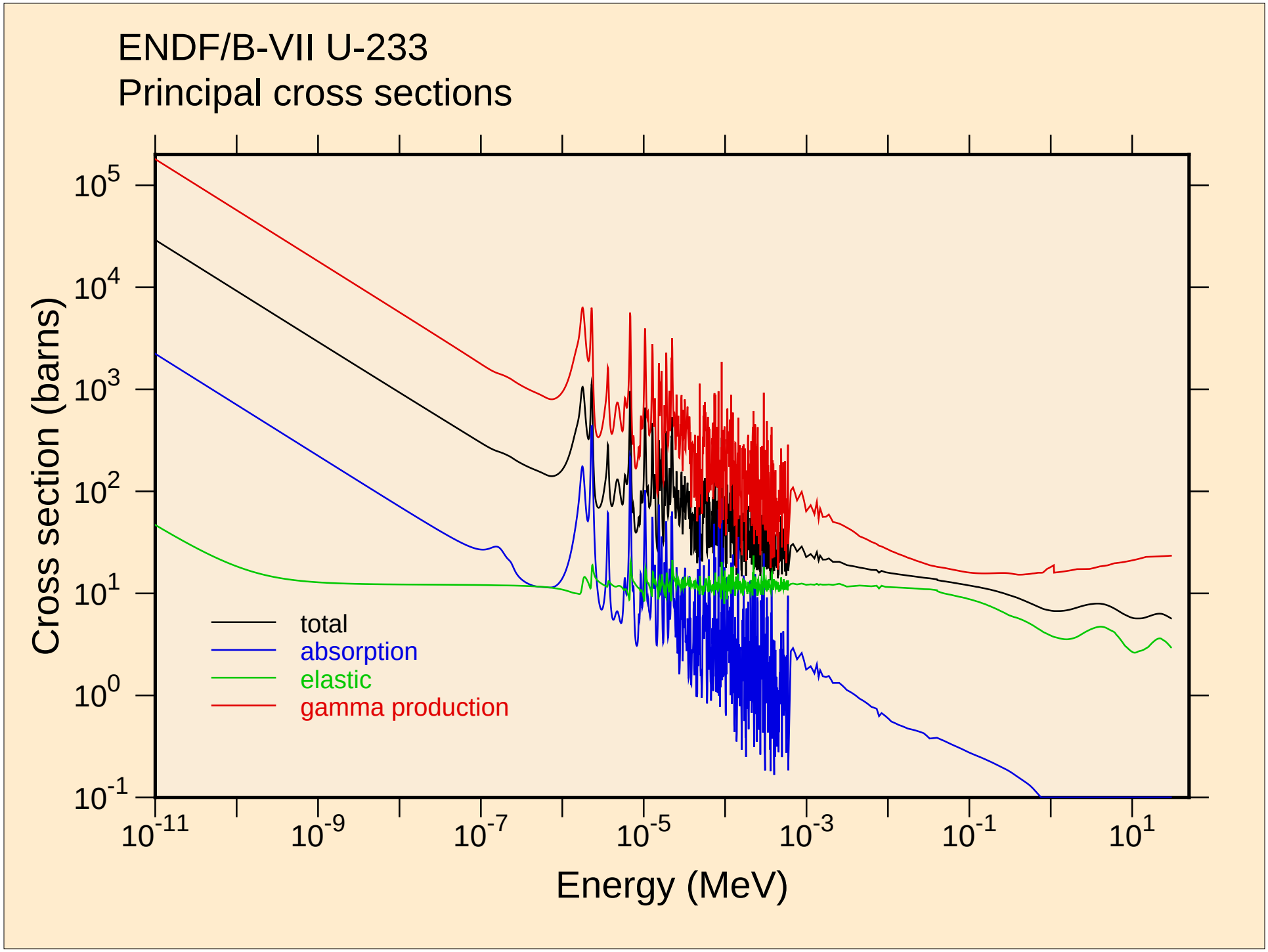
ENDF/B-VII U-233
Principal cross sections
Cross section (barns)
Energy (MeV)
total
absorption
elastic
gamma production
$10^{5}$
$10^{4}$
$10^{3}$
$10^{2}$
$10^{1}$
$10^{0}$
$10^{-1}$
$10^{-11}$
$10^{-9}$
$10^{-7}$
$10^{-5}$
$10^{-3}$
$10^{-1}$
$10^{1}$

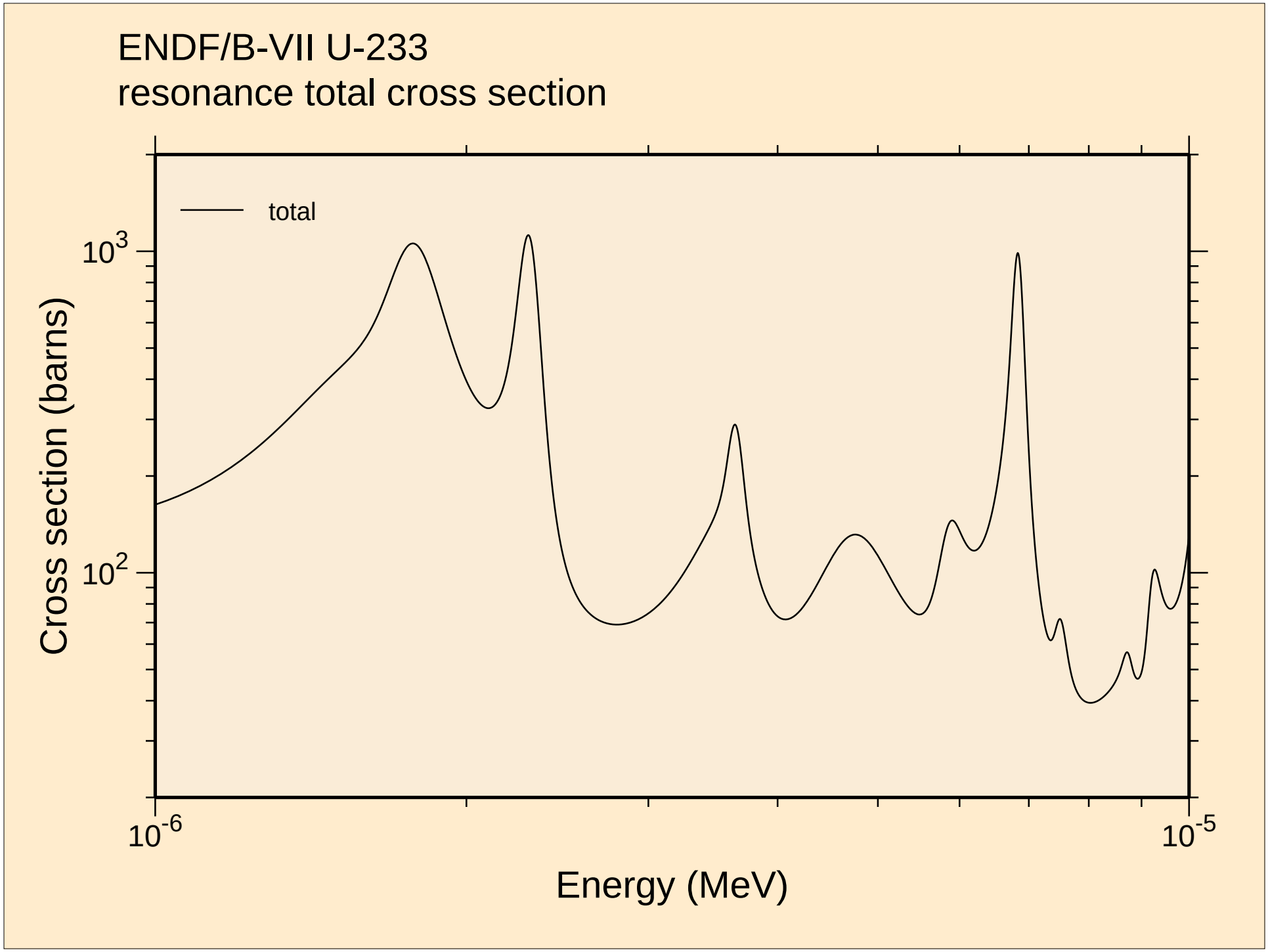
ENDF/B-VII U-233
resonance total cross section
total
Cross section (barns)
$10^3$
$10^2$
$10^{-6}$
$10^{-5}$
Energy (MeV)

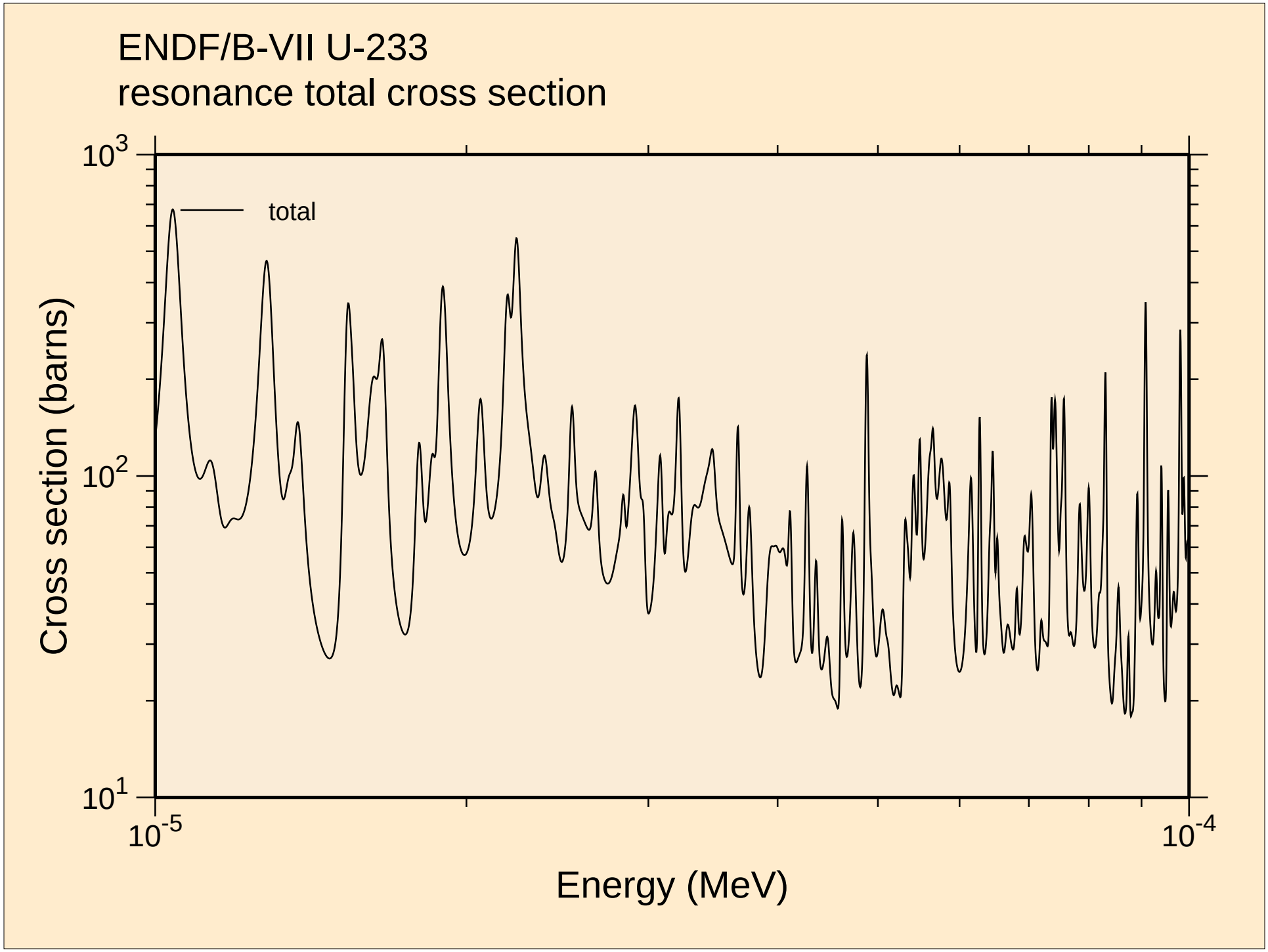
ENDF/B-VII U-233
resonance total cross section
total
Cross section (barns)
$10^3$
$10^2$
$10^1$
$10^{-5}$
$10^{-4}$
Energy (MeV)

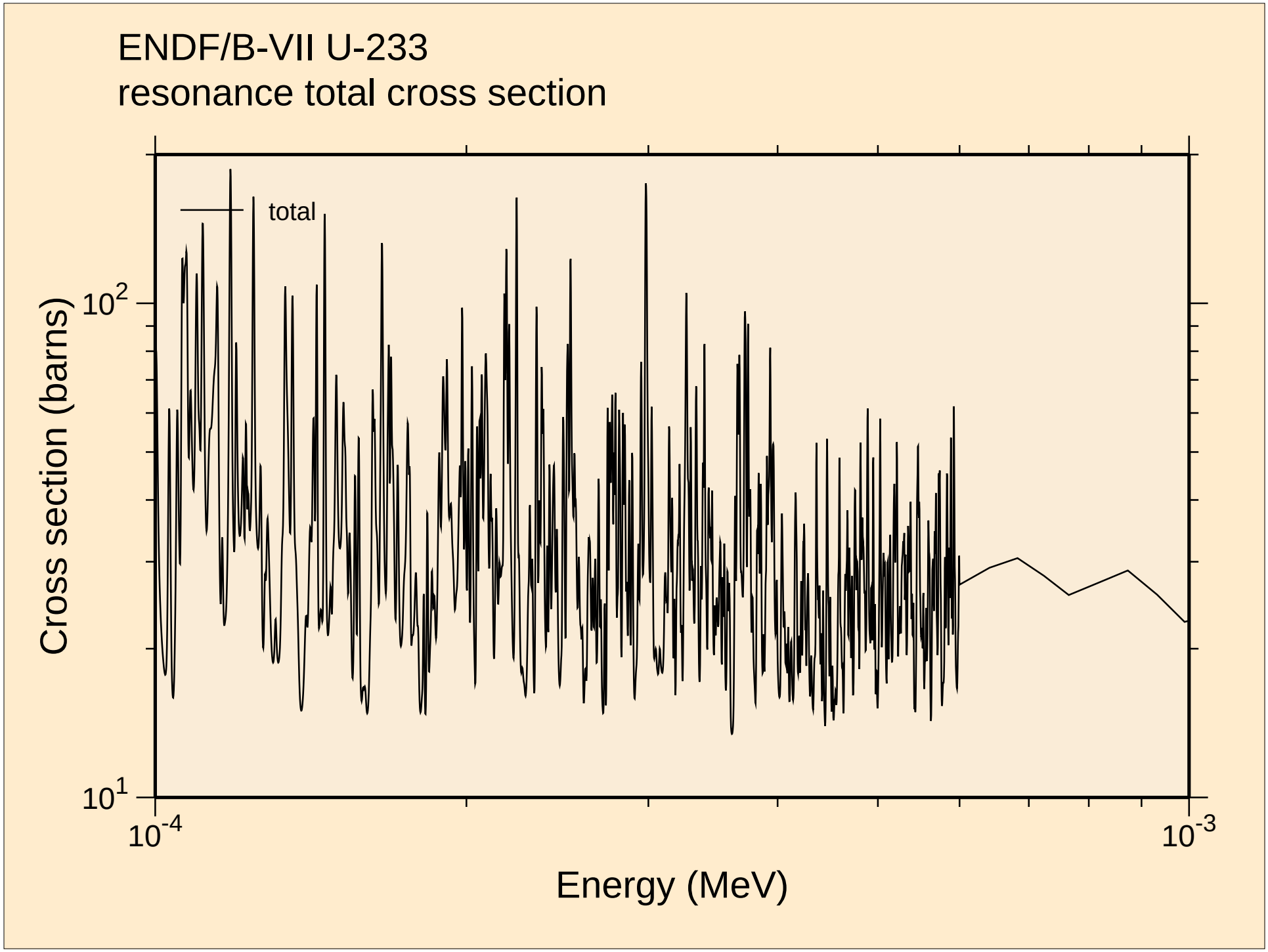
ENDF/B-VII U-233
resonance total cross section
total
Cross section (barns)
$10^2$
$10^1$
$10^{-4}$
$10^{-3}$
Energy (MeV)

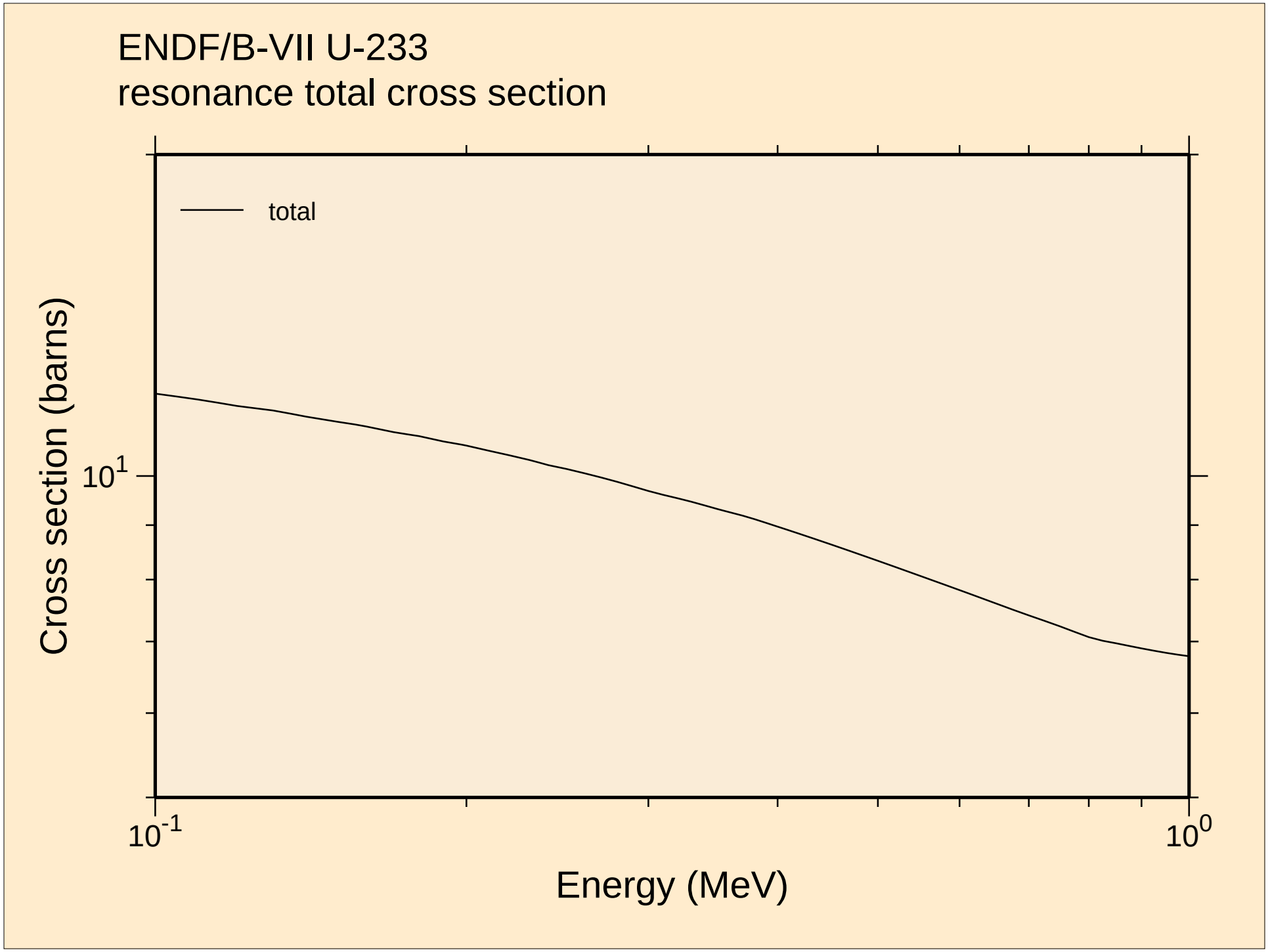
ENDF/B-VII U-233
resonance total cross section
total
Cross section (barns)
$10^1$
$10^{-1}$
$10^0$
Energy (MeV)

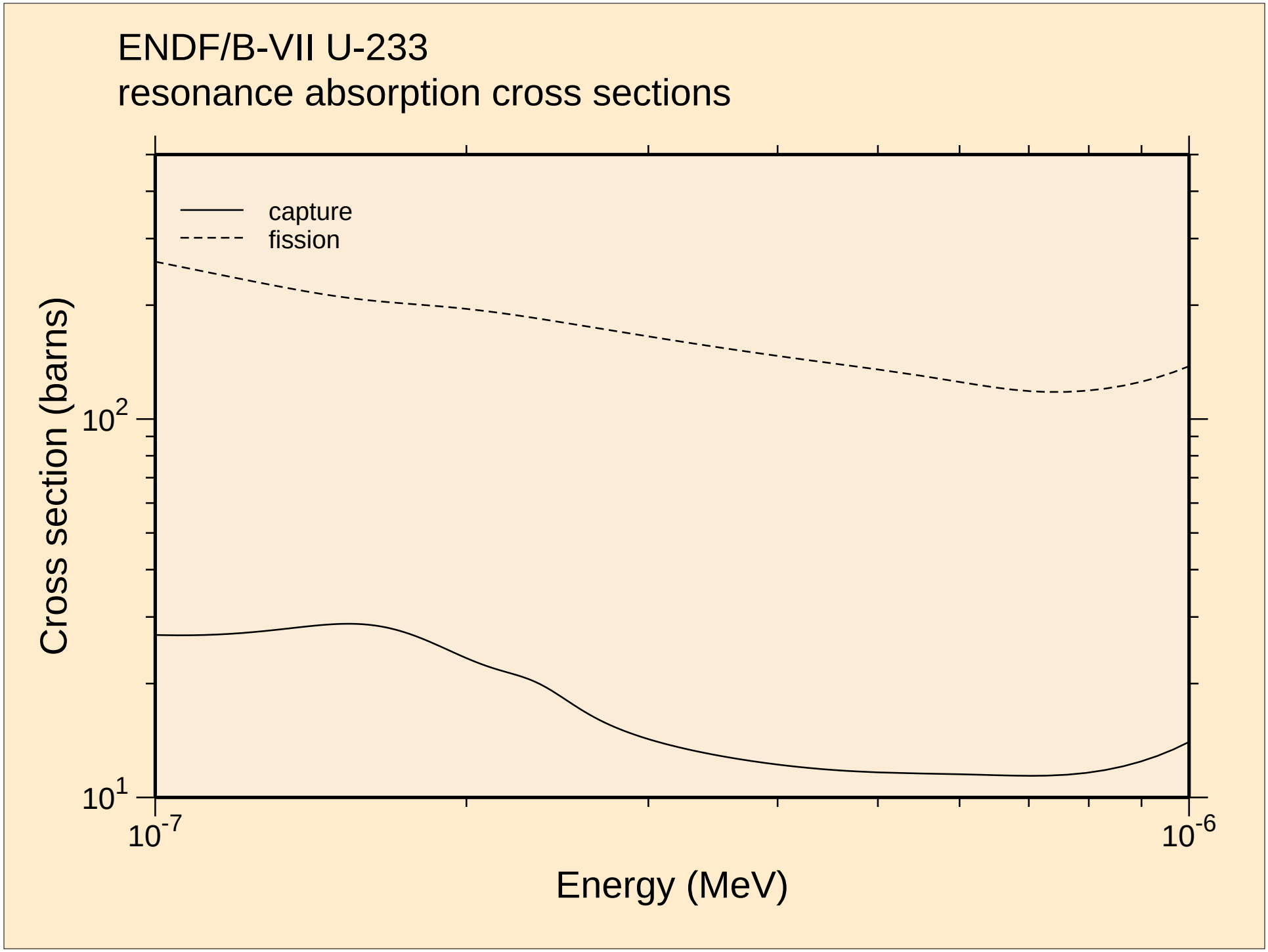
ENDF/B-VII U-233
resonance absorption cross sections
capture
fission
Cross section (barns)
$10^2$
$10^1$
$10^{-7}$
$10^{-6}$
Energy (MeV)

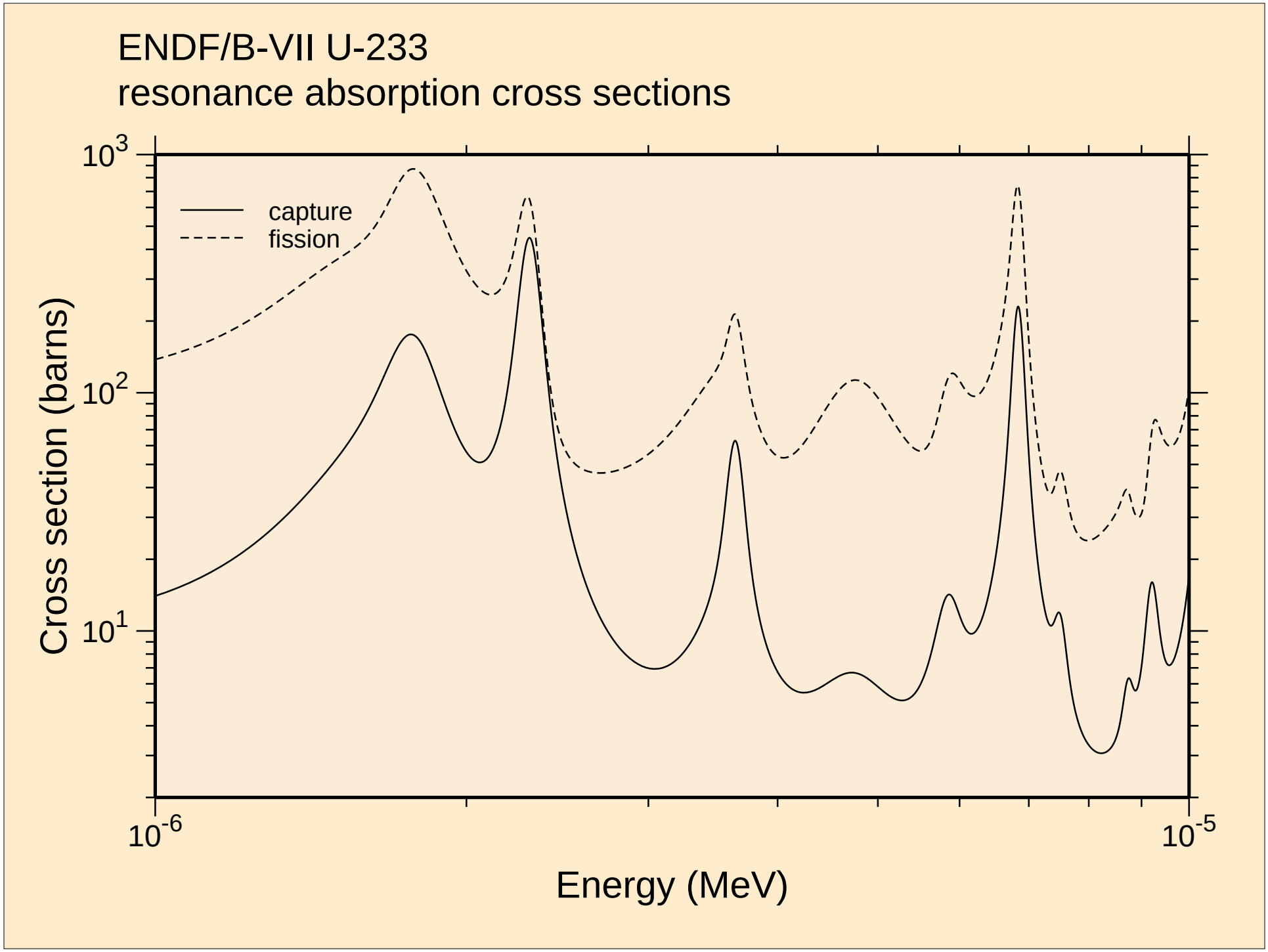
ENDF/B-VII U-233
resonance absorption cross sections
capture
fission
Cross section (barns)
$10^3$
$10^2$
$10^1$
$10^{-6}$
$10^{-5}$
Energy (MeV)

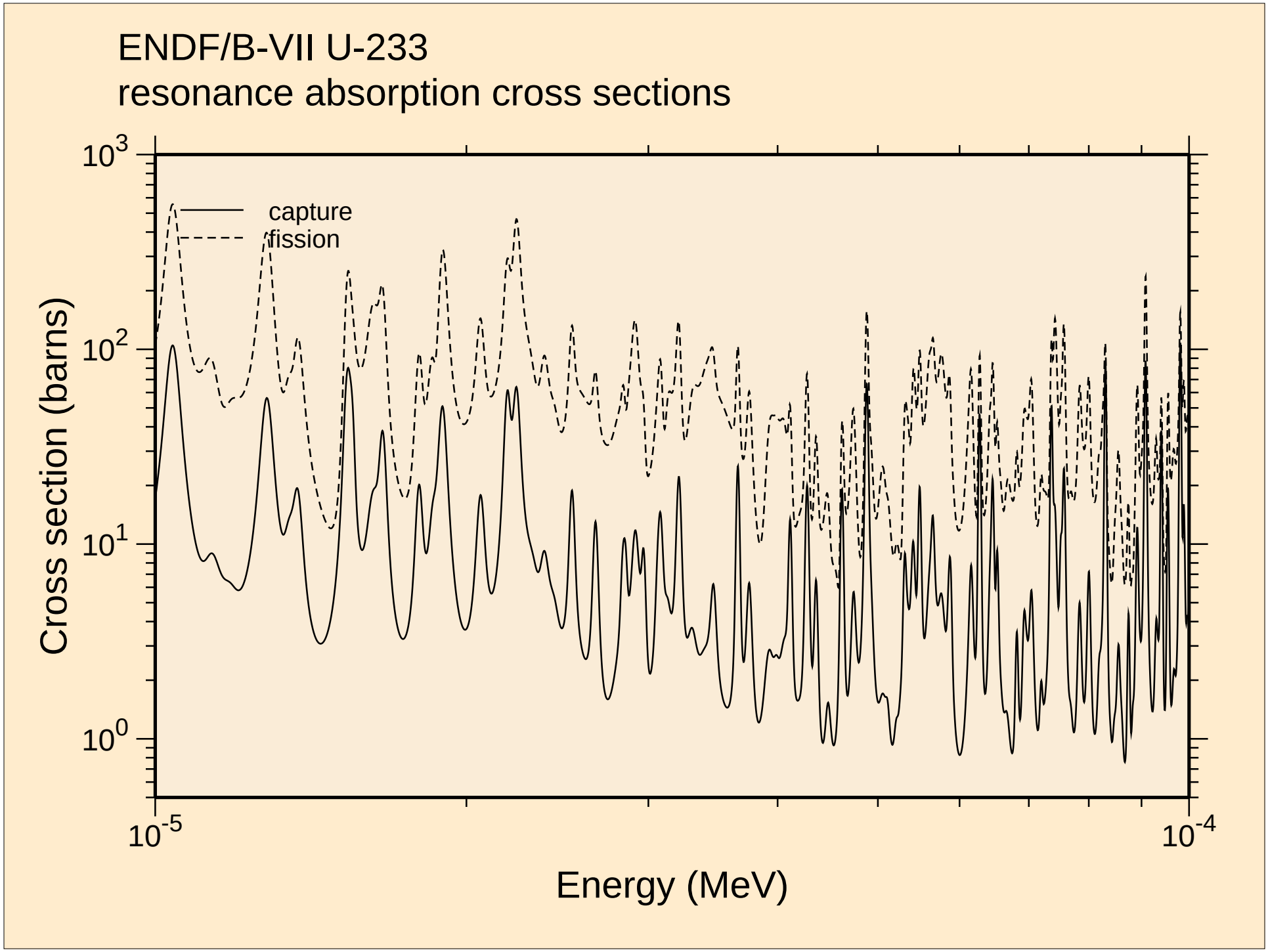
ENDF/B-VII U-233
resonance absorption cross sections
capture
fission
Cross section (barns)
$10^3$
$10^2$
$10^1$
$10^0$
$10^{-5}$
$10^{-4}$
Energy (MeV)

ENDF/B-VII U-233
resonance absorption cross sections

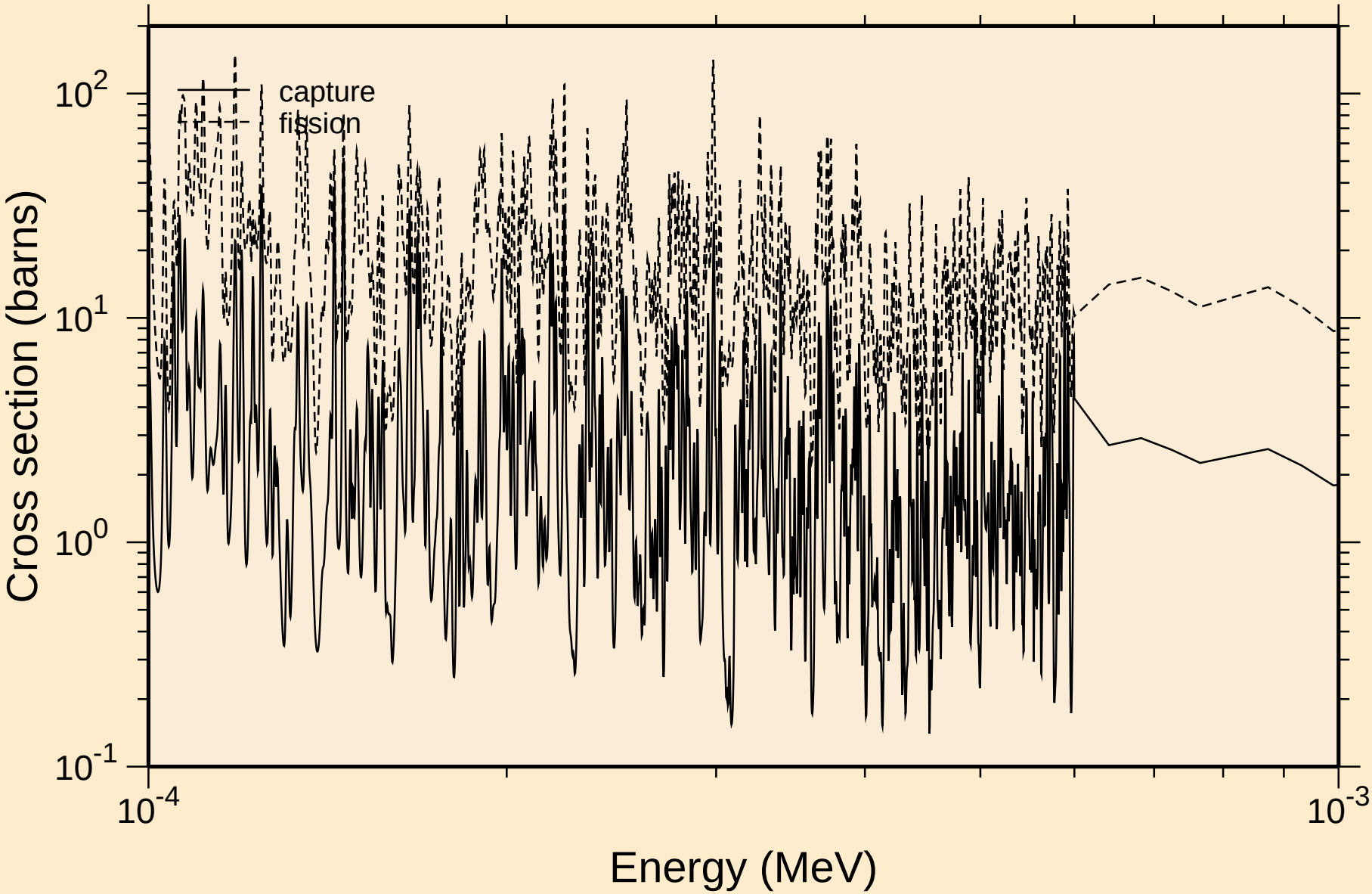

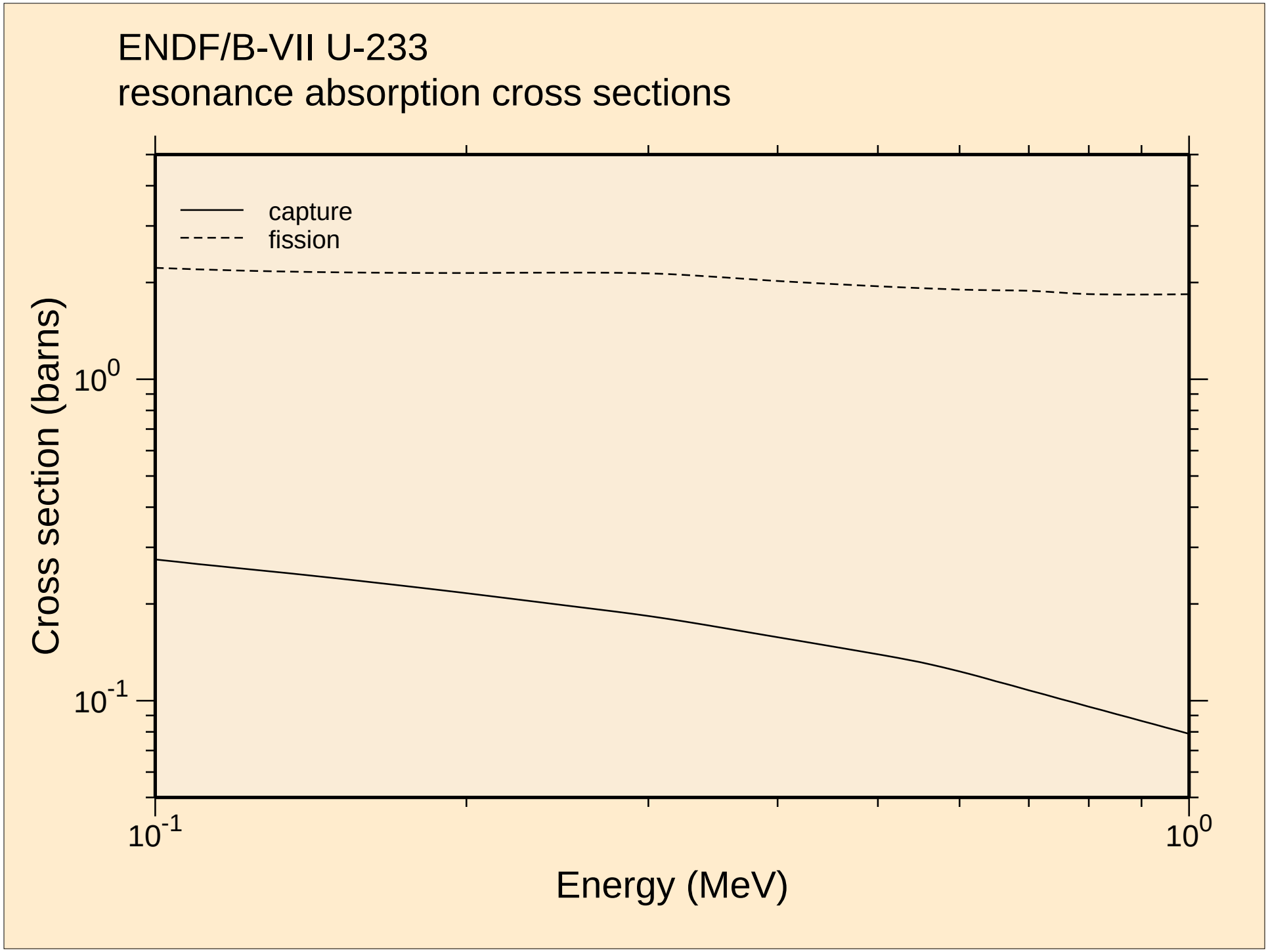
ENDF/B-VII U-233
resonance absorption cross sections
capture
fission
Cross section (barns)
$10^0$
$10^{-1}$
$10^{-1}$
$10^0$
Energy (MeV)

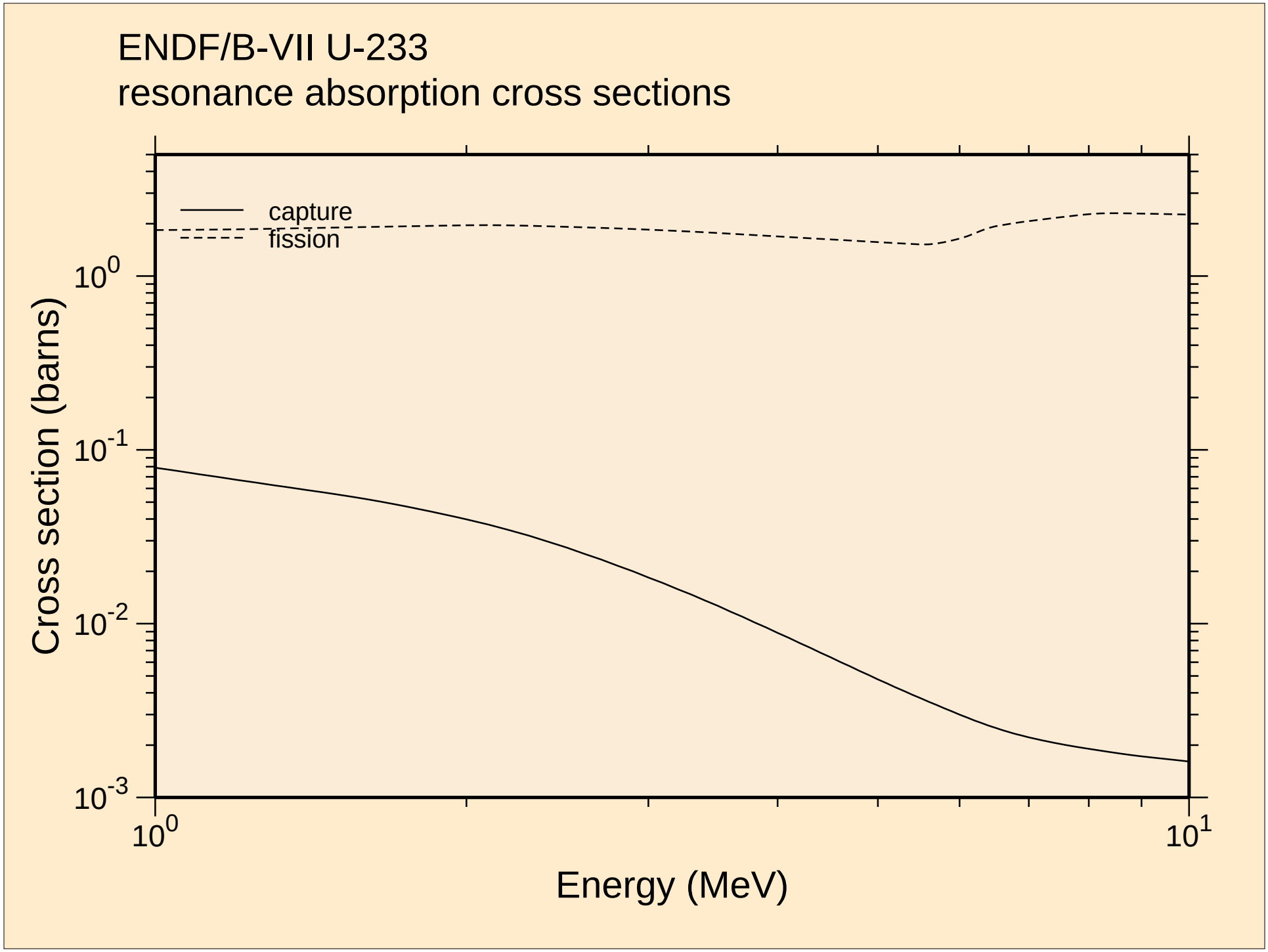
ENDF/B-VII U-233
resonance absorption cross sections
capture
fission
Cross section (barns)
$10^{0}$
$10^{-1}$
$10^{-2}$
$10^{-3}$
$10^{0}$
$10^{1}$
Energy (MeV)

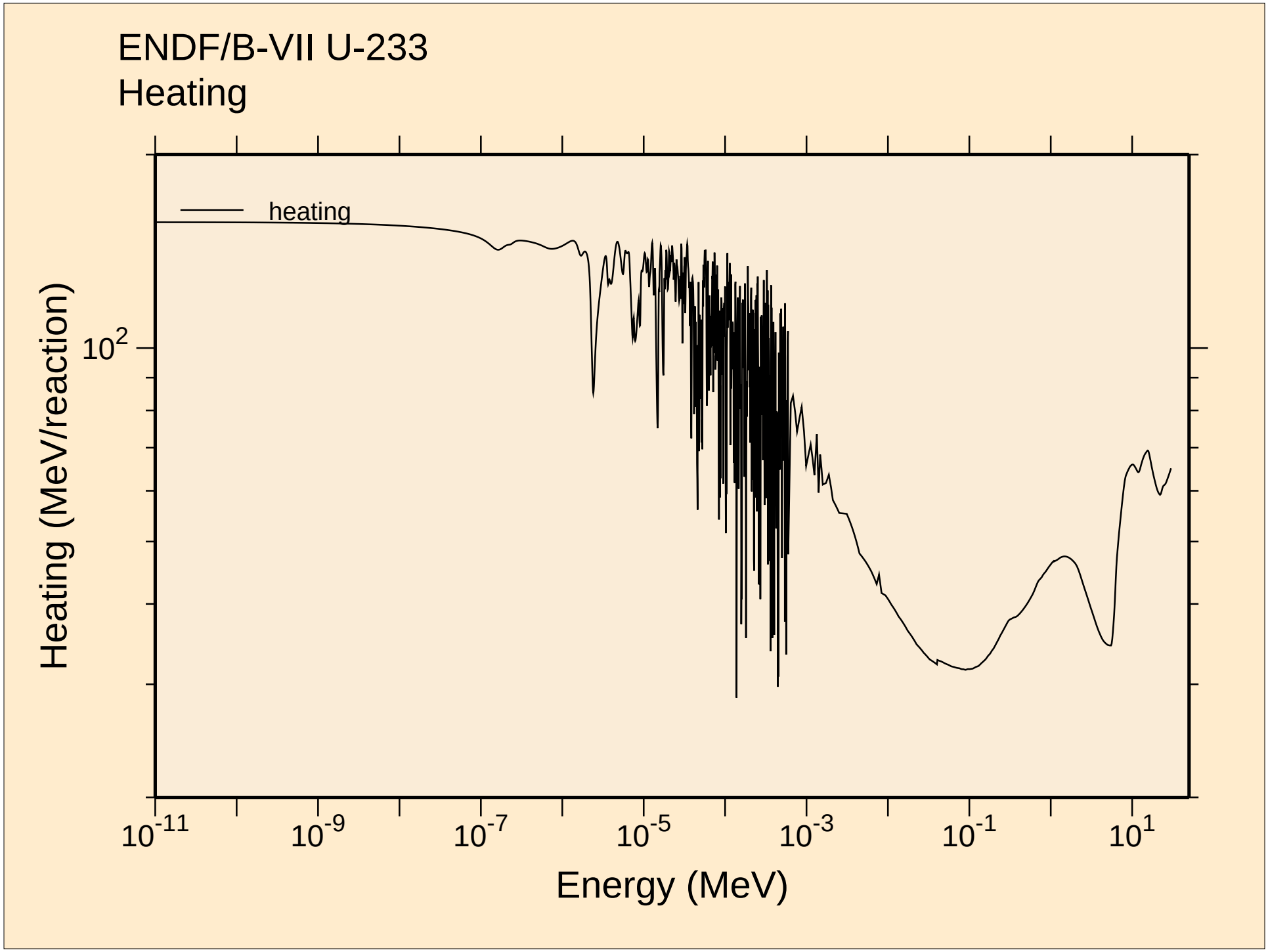
ENDF/B-VII U-233
Heating
heating
Heating (MeV/reaction)
$10^2$
$10^{-11}$
$10^{-9}$
$10^{-7}$
$10^{-5}$
$10^{-3}$
$10^{-1}$
$10^{1}$
Energy (MeV)

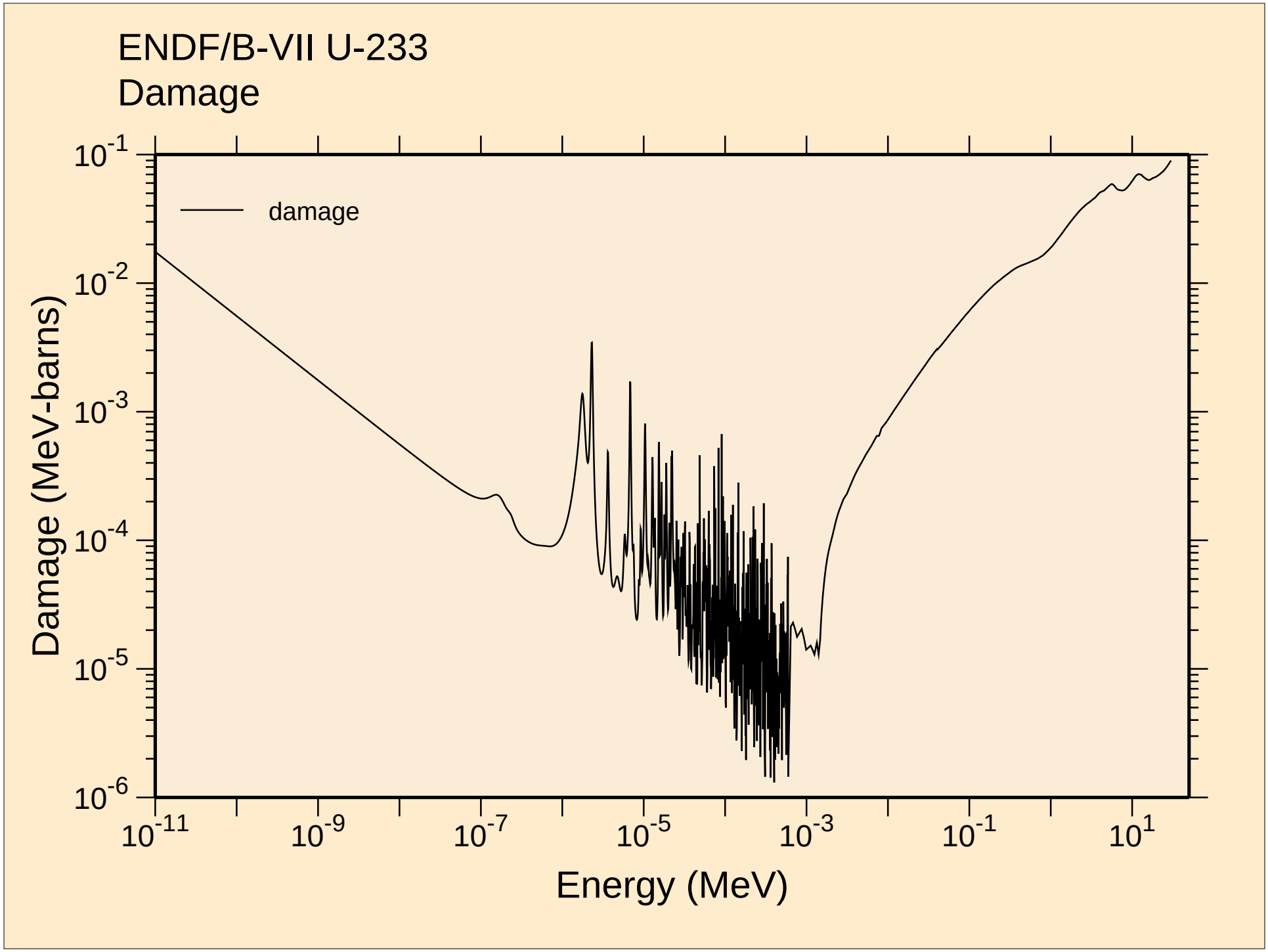
ENDF/B-VII U-233
Damage
damage
Damage (MeV-barns)
Energy (MeV)
10^-1
10^-2
10^-3
10^-4
10^-5
10^-6
10^-11
10^-9
10^-7
10^-5
10^-3
10^-1
10^1

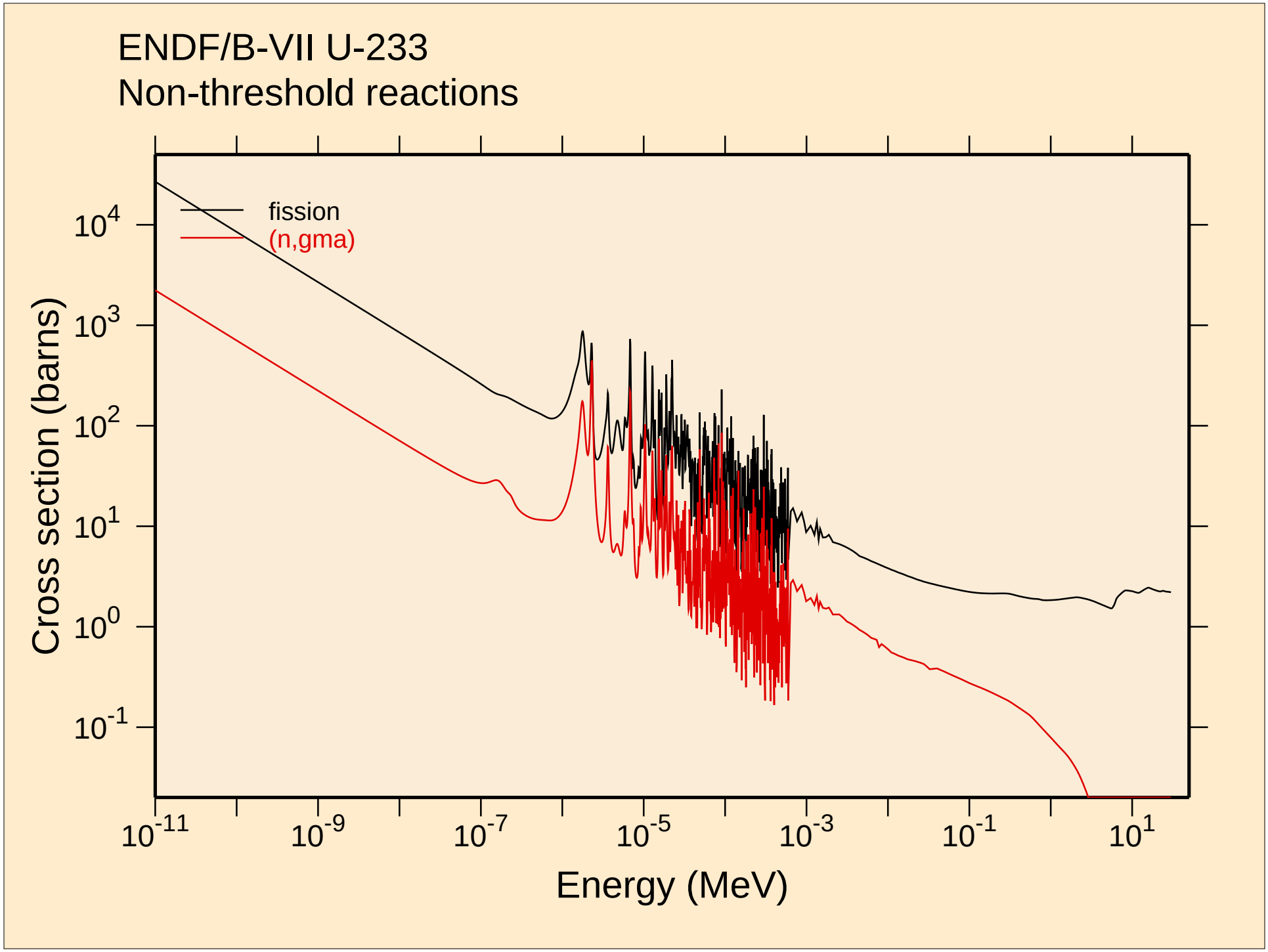
ENDF/B-VII U-233
Non-threshold reactions
fission
(n,gma)
Cross section (barns)
Energy (MeV)
10^4
10^3
10^2
10^1
10^0
10^-1
10^-11
10^-9
10^-7
10^-5
10^-3
10^-1
10^1

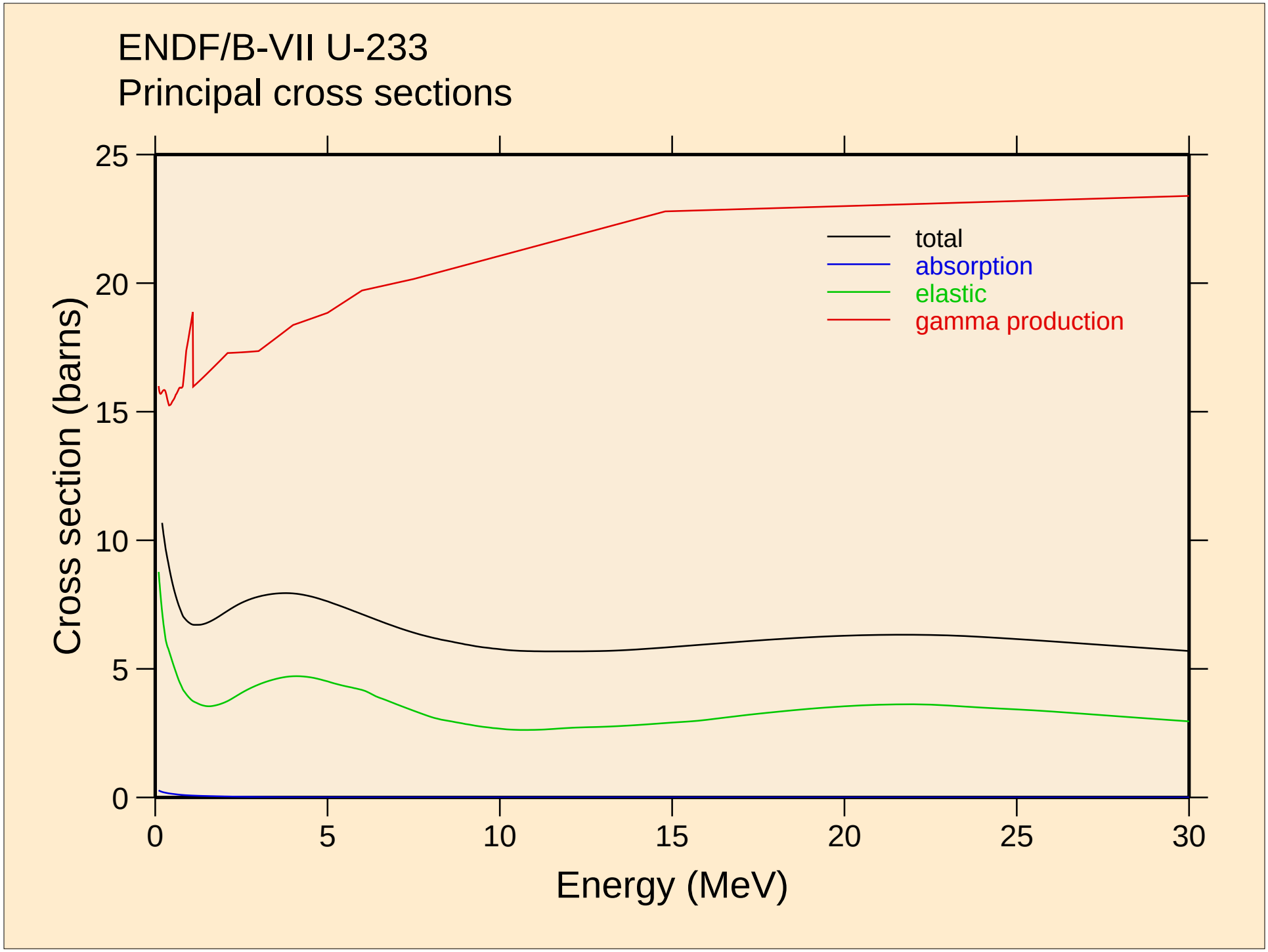
ENDF/B-VII U-233
Principal cross sections
Cross section (barns)
Energy (MeV)
total
absorption
elastic
gamma production
0
5
10
15
20
25
30

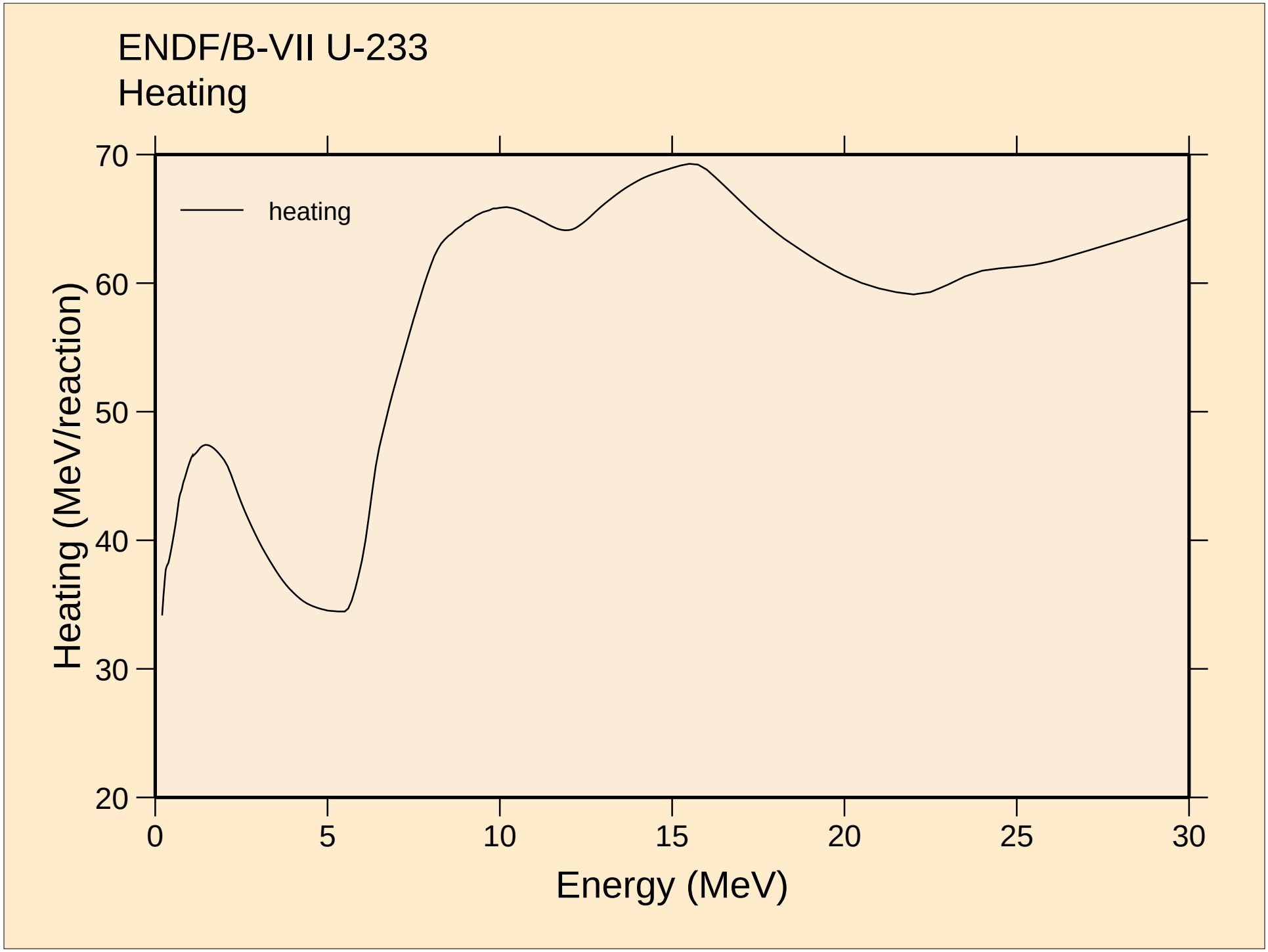
ENDF/B-VII U-233
Heating
heating
Heating (MeV/reaction)
Energy (MeV)
70
60
50
40
30
20
0
5
10
15
20
25
30

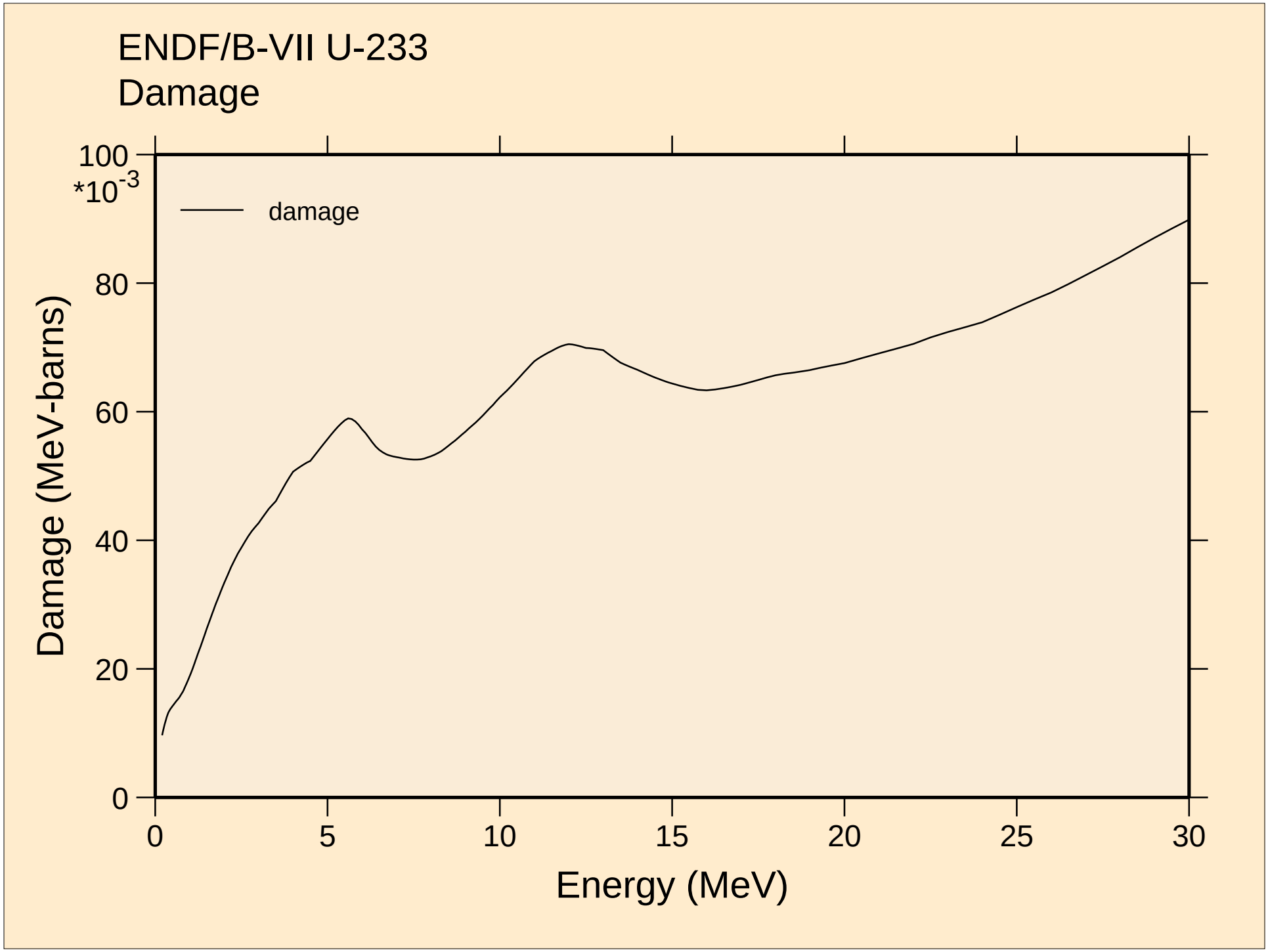
ENDF/B-VII U-233
Damage
damage
Damage (MeV-barns)
*10^-3
100
80
60
40
20
0
0
5
10
15
20
25
30
Energy (MeV)

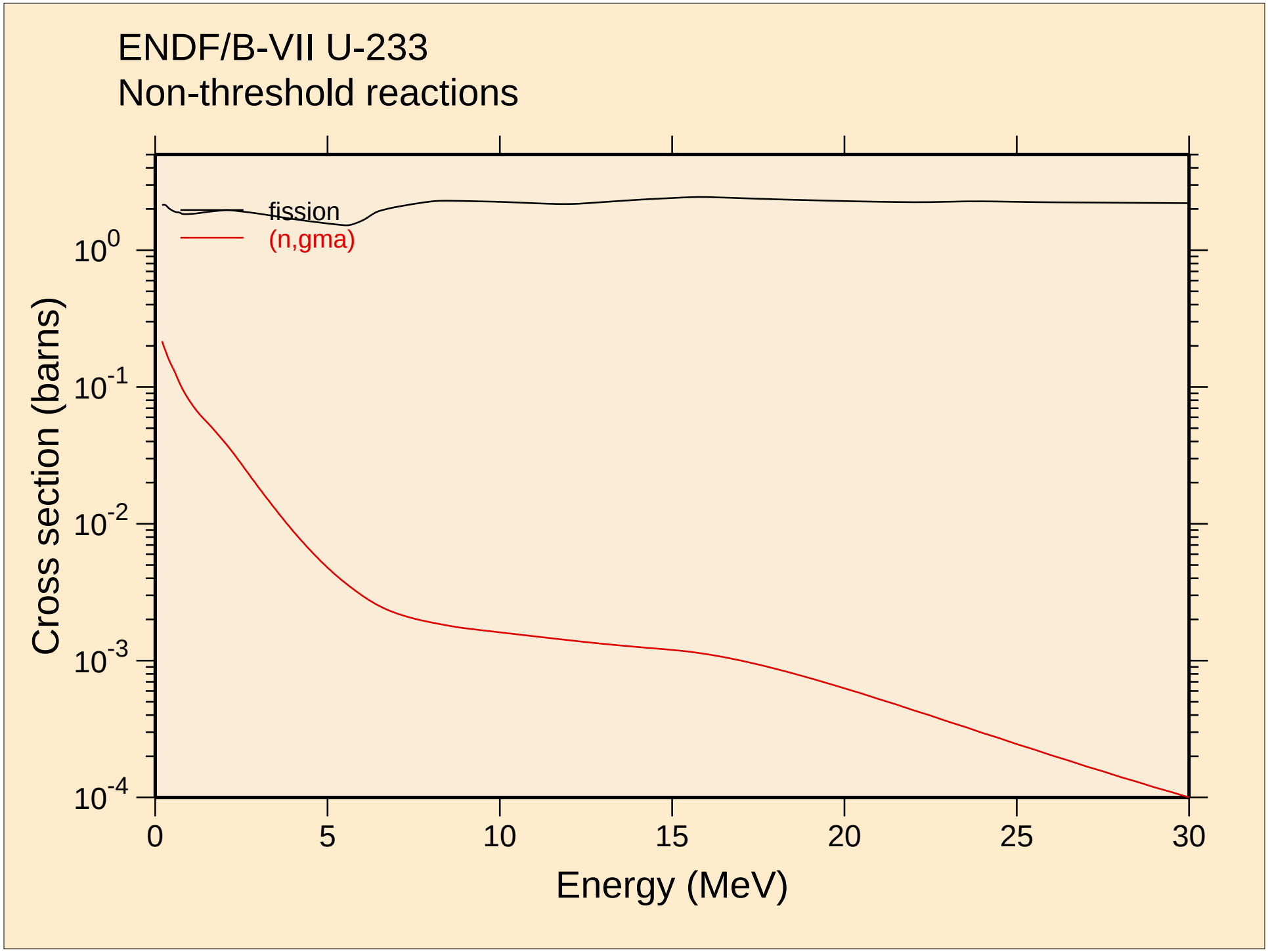
ENDF/B-VII U-233
Non-threshold reactions
fission
(n,gma)
Cross section (barns)
$10^{0}$
$10^{-1}$
$10^{-2}$
$10^{-3}$
$10^{-4}$
0
5
10
15
20
25
30
Energy (MeV)

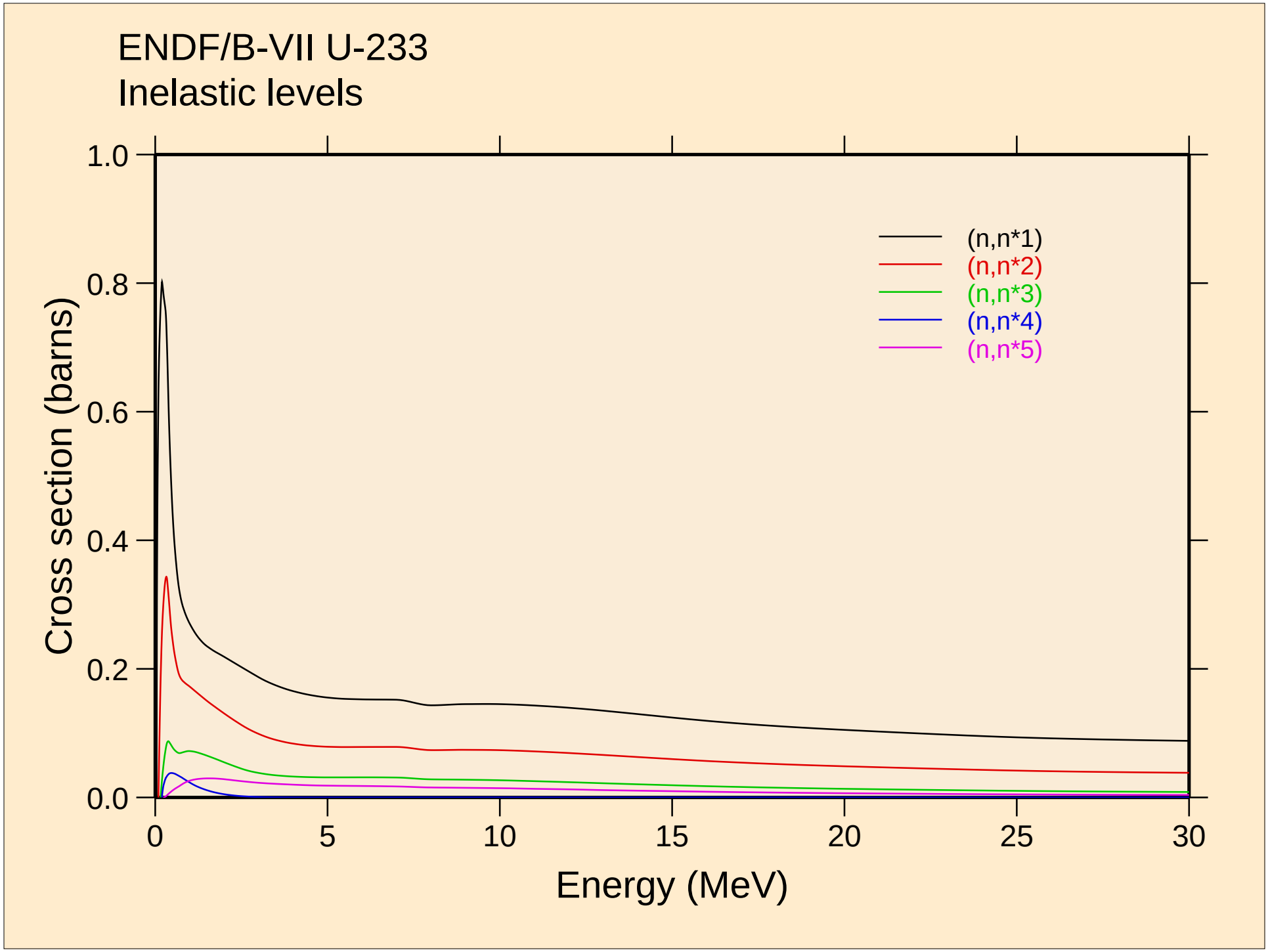
ENDF/B-VII U-233
Inelastic levels
Cross section (barns)
Energy (MeV)
1.0
0.8
0.6
0.4
0.2
0.0
0
5
10
15
20
25
30
(n,n*1)
(n,n*2)
(n,n*3)
(n,n*4)
(n,n*5)

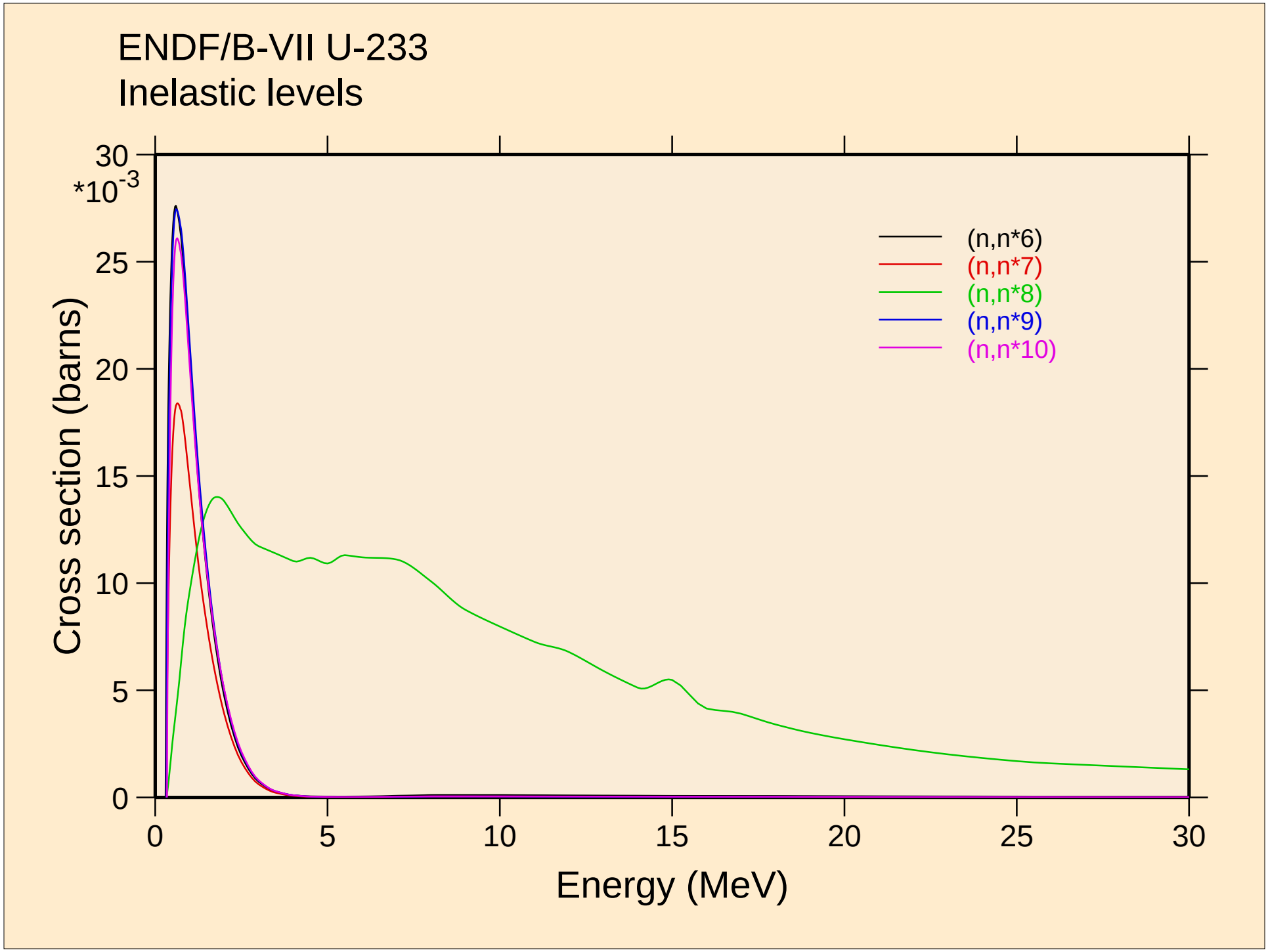
ENDF/B-VII U-233
Inelastic levels
Cross section (barns)
*10^-3
30
25
20
15
10
5
0
0
5
10
15
20
25
30
Energy (MeV)
(n,n*6)
(n,n*7)
(n,n*8)
(n,n*9)
(n,n*10)

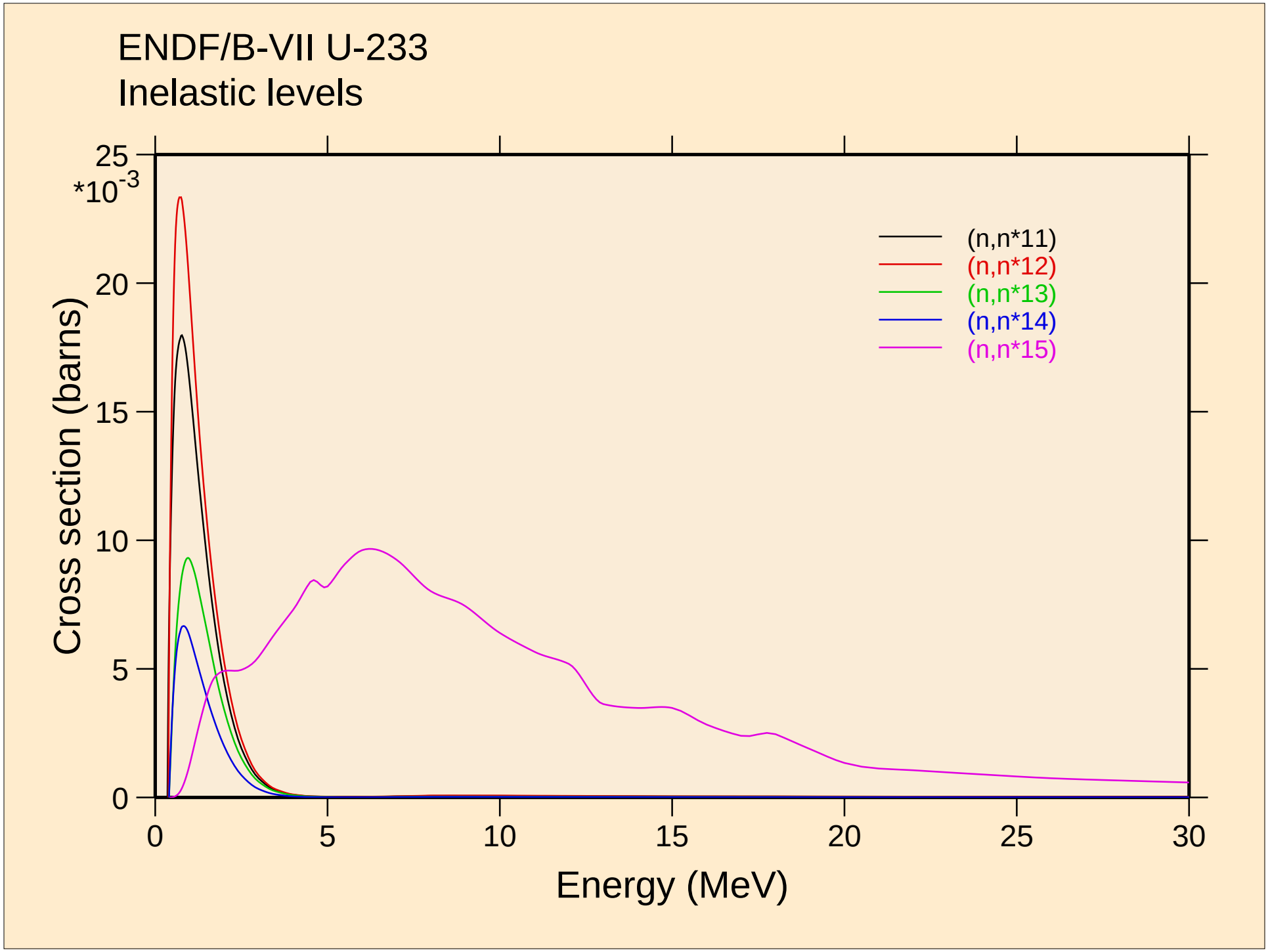
ENDF/B-VII U-233
Inelastic levels
Cross section (barns)
*10^-3
25
20
15
10
5
0
0
5
10
15
20
25
30
Energy (MeV)
(n,n*11)
(n,n*12)
(n,n*13)
(n,n*14)
(n,n*15)

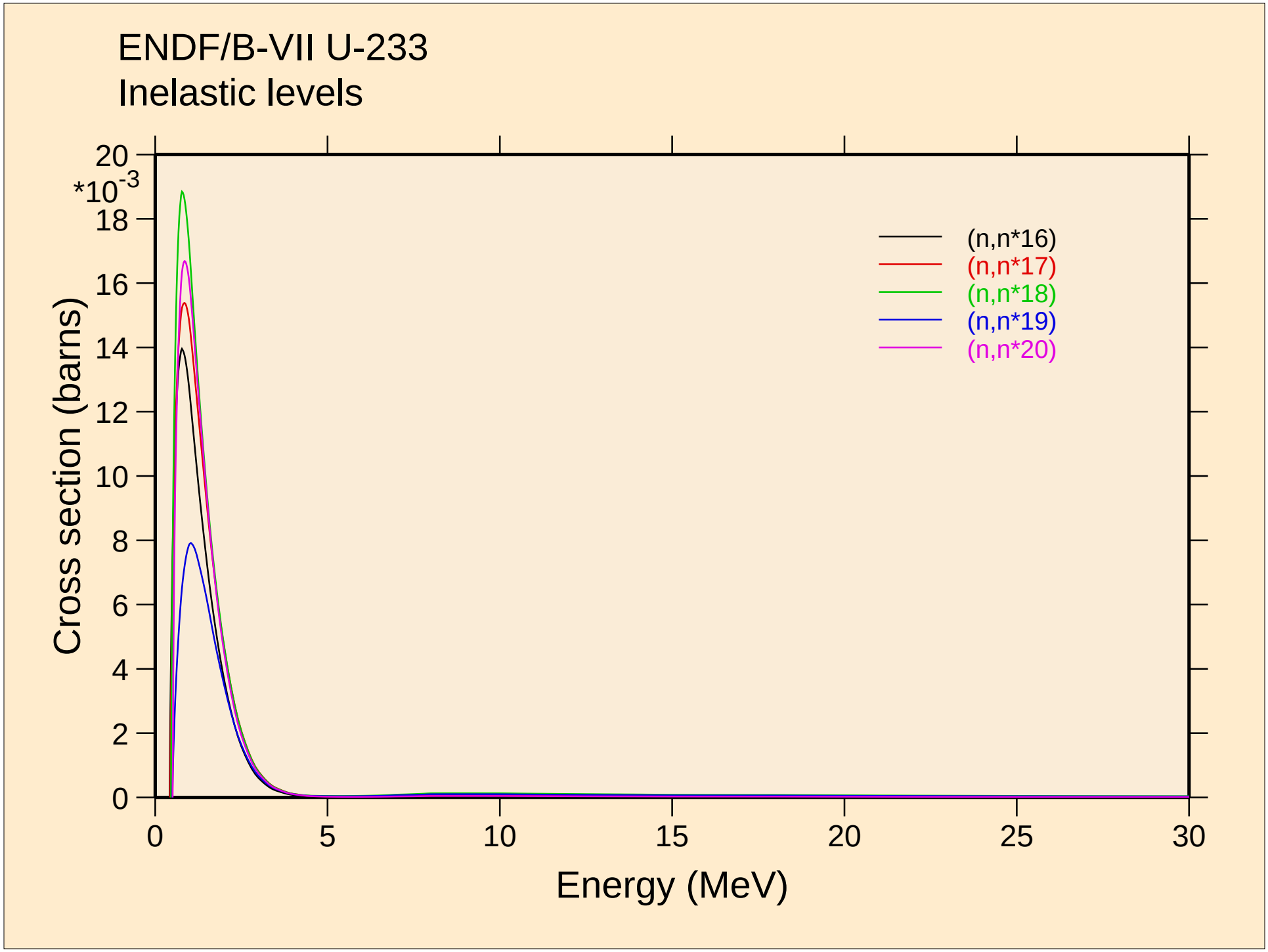
ENDF/B-VII U-233
Inelastic levels
Cross section (barns)
*10^-3
20
18
16
14
12
10
8
6
4
2
0
0
5
10
15
20
25
30
Energy (MeV)
(n,n*16)
(n,n*17)
(n,n*18)
(n,n*19)
(n,n*20)

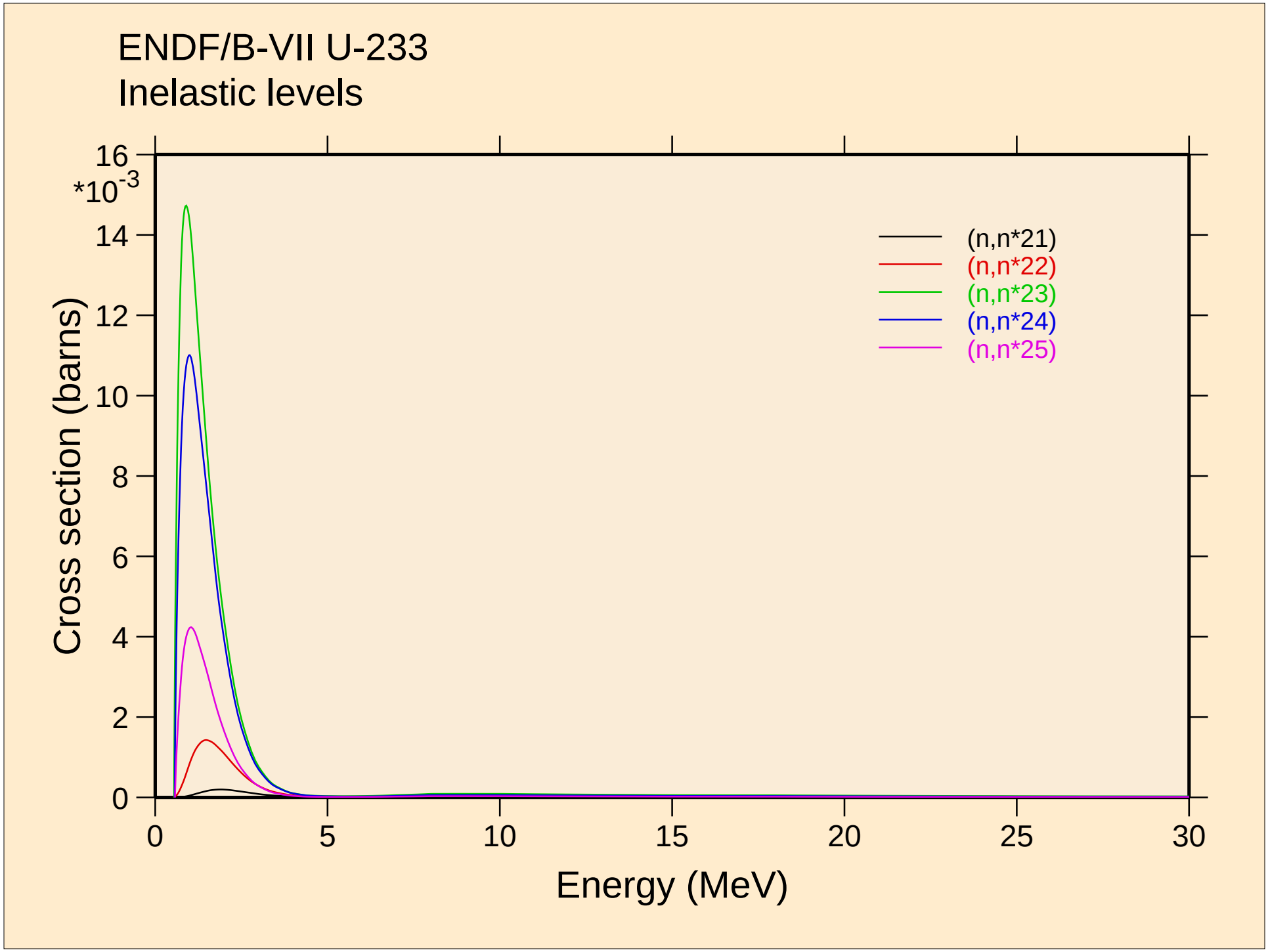
ENDF/B-VII U-233
Inelastic levels
Cross section (barns)
*10^-3
16
14
12
10
8
6
4
2
0
0
5
10
15
20
25
30
Energy (MeV)
(n,n*21)
(n,n*22)
(n,n*23)
(n,n*24)
(n,n*25)

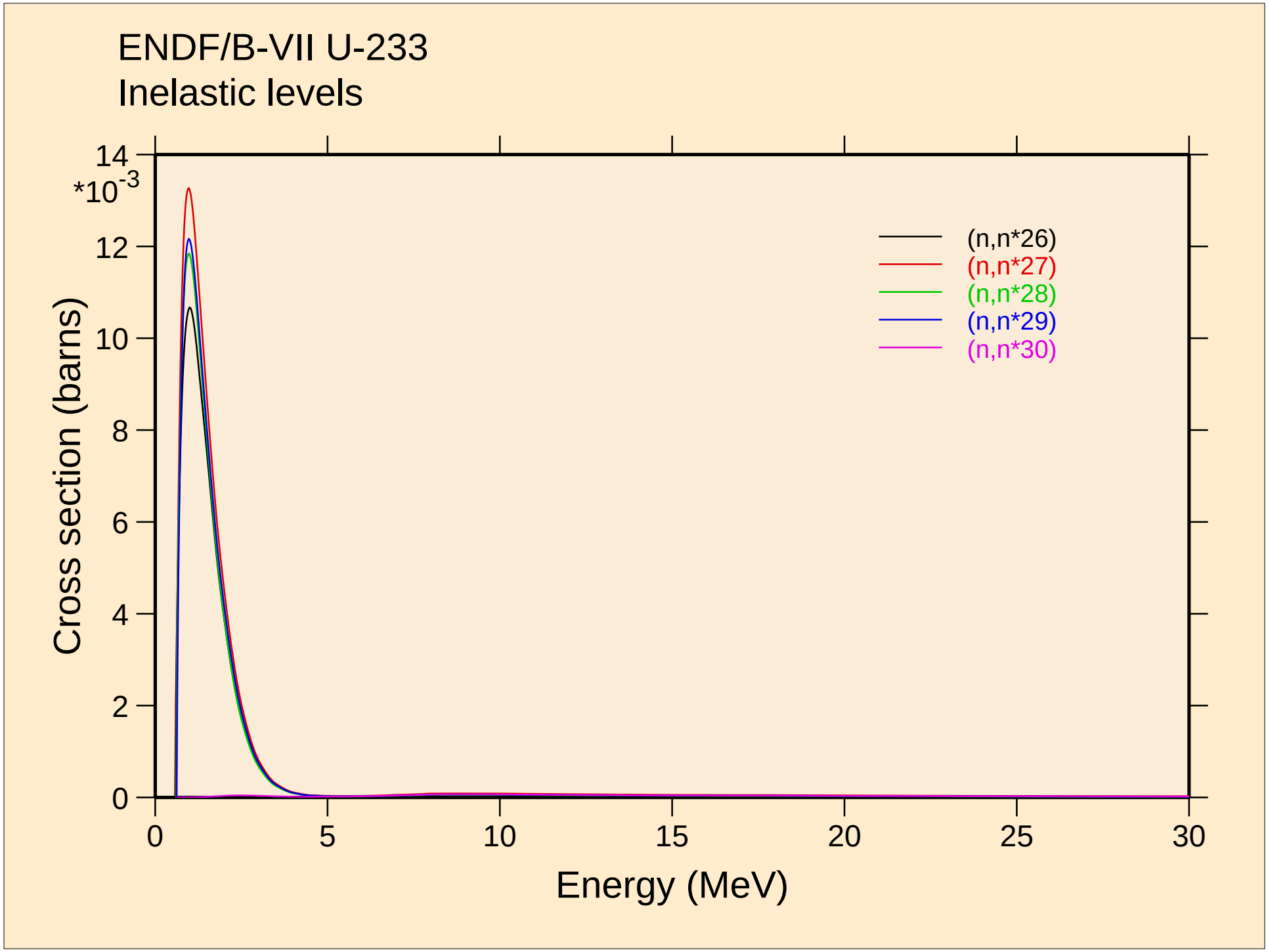
ENDF/B-VII U-233
Inelastic levels
Cross section (barns)
*10^-3
14
12
10
8
6
4
2
0
0
5
10
15
20
25
30
Energy (MeV)
(n,n*26)
(n,n*27)
(n,n*28)
(n,n*29)
(n,n*30)

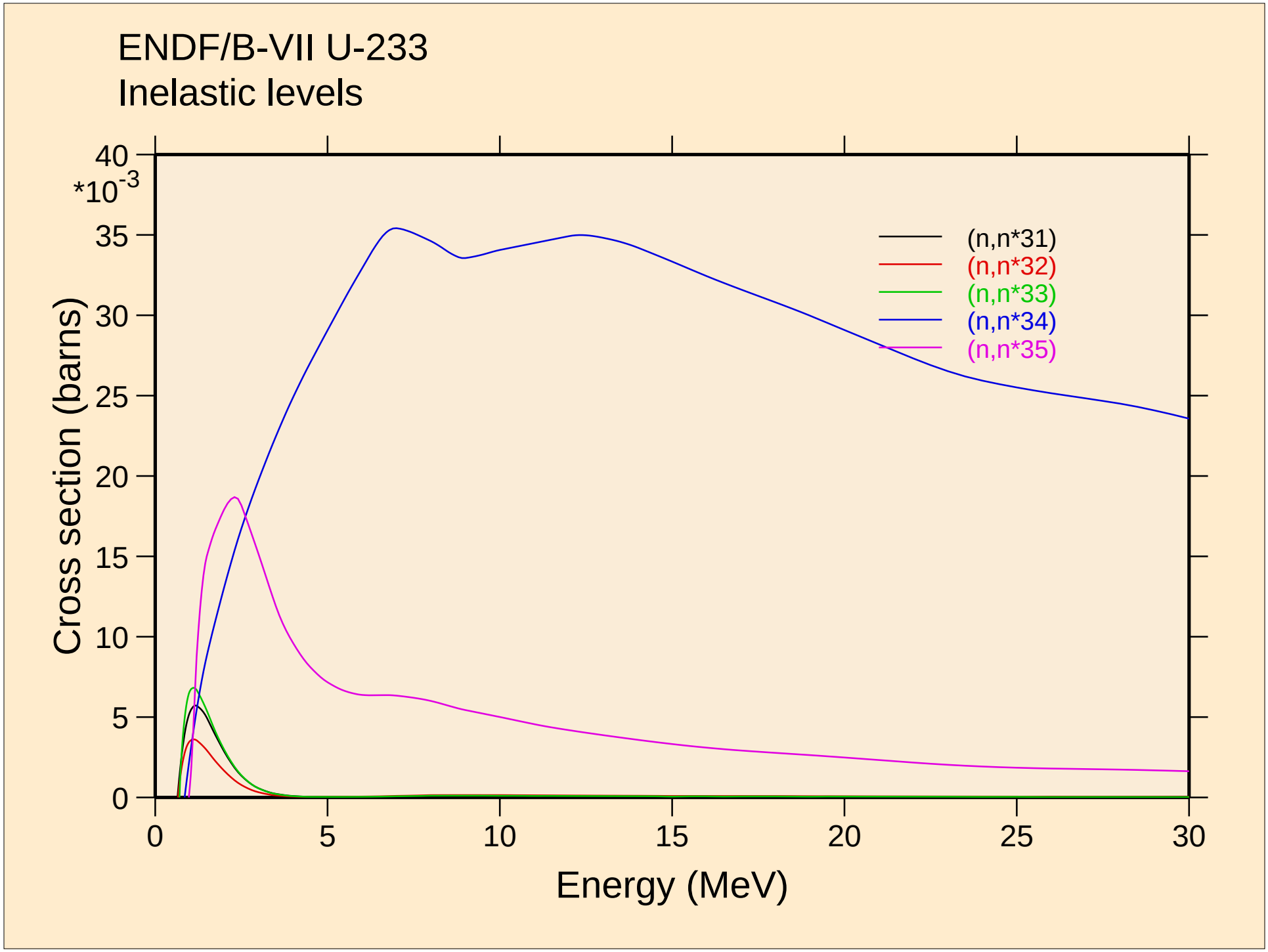
ENDF/B-VII U-233
Inelastic levels
Cross section (barns)
*10^-3
40
35
30
25
20
15
10
5
0
0
5
10
15
20
25
30
Energy (MeV)
(n,n*31)
(n,n*32)
(n,n*33)
(n,n*34)
(n,n*35)

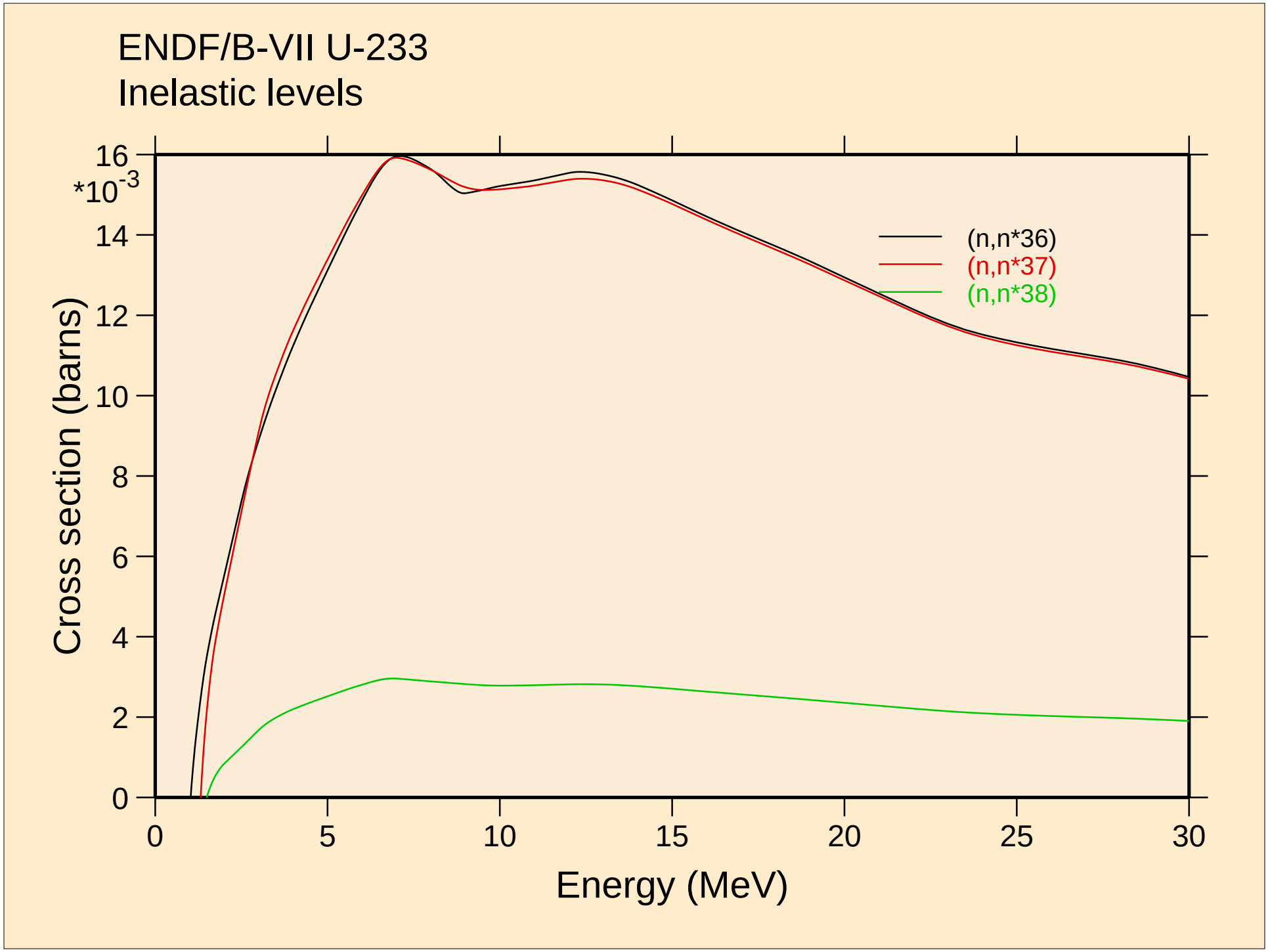
ENDF/B-VII U-233
Inelastic levels
Cross section (barns)
*10^-3
16
14
12
10
8
6
4
2
0
0
5
10
15
20
25
30
Energy (MeV)
(n,n*36)
(n,n*37)
(n,n*38)

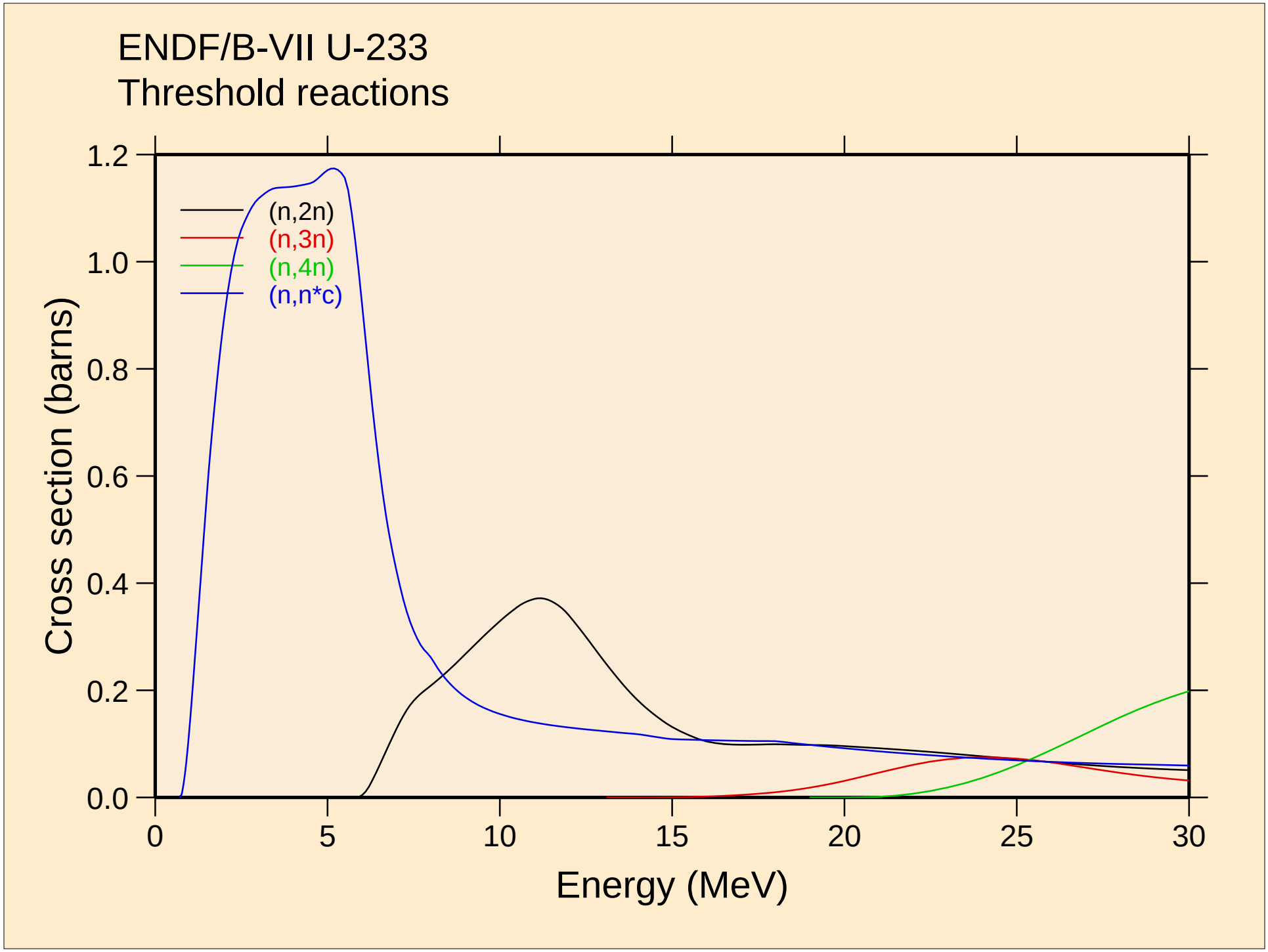
ENDF/B-VII U-233
Threshold reactions
(n,2n)
(n,3n)
(n,4n)
(n,n*c)
Cross section (barns)
Energy (MeV)
0.0
0.2
0.4
0.6
0.8
1.0
1.2
0
5
10
15
20
25
30

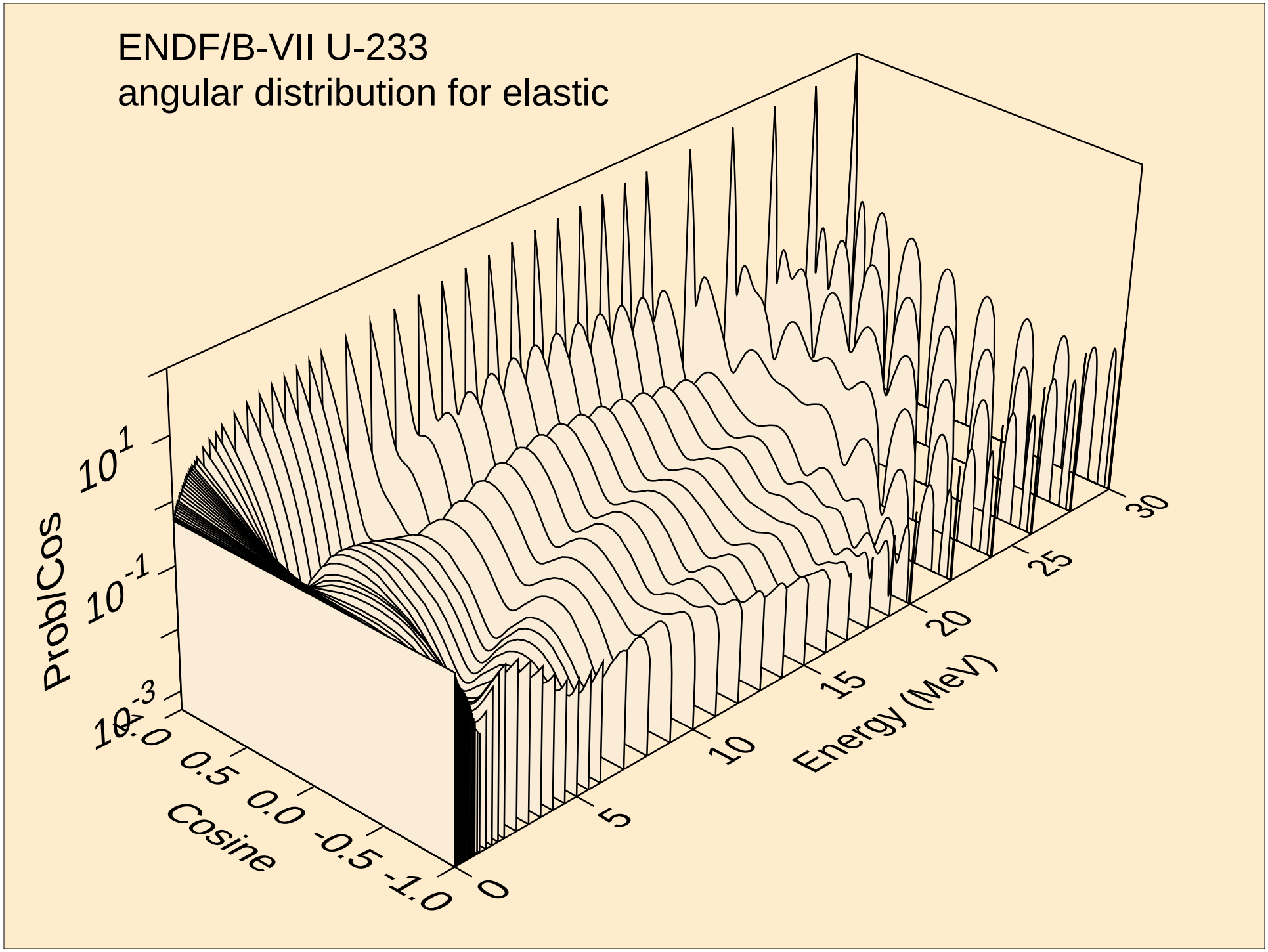
ENDF/B-VII U-233
angular distribution for elastic
ProbCos
$10^{1}$
$10^{-1}$
$10^{-3}$
1.0
0.5
0.0
-0.5
-1.0
Cosine
0
5
10
15
20
25
30
Energy (MeV)

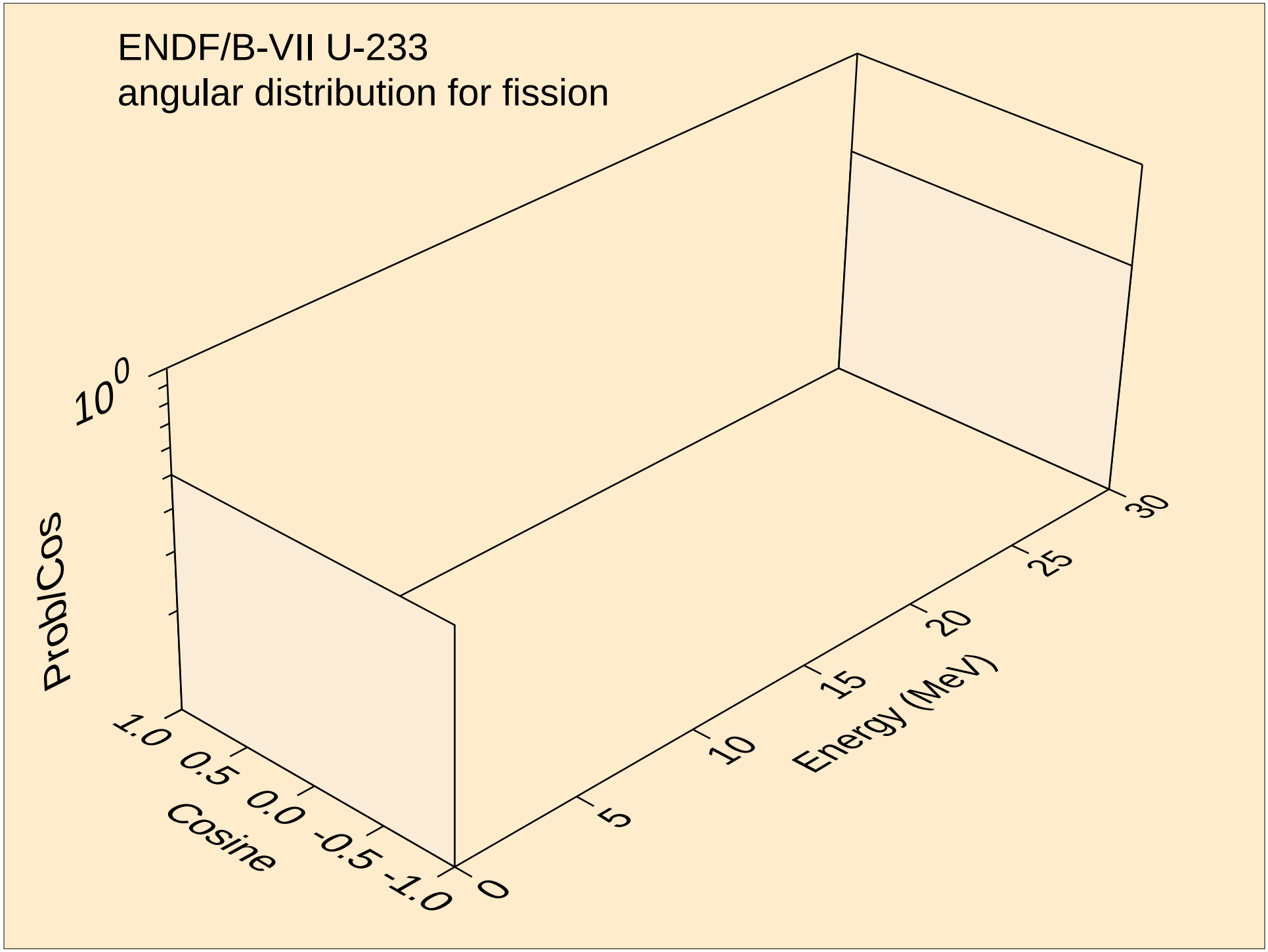
ENDF/B-VII U-233
angular distribution for fission
$10^0$
ProbCos
1.0
0.5
0.0
-0.5
-1.0
Cosine
0
5
10
15
20
25
30
Energy (MeV)

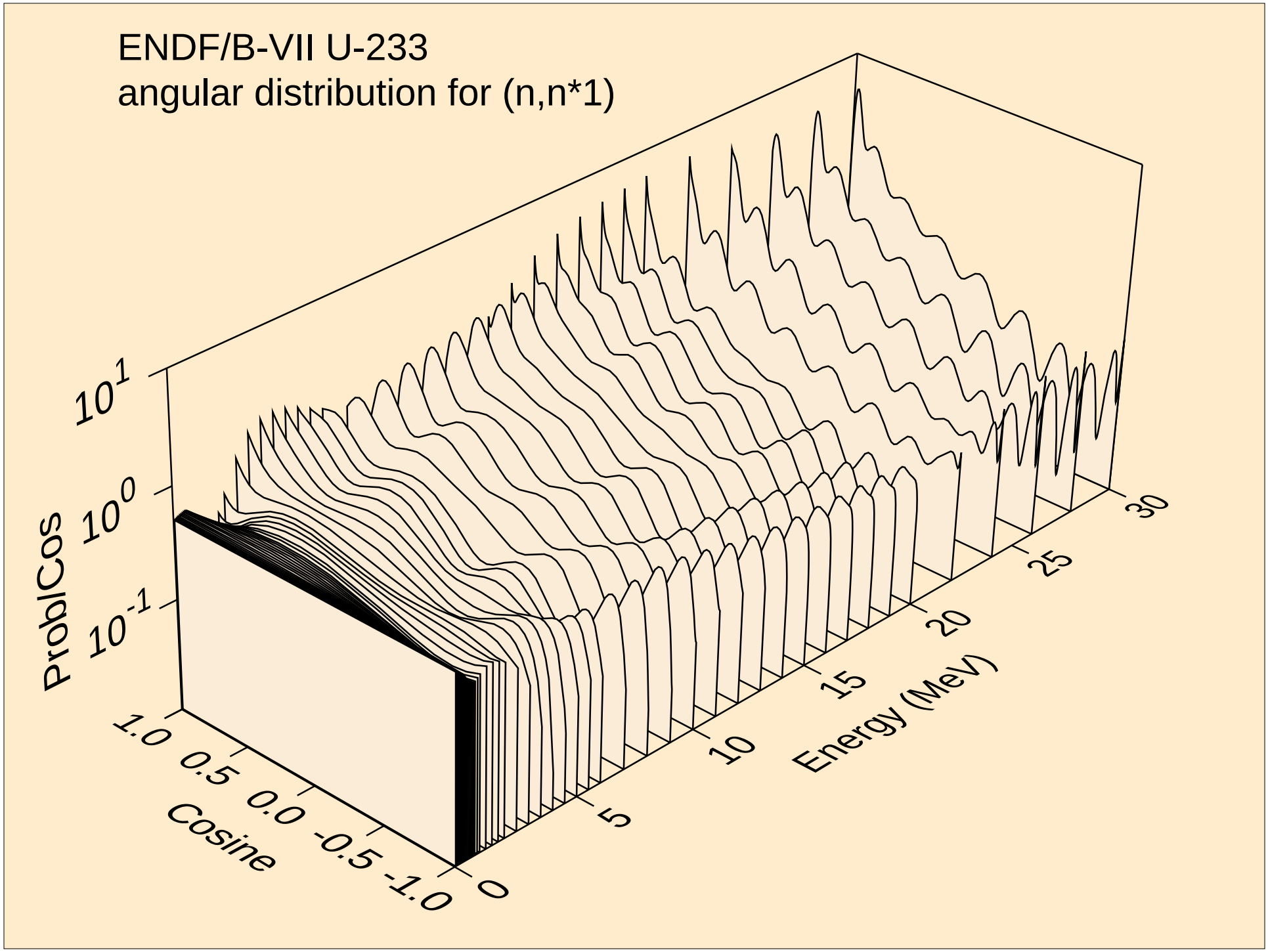
ENDF/B-VII U-233
angular distribution for (n,n*1)
ProbCos
$10^{1}$
$10^{0}$
$10^{-1}$
Cosine
1.0
0.5
0.0
-0.5
-1.0
Energy (MeV)
0
5
10
15
20
25
30

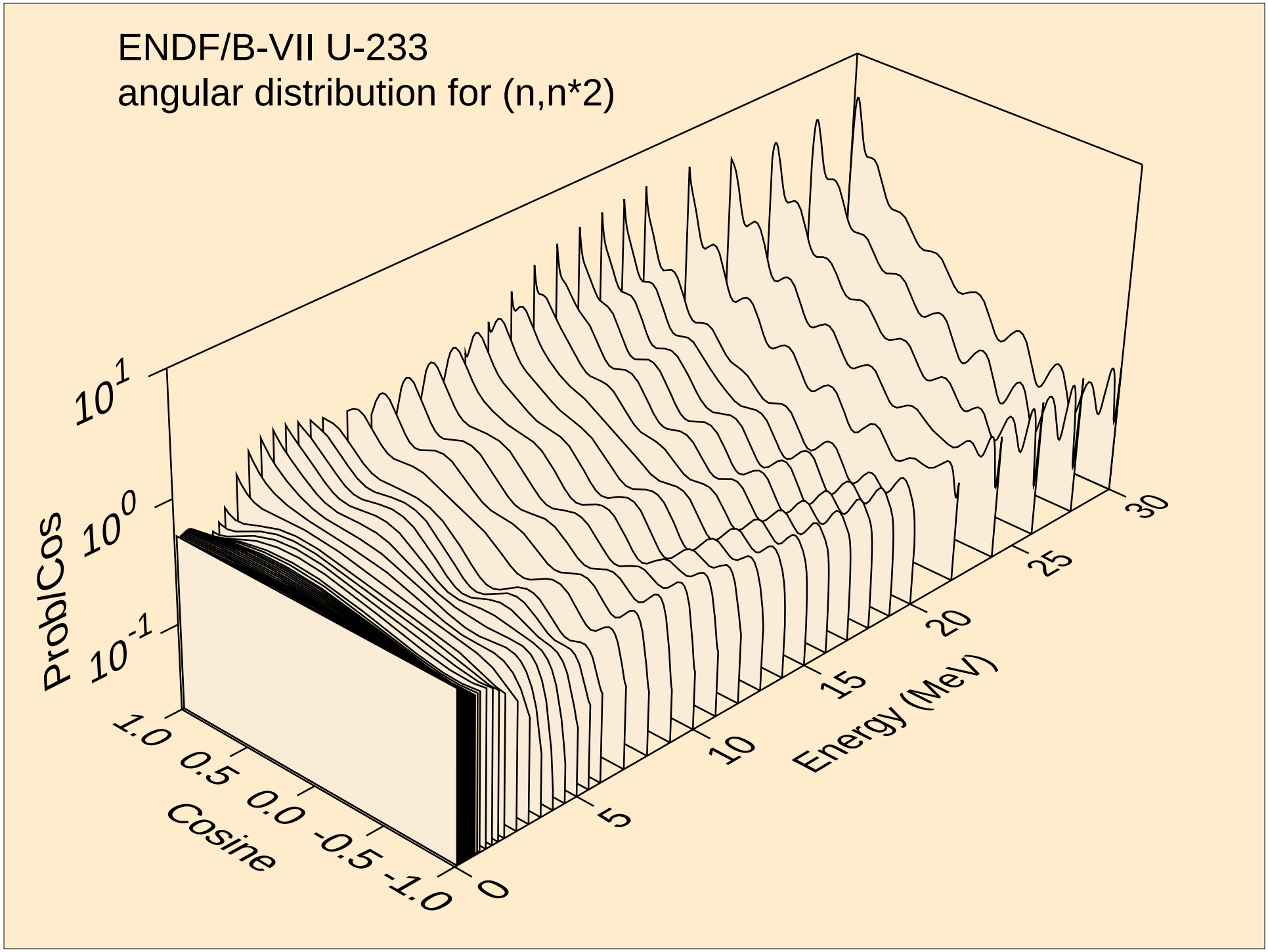
ENDF/B-VII U-233
angular distribution for (n,n*2)
ProbCos
$10^{1}$
$10^{0}$
$10^{-1}$
Cosine
1.0
0.5
0.0
-0.5
-1.0
Energy (MeV)
0
5
10
15
20
25
30

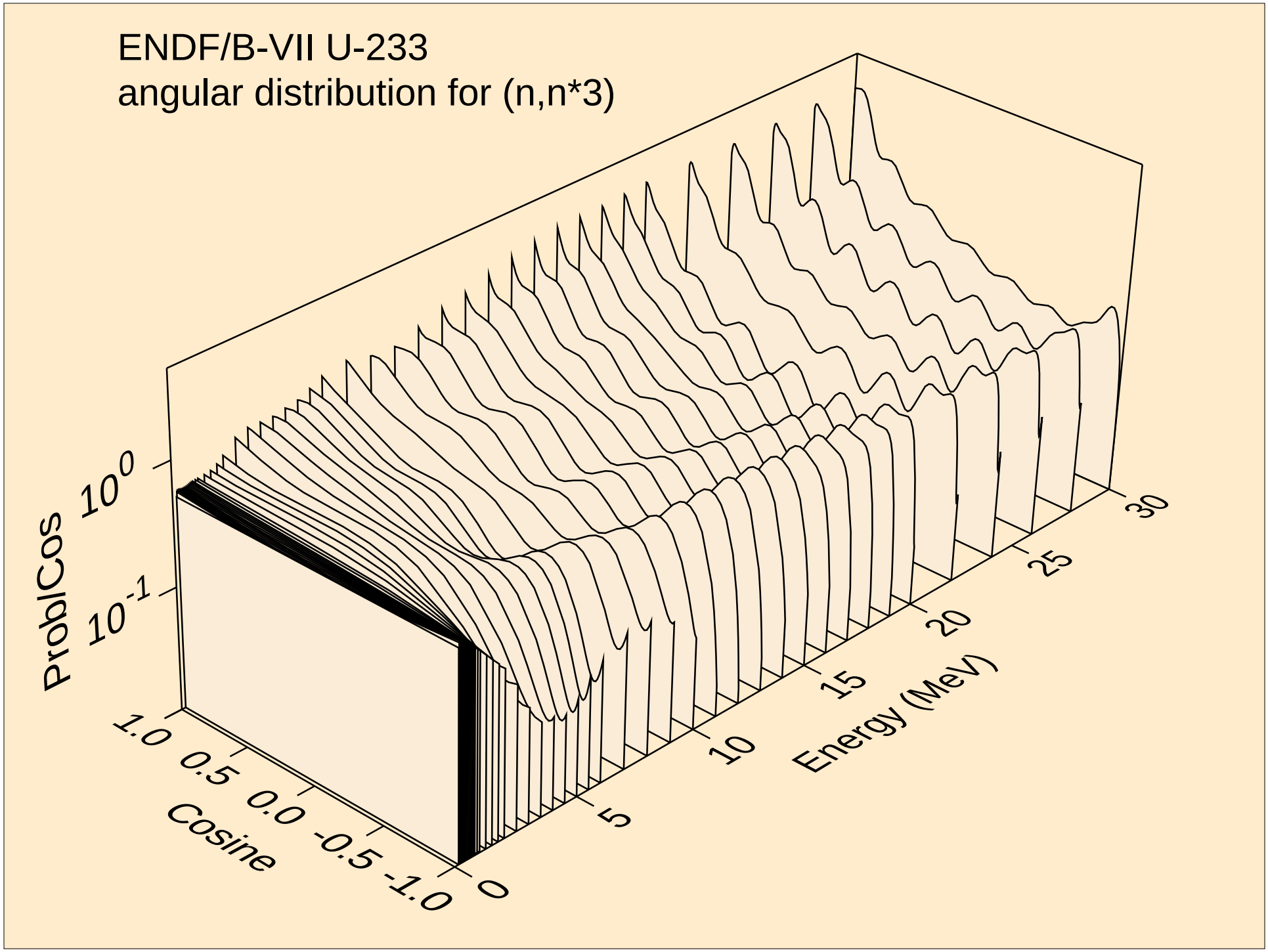
ENDF/B-VII U-233
angular distribution for (n,n*3)
ProbCos
$10^0$
$10^{-1}$
Cosine
1.0
0.5
0.0
-0.5
-1.0
Energy (MeV)
0
5
10
15
20
25
30

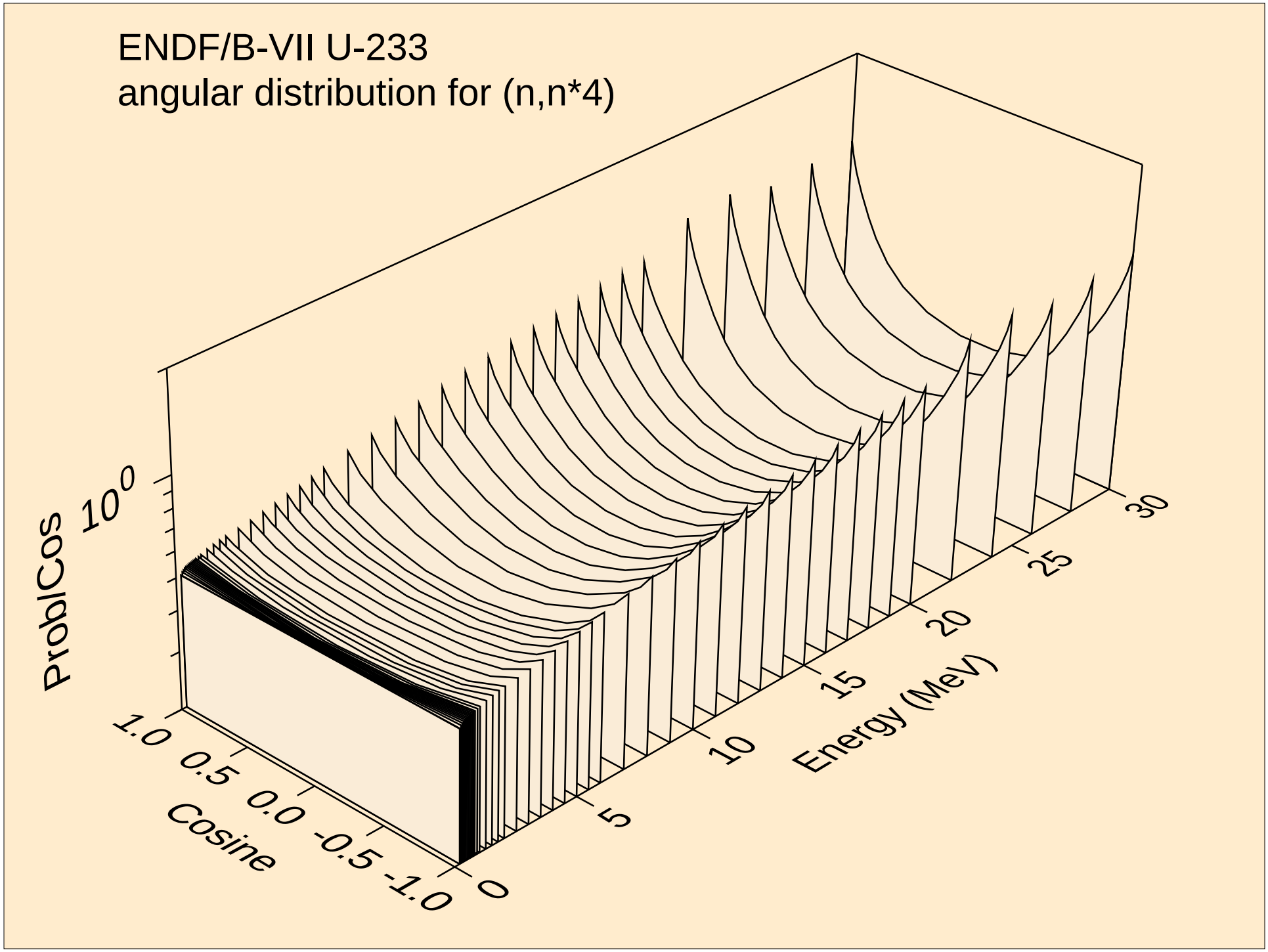
ENDF/B-VII U-233
angular distribution for (n,n*4)
ProblCos
$10^0$
1.0
0.5
0.0
-0.5
-1.0
Cosine
0
5
10
15
20
25
30
Energy (MeV)

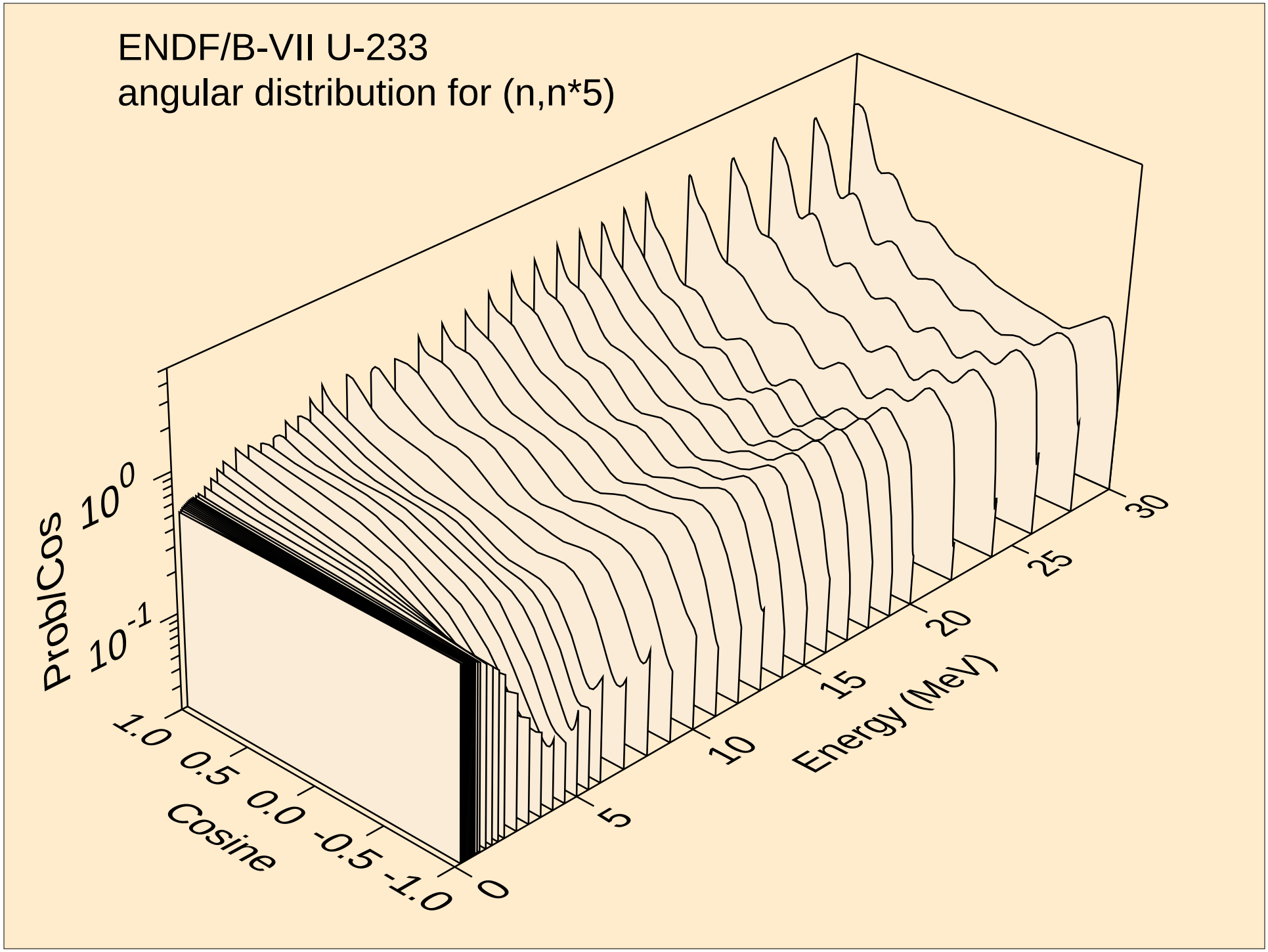
ENDF/B-VII U-233
angular distribution for (n,n*5)
Prob/Cos
$10^0$
$10^{-1}$
1.0
0.5
0.0
-0.5
-1.0
Cosine
0
5
10
15
20
25
30
Energy (MeV)

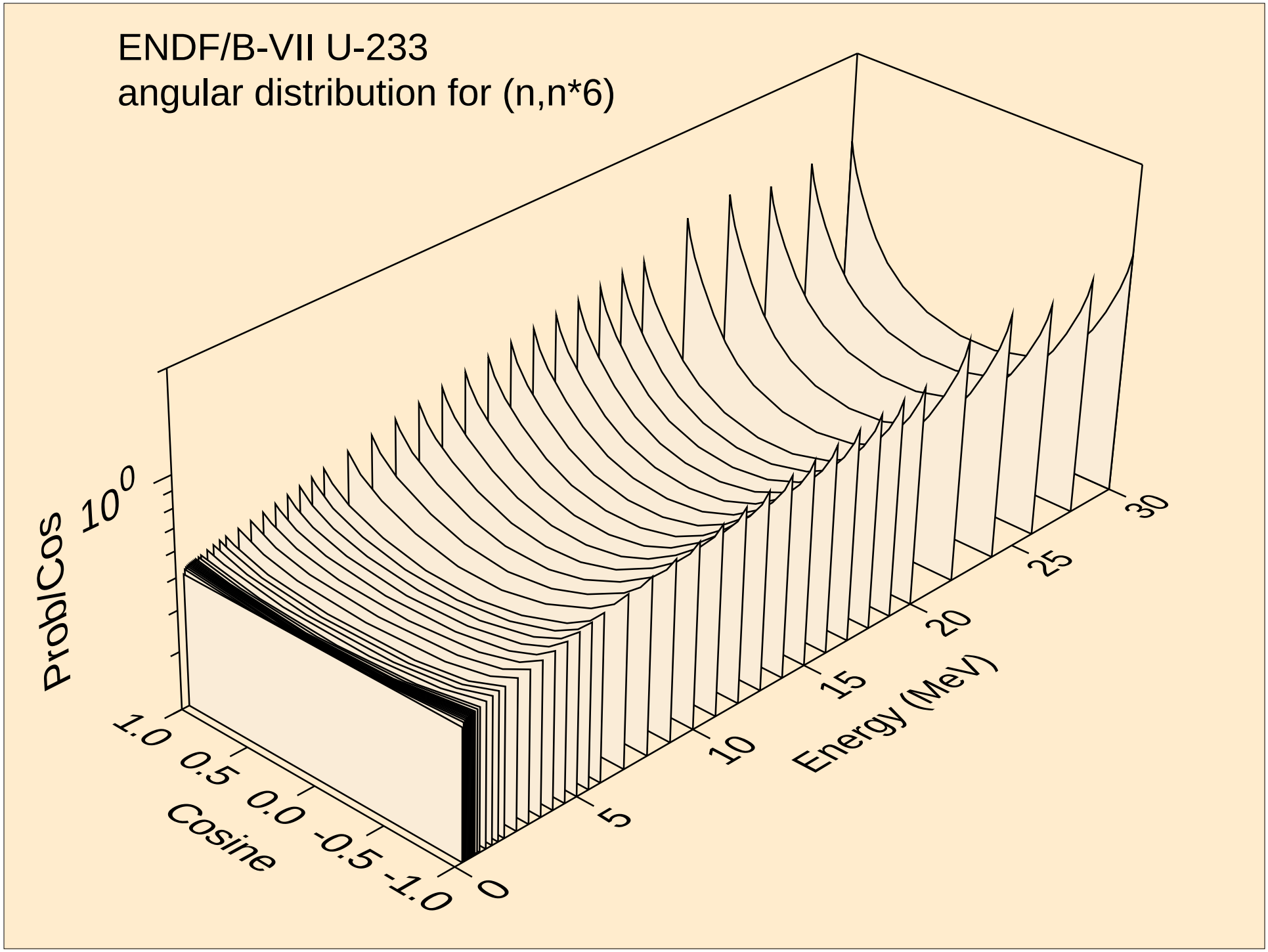
ENDF/B-VII U-233
angular distribution for (n,n*6)
ProblCos
$10^0$
1.0
0.5
0.0
-0.5
-1.0
Cosine
0
5
10
15
20
25
30
Energy (MeV)

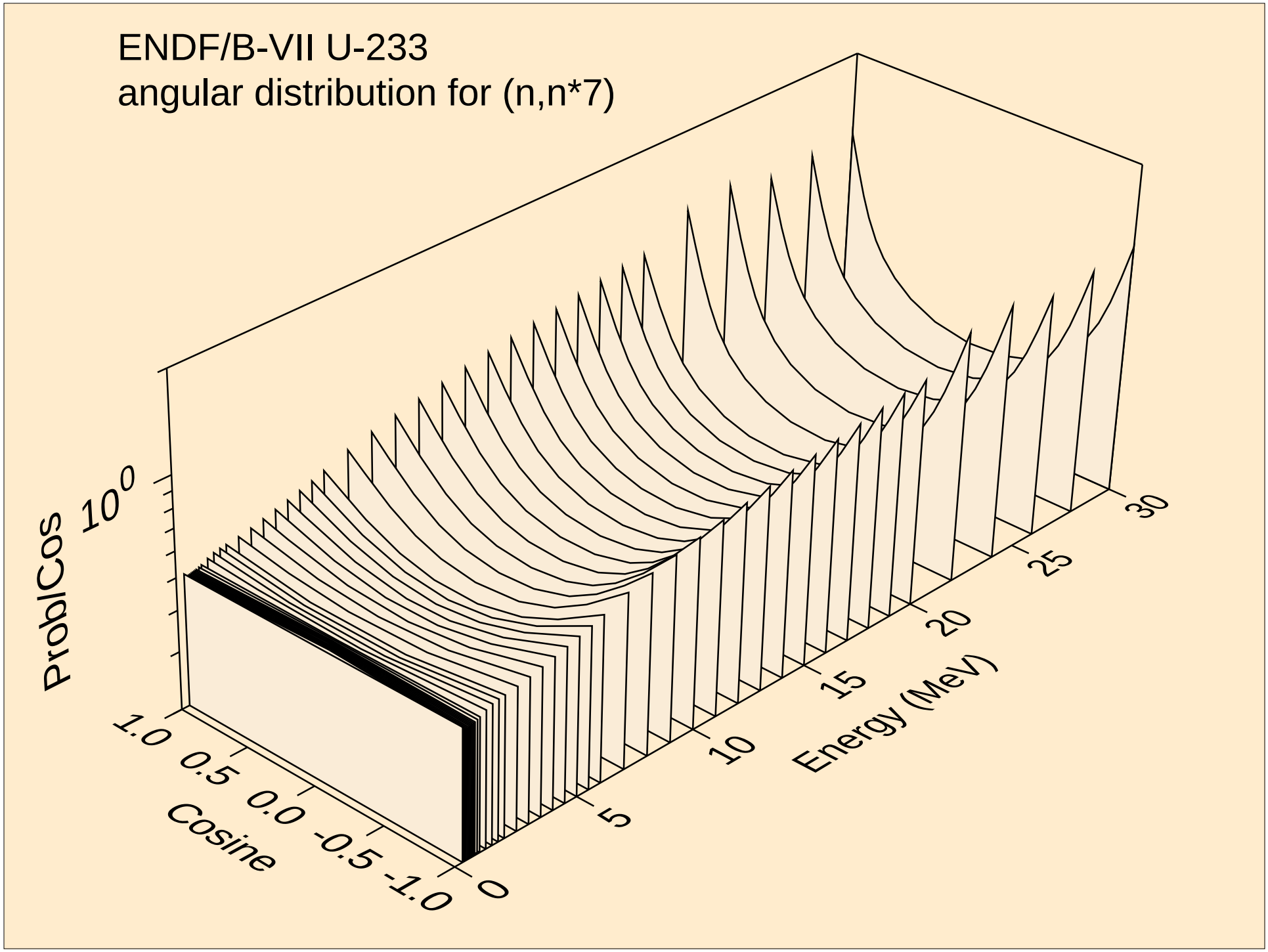
ENDF/B-VII U-233
angular distribution for (n,n*7)
ProblCos
$10^0$
1.0
0.5
0.0
-0.5
-1.0
Cosine
0
5
10
15
20
25
30
Energy (MeV)

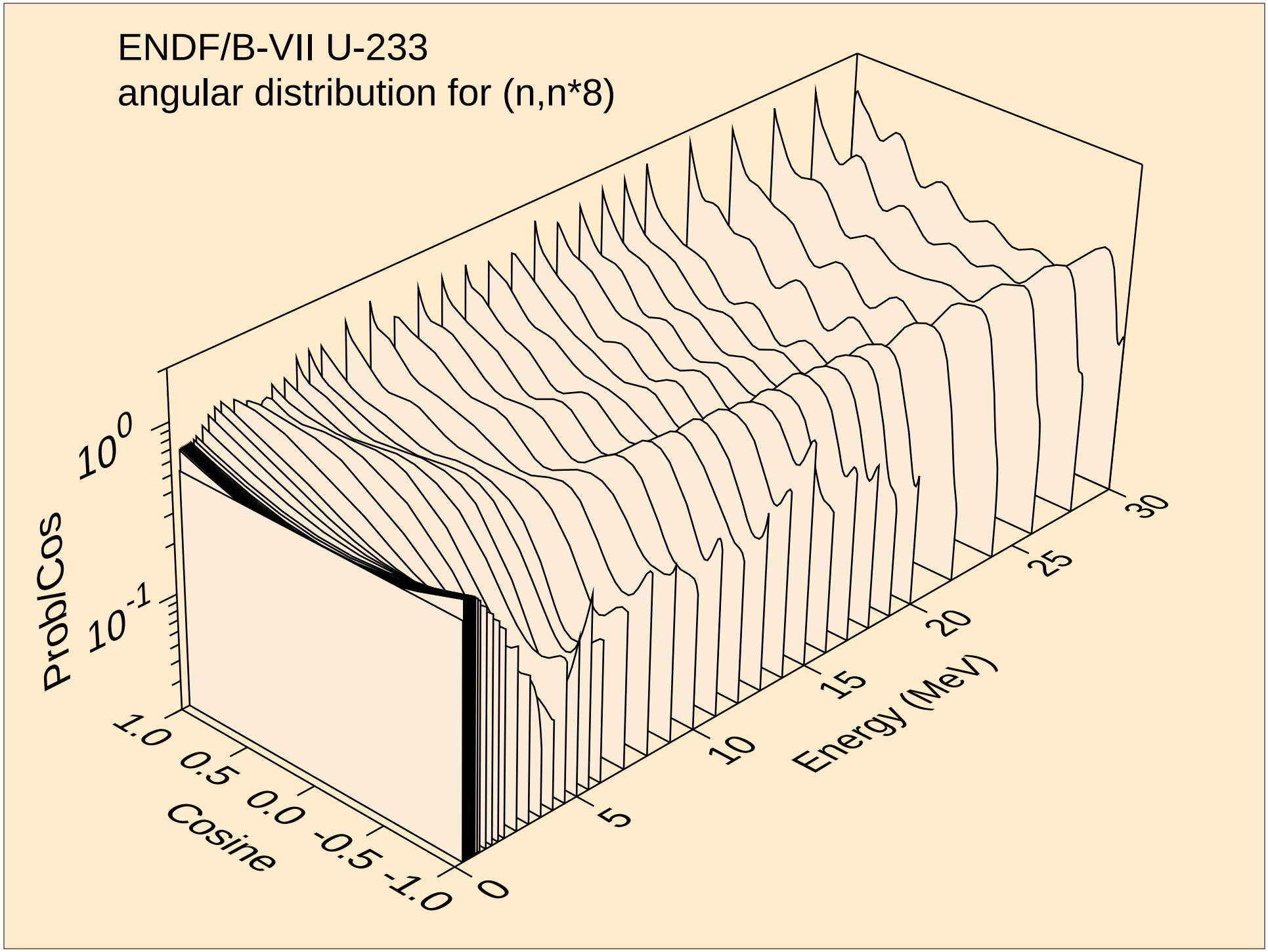
ENDF/B-VII U-233
angular distribution for (n,n*8)
ProbCos
$10^0$
$10^{-1}$
Cosine
1.0
0.5
0.0
-0.5
-1.0
Energy (MeV)
0
5
10
15
20
25
30

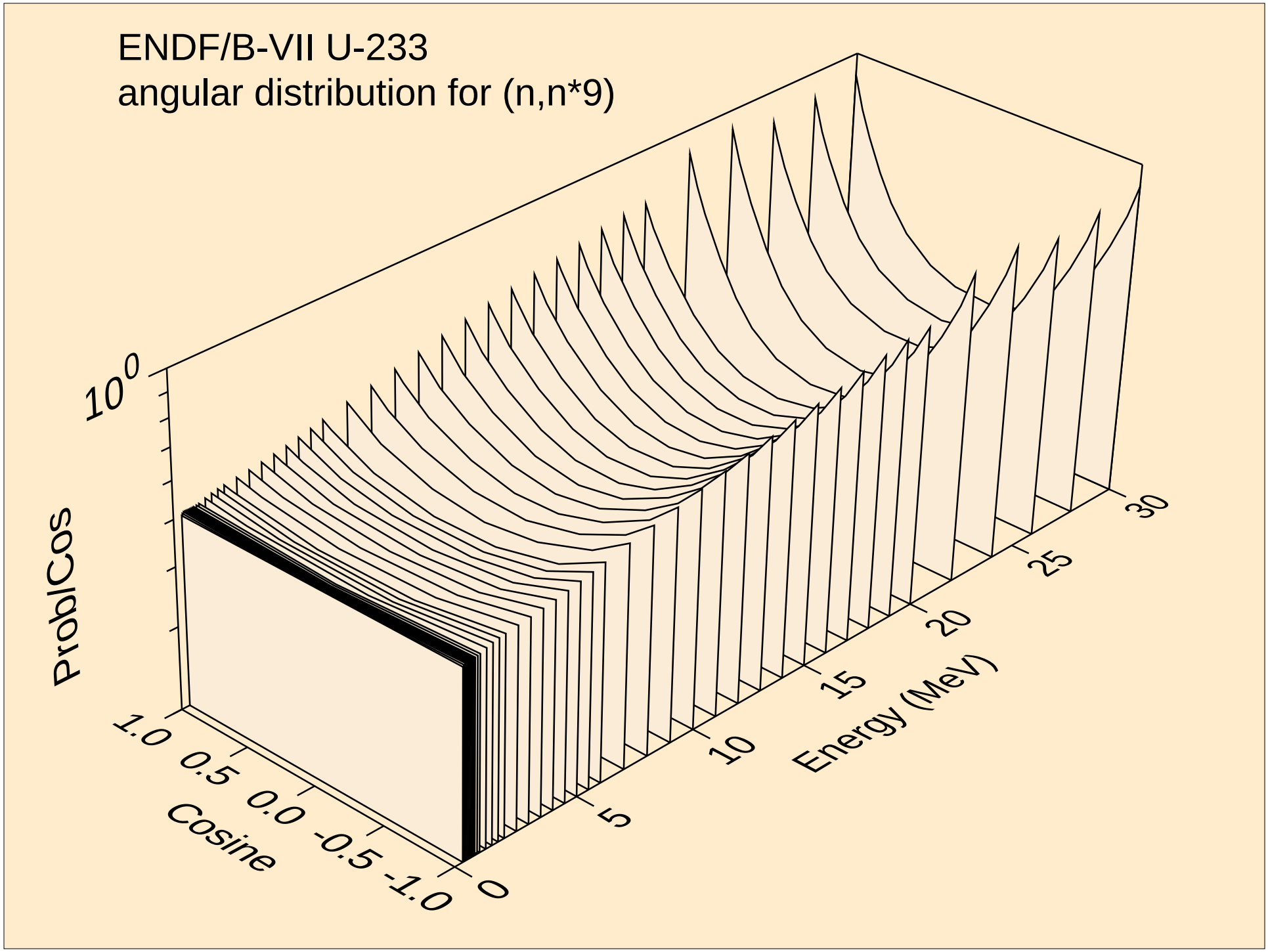
ENDF/B-VII U-233
angular distribution for (n,n*9)
$10^0$
ProbCos
1.0
0.5
0.0
-0.5
-1.0
Cosine
0
5
10
15
20
25
30
Energy (MeV)

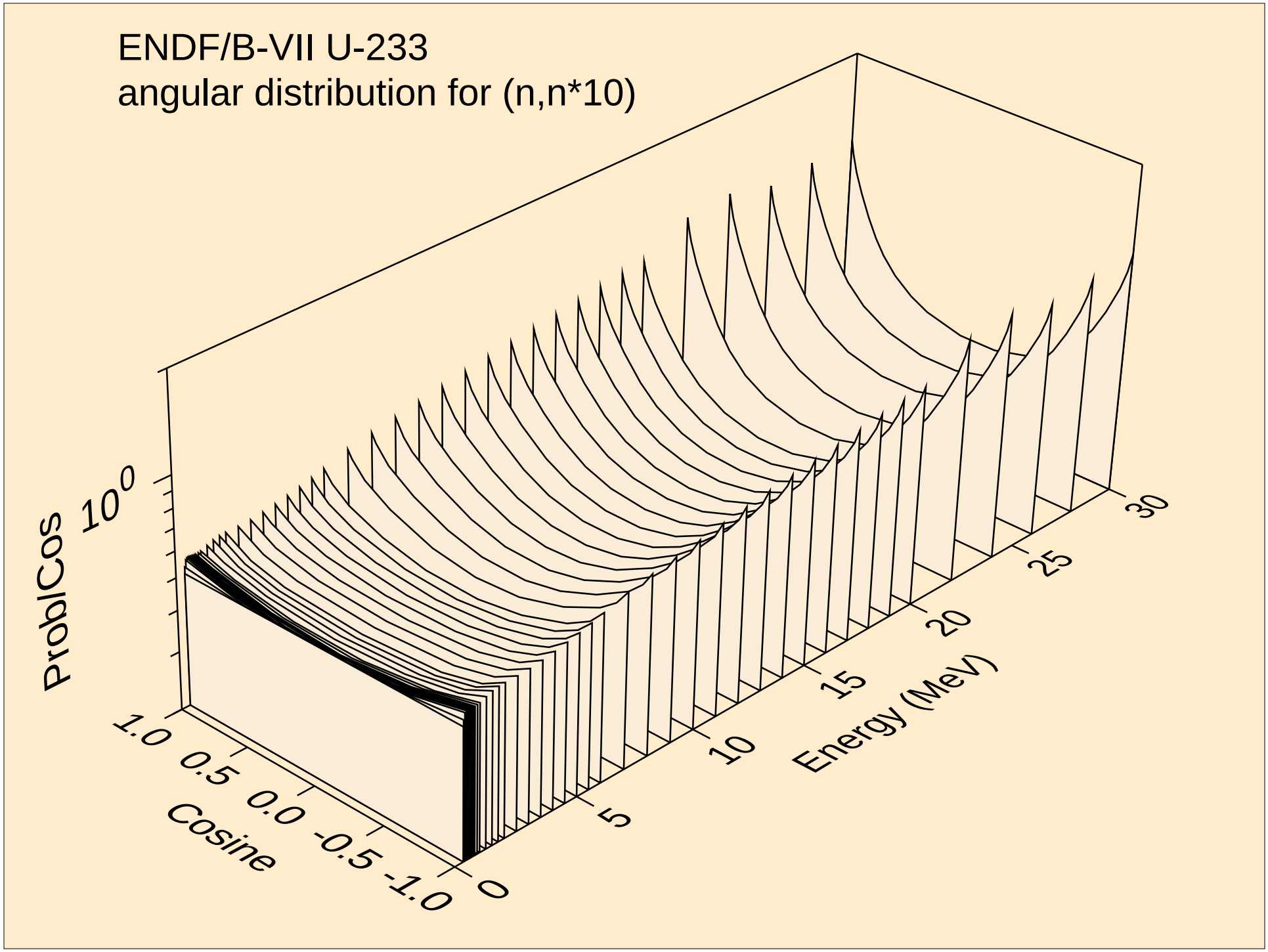
ENDF/B-VII U-233
angular distribution for (n,n*10)
ProblCos
$10^0$
1.0
0.5
0.0
-0.5
-1.0
Cosine
0
5
10
15
20
25
30
Energy (MeV)

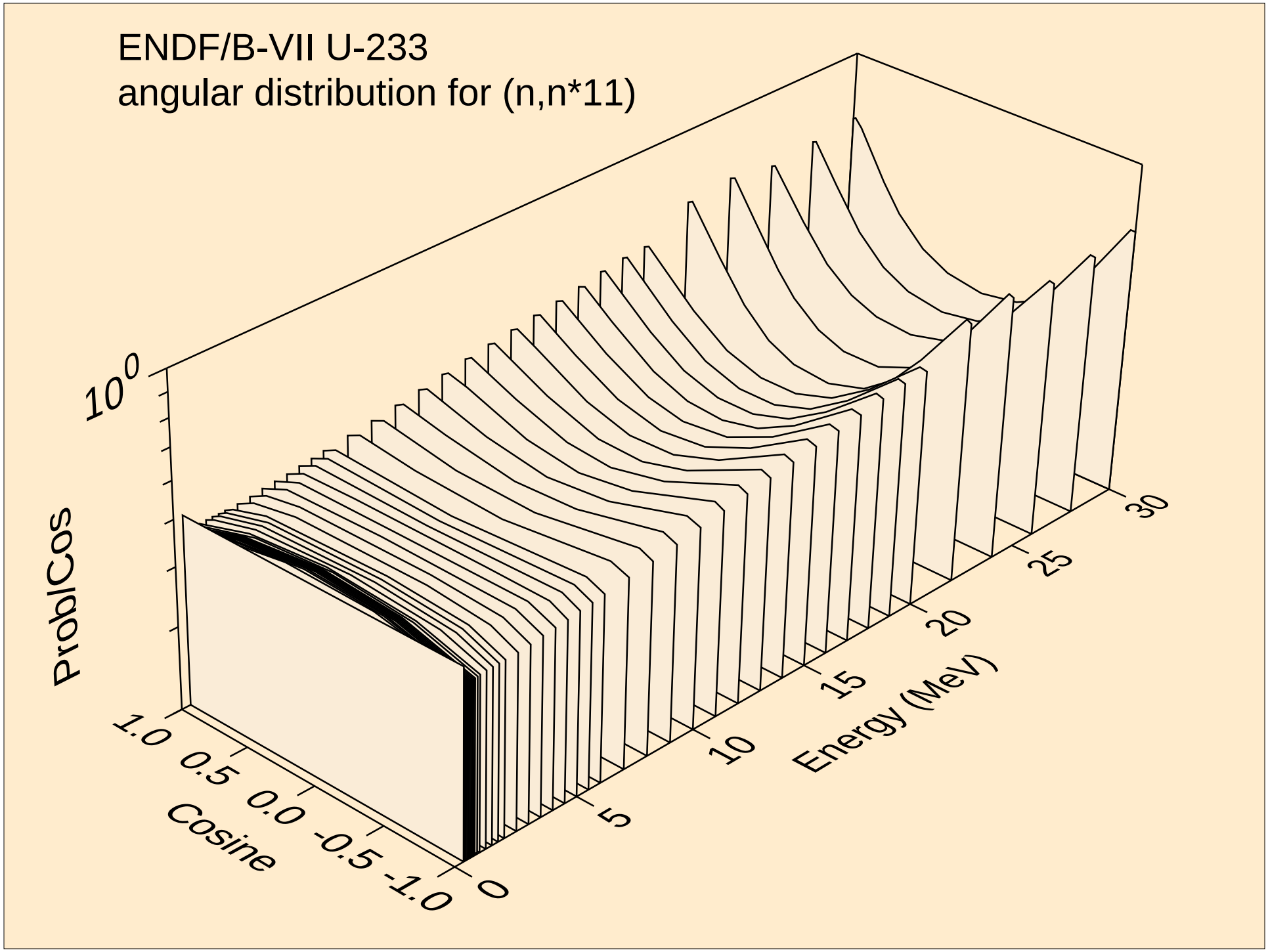
ENDF/B-VII U-233
angular distribution for (n,n*11)
$10^0$
ProbCos
1.0
0.5
0.0
-0.5
-1.0
Cosine
0
5
10
15
20
25
30
Energy (MeV)

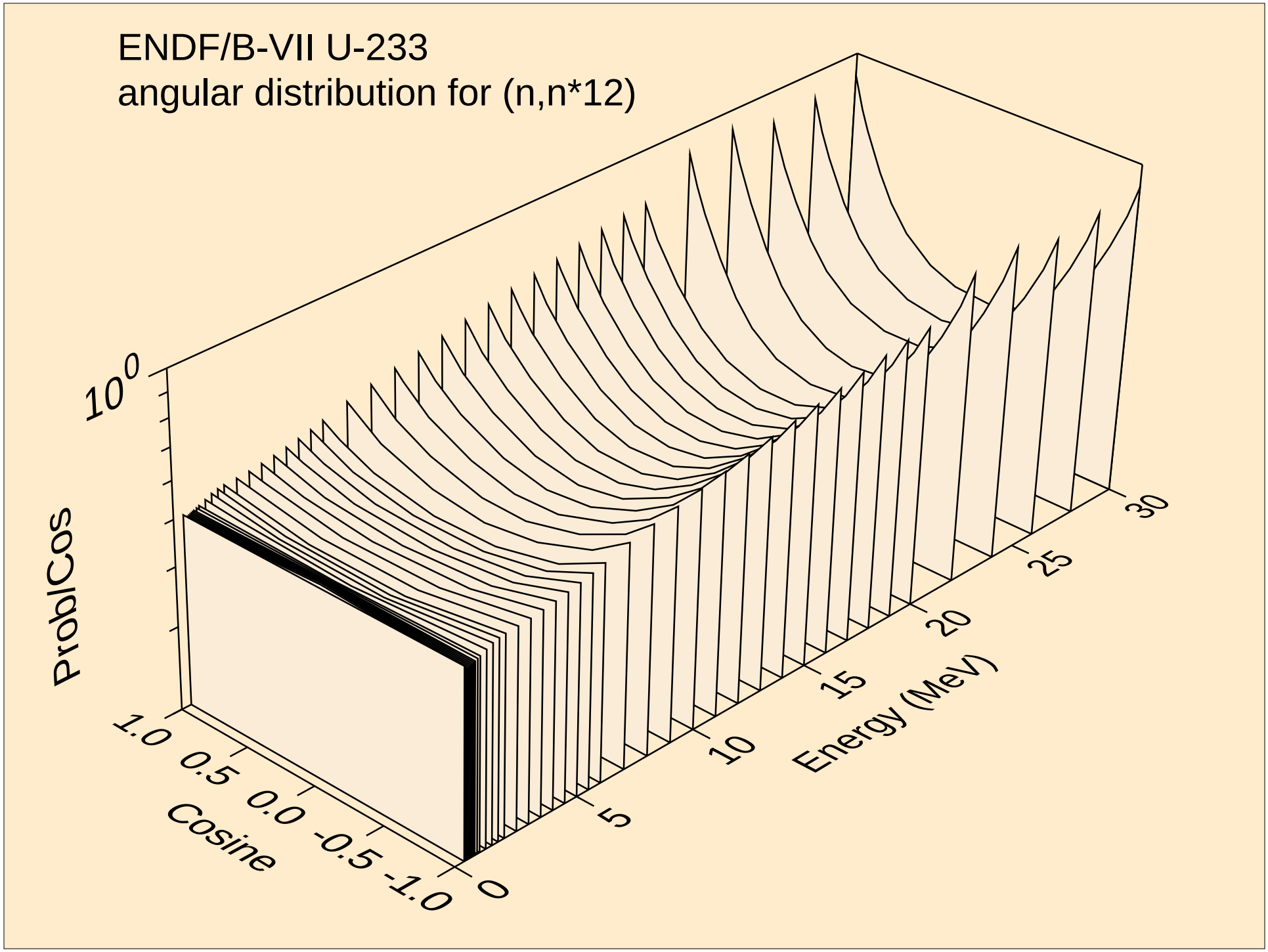
ENDF/B-VII U-233
angular distribution for (n,n*12)
$10^0$
ProbCos
1.0
0.5
0.0
-0.5
-1.0
Cosine
0
5
10
15
20
25
30
Energy (MeV)

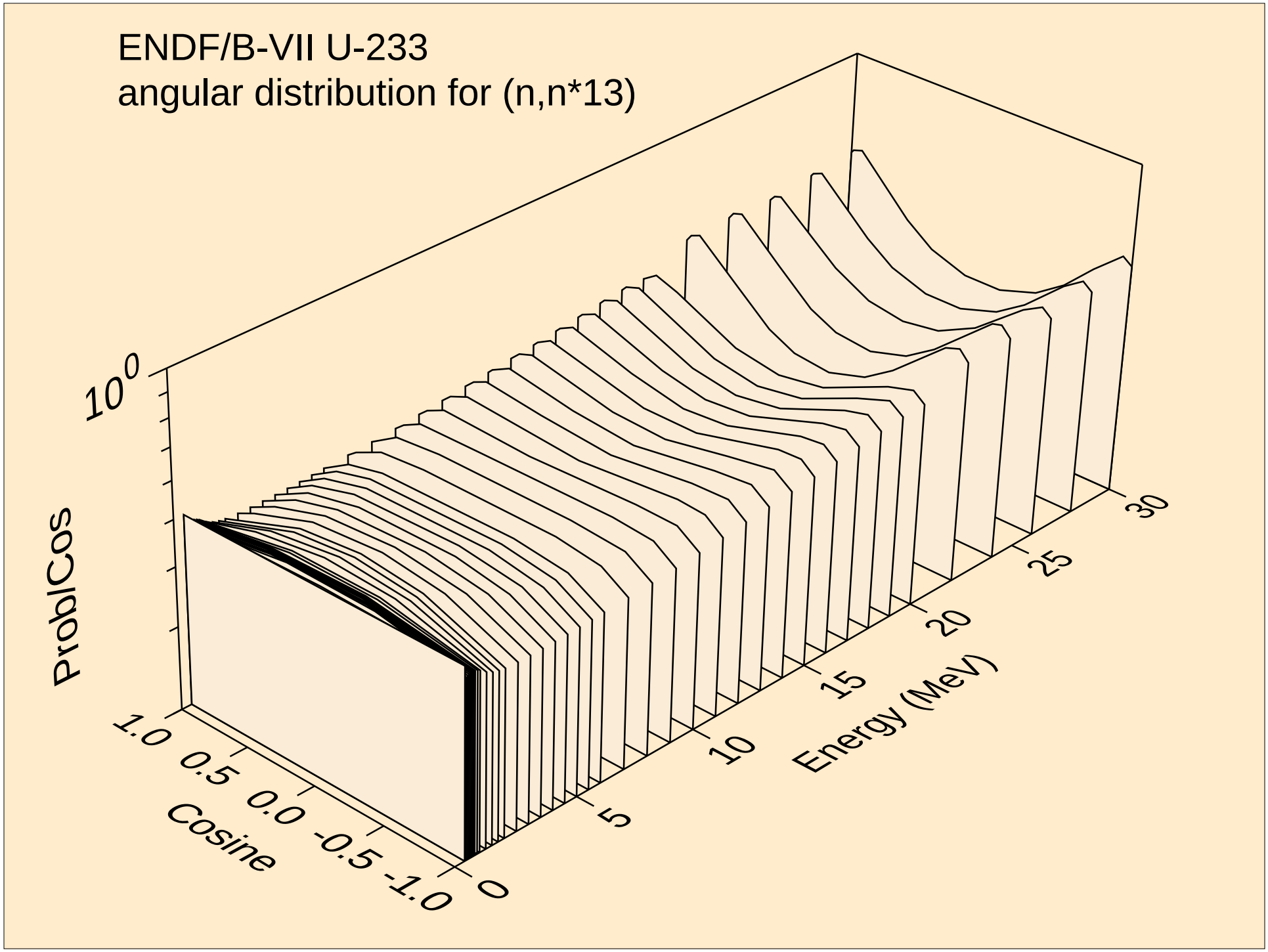
ENDF/B-VII U-233
angular distribution for (n,n*13)
$10^0$
ProbCos
1.0
0.5
0.0
-0.5
-1.0
Cosine
0
5
10
15
20
25
30
Energy (MeV)

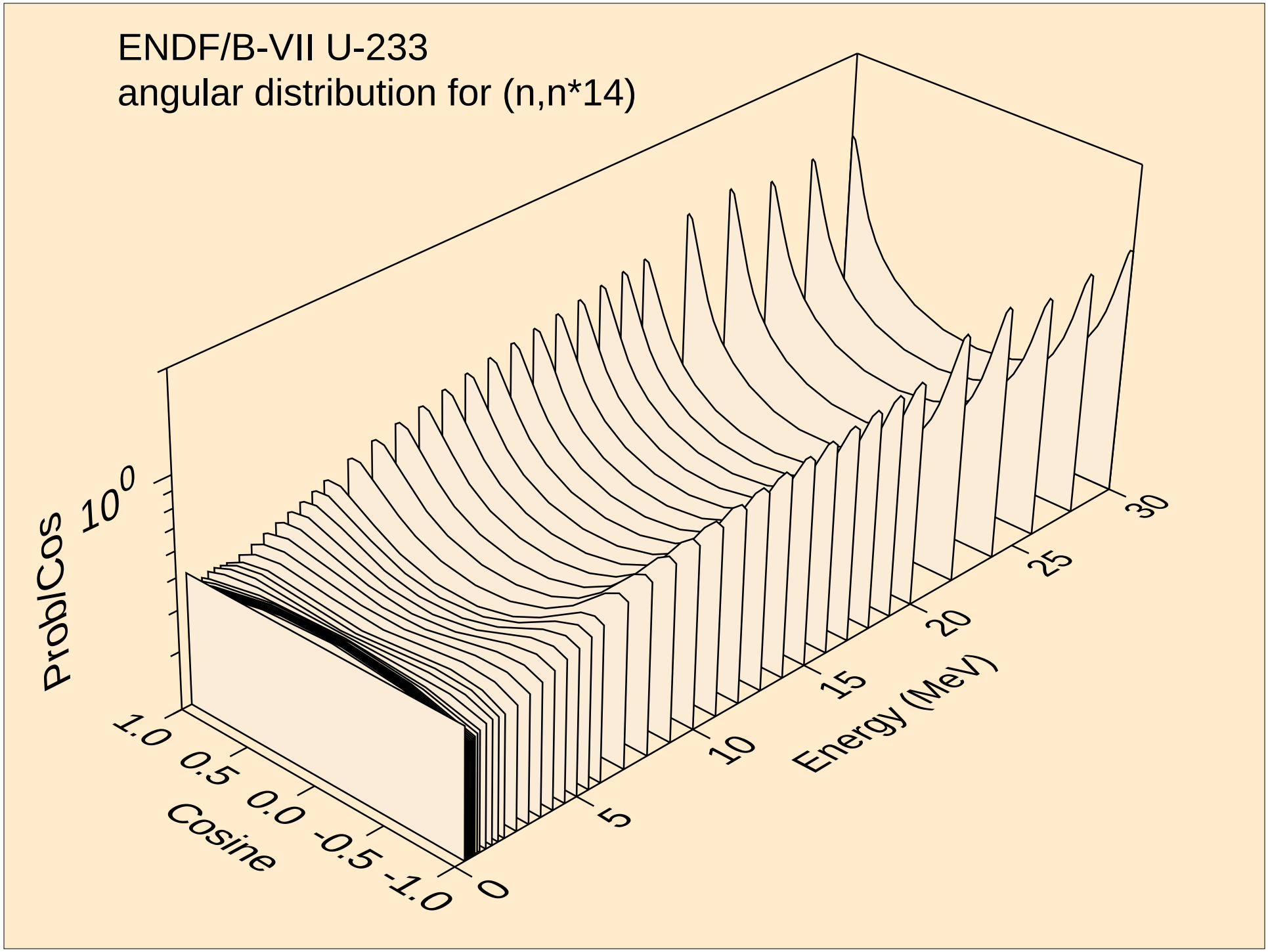
ENDF/B-VII U-233
angular distribution for (n,n*14)
ProblCos
$10^0$
1.0
0.5
0.0
-0.5
-1.0
Cosine
0
5
10
15
20
25
30
Energy (MeV)

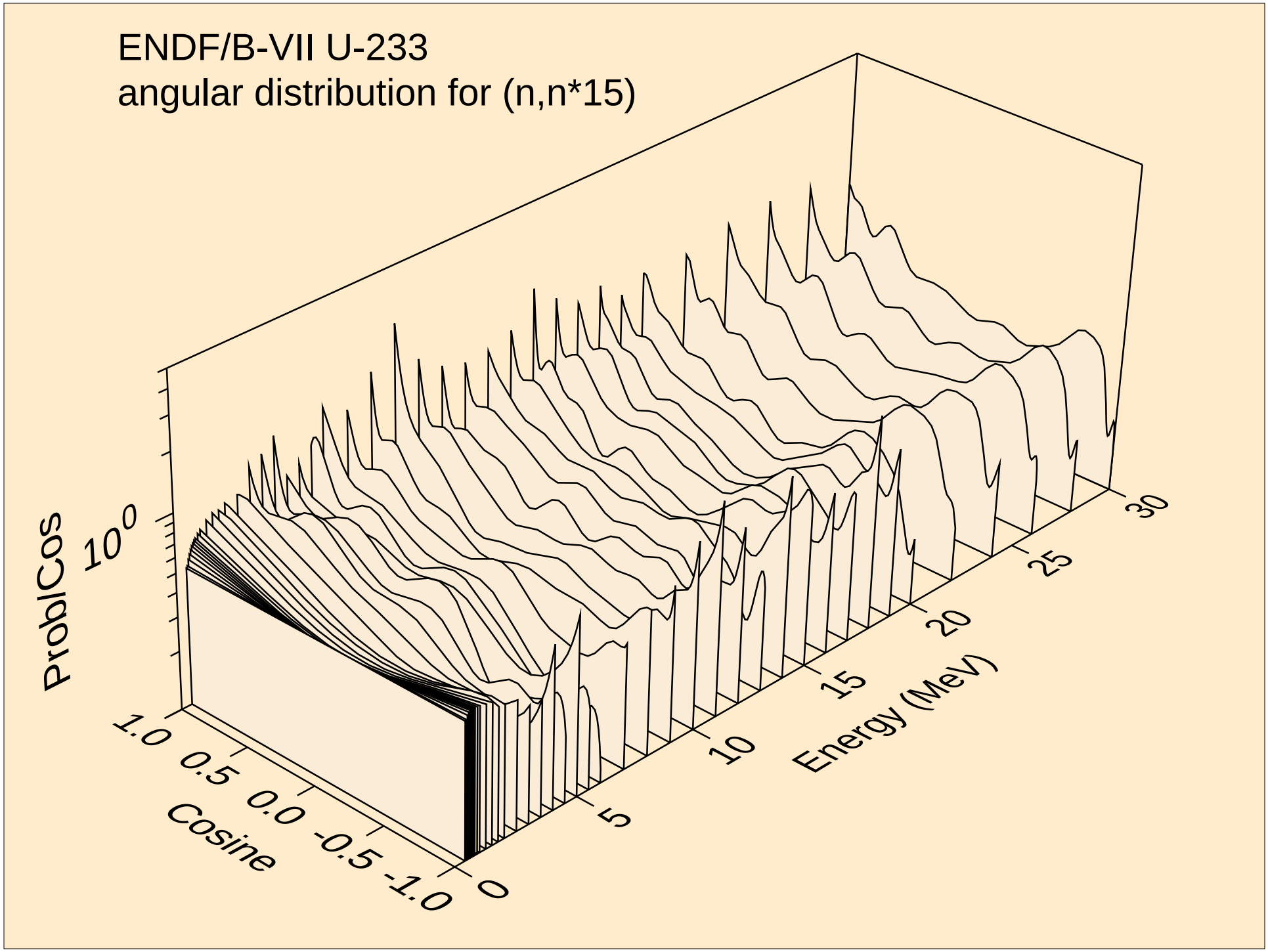
ENDF/B-VII U-233
angular distribution for (n,n*15)
ProblCos
$10^0$
1.0
0.5
0.0
-0.5
-1.0
Cosine
0
5
10
15
20
25
30
Energy (MeV)

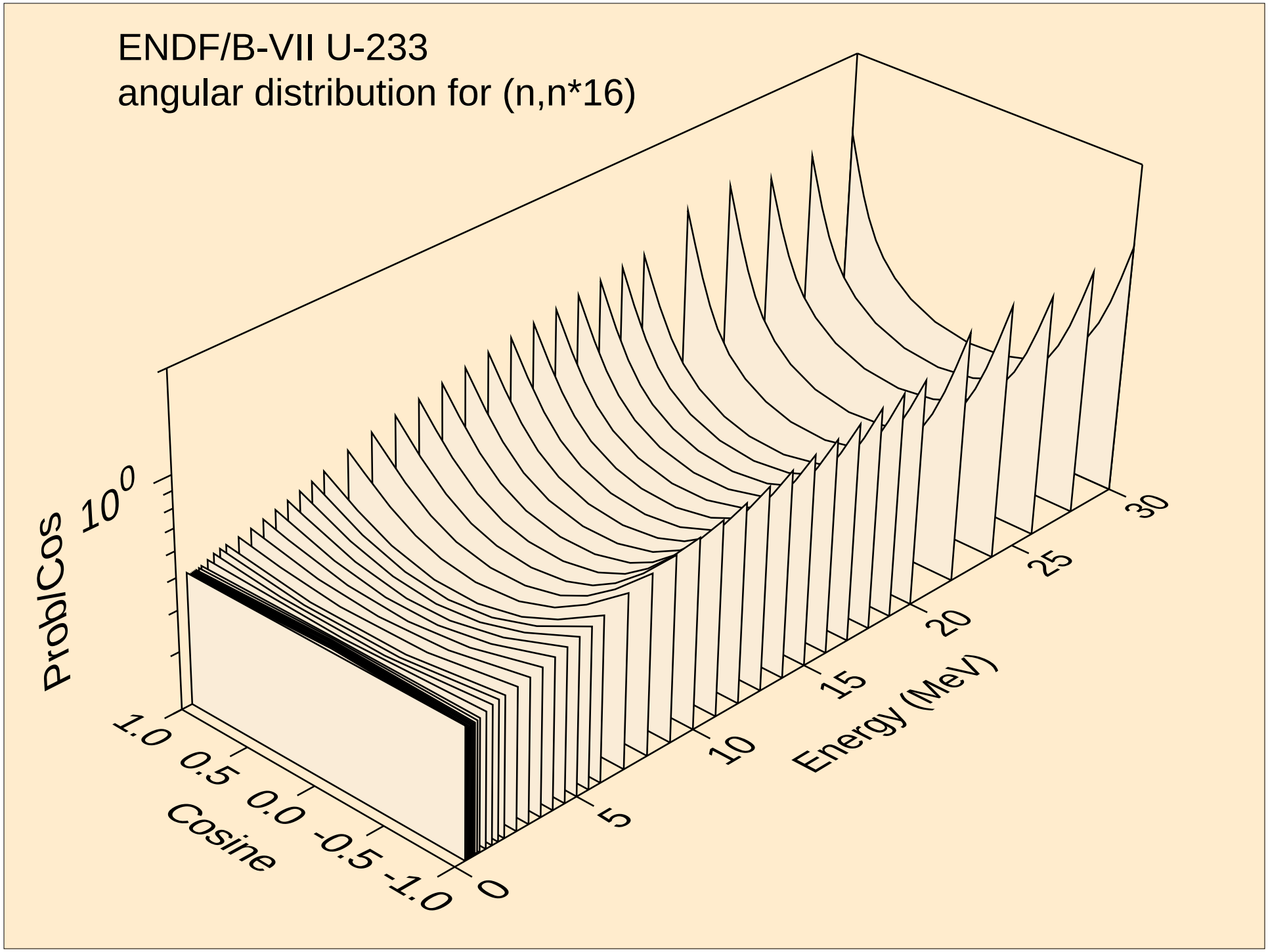
ENDF/B-VII U-233
angular distribution for (n,n*16)
ProblCos
$10^0$
1.0
0.5
0.0
-0.5
-1.0
Cosine
0
5
10
15
20
25
30
Energy (MeV)

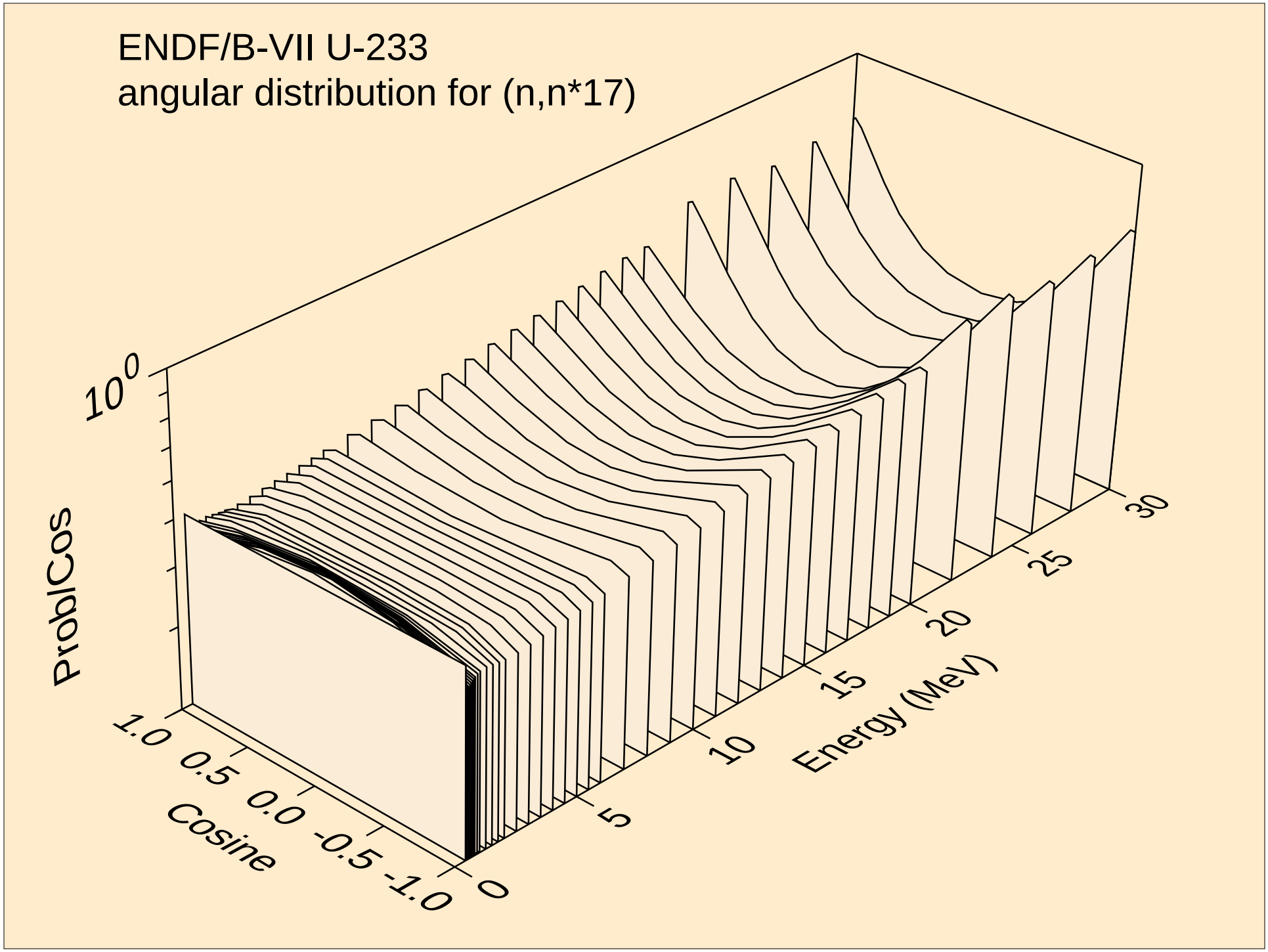
ENDF/B-VII U-233
angular distribution for (n,n*17)
$10^0$
ProbCos
1.0
0.5
0.0
-0.5
-1.0
Cosine
0
5
10
15
20
25
30
Energy (MeV)

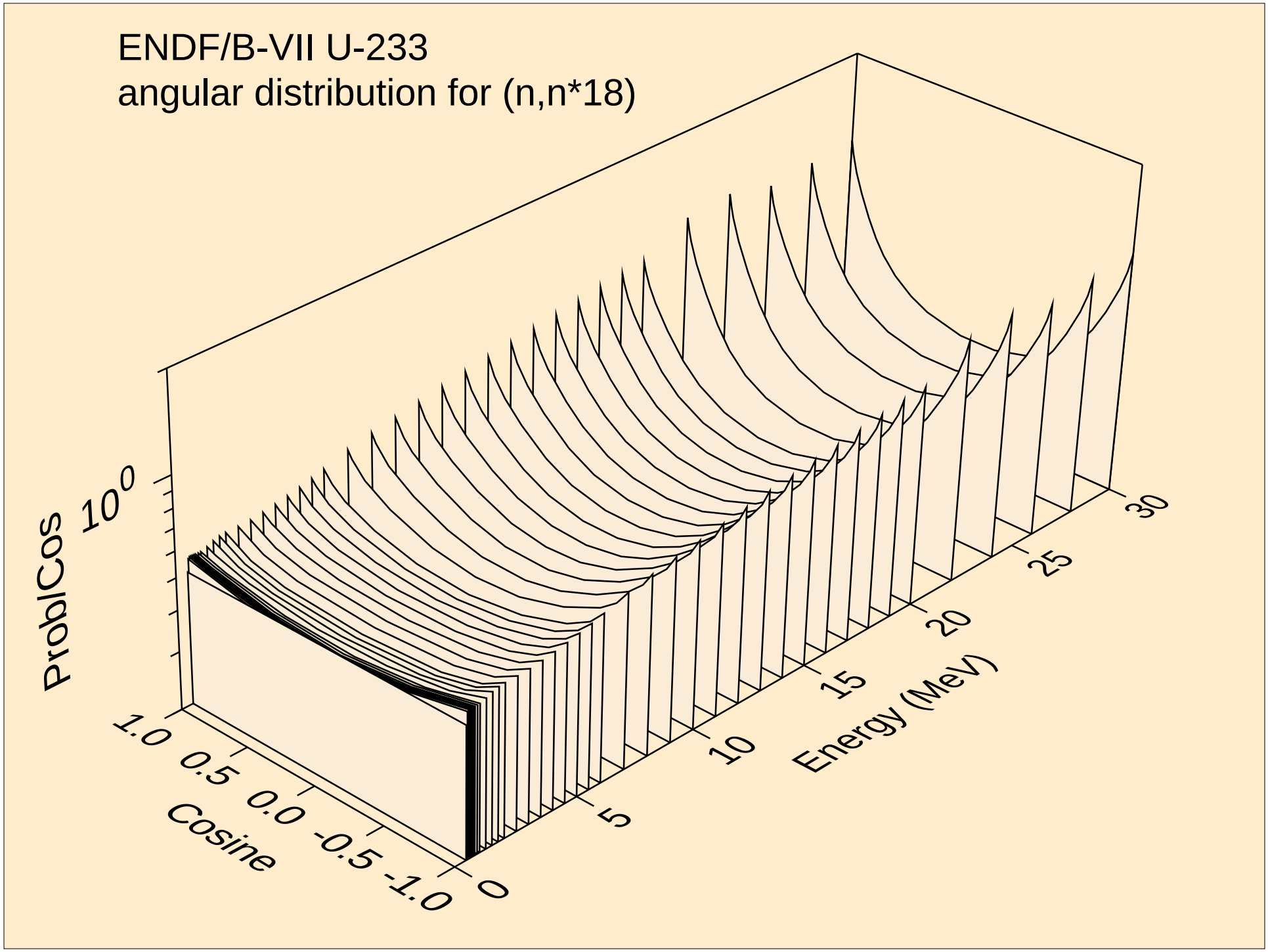
ENDF/B-VII U-233
angular distribution for (n,n*18)
ProblCos
$10^0$
1.0
0.5
0.0
-0.5
-1.0
Cosine
0
5
10
15
20
25
30
Energy (MeV)

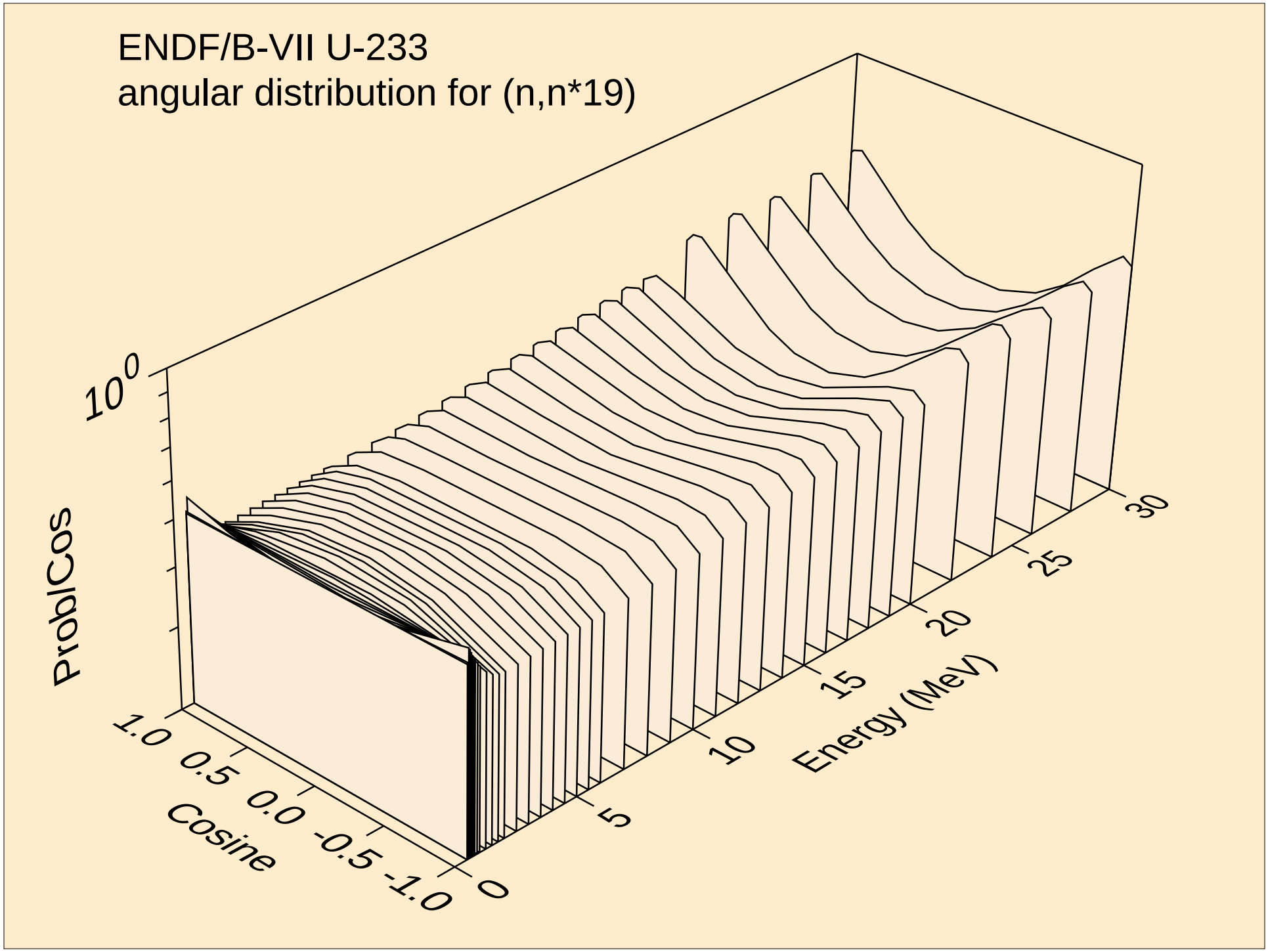
ENDF/B-VII U-233
angular distribution for (n,n*19)
$10^0$
ProbCos
1.0
0.5
0.0
-0.5
-1.0
Cosine
0
5
10
15
20
25
30
Energy (MeV)

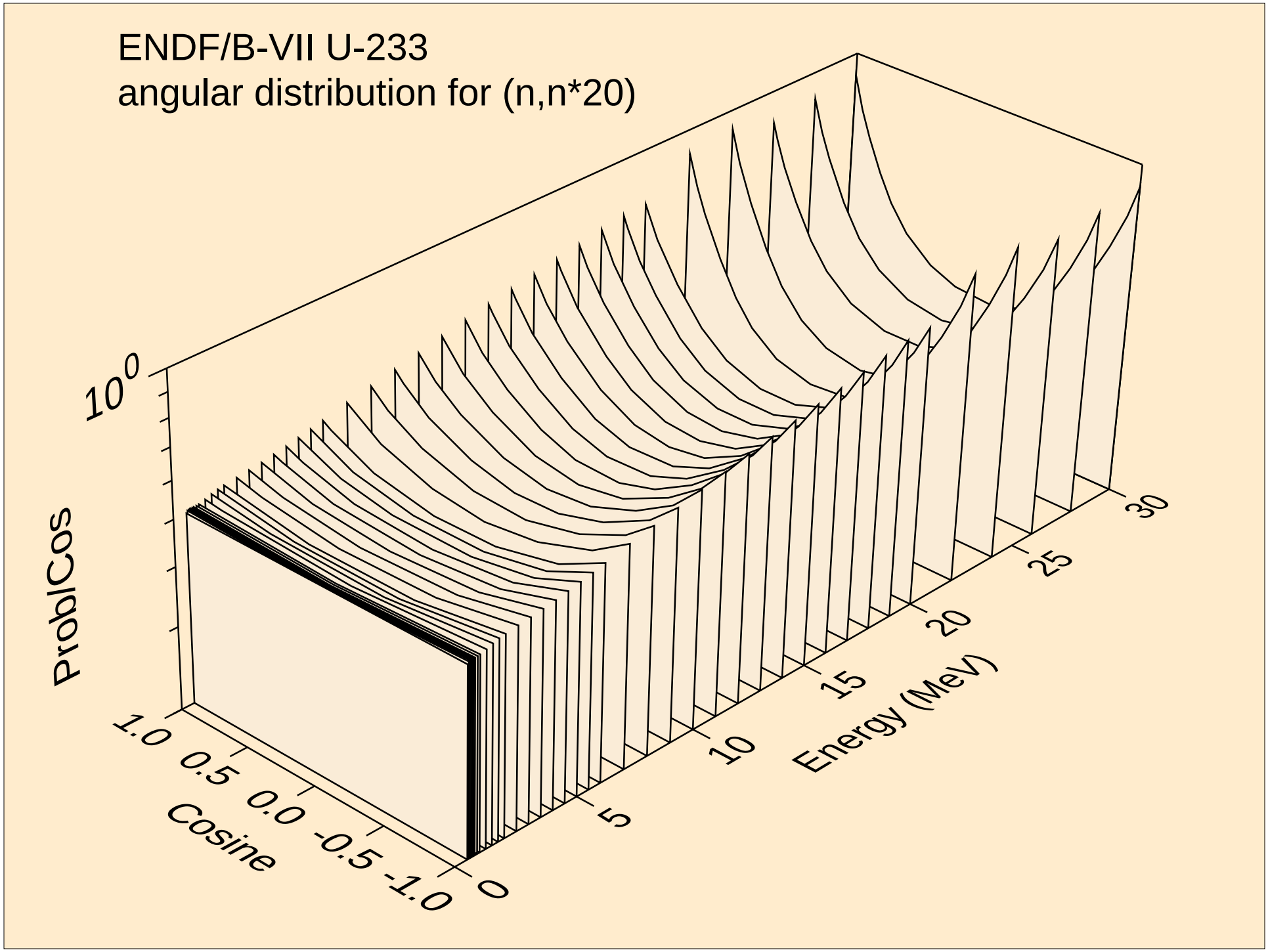
ENDF/B-VII U-233
angular distribution for (n,n*20)
$10^0$
ProbCos
1.0
0.5
0.0
-0.5
-1.0
Cosine
0
5
10
15
20
25
30
Energy (MeV)

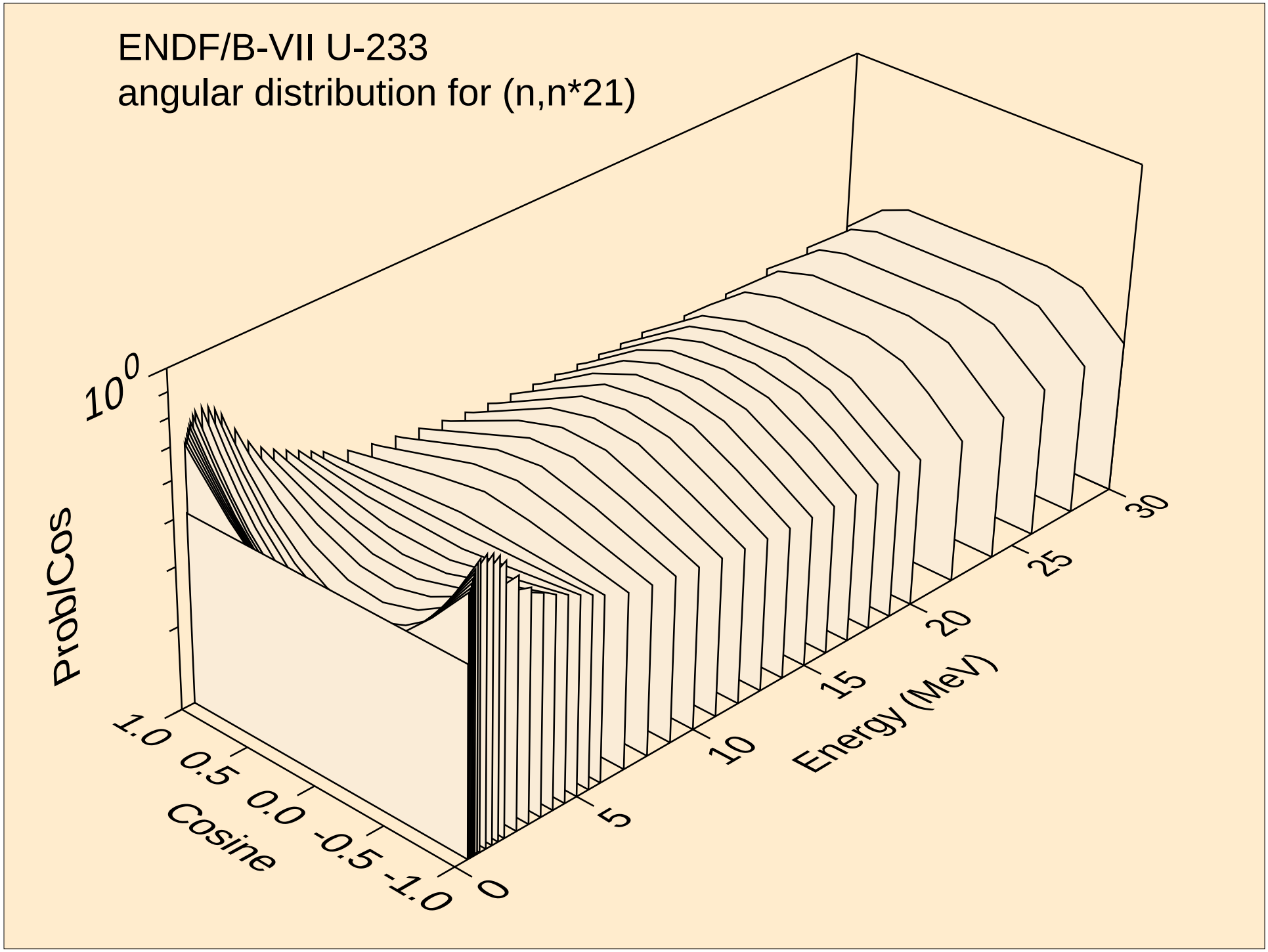
ENDF/B-VII U-233
angular distribution for (n,n*21)
$10^0$
ProbCos
1.0
0.5
0.0
-0.5
-1.0
Cosine
0
5
10
15
20
25
30
Energy (MeV)

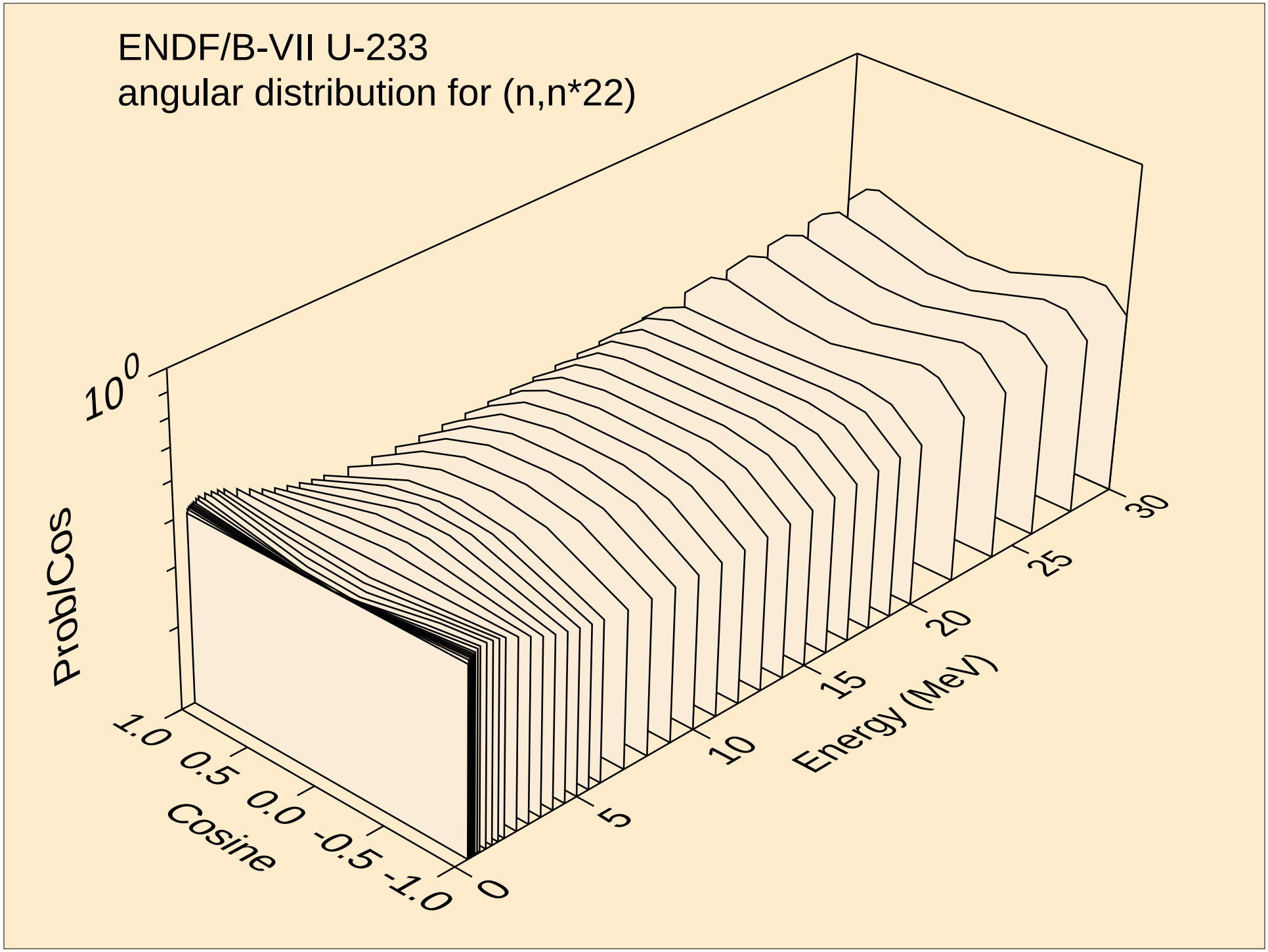
ENDF/B-VII U-233
angular distribution for (n,n*22)
$10^0$
ProbCos
1.0
0.5
0.0
-0.5
-1.0
Cosine
0
5
10
15
20
25
30
Energy (MeV)

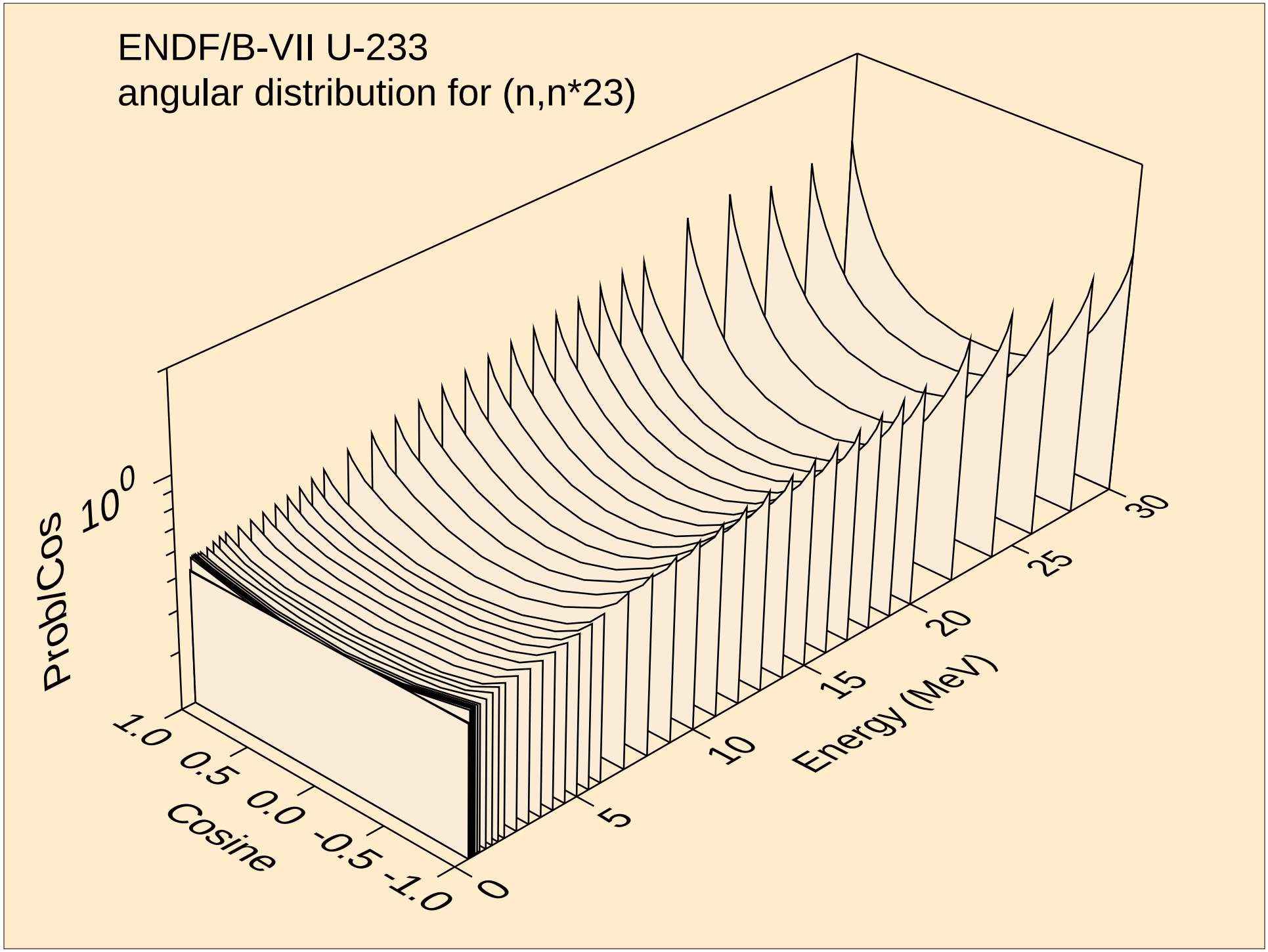
ENDF/B-VII U-233
angular distribution for (n,n*23)
ProblCos
$10^0$
1.0
0.5
0.0
-0.5
-1.0
Cosine
0
5
10
15
20
25
30
Energy (MeV)

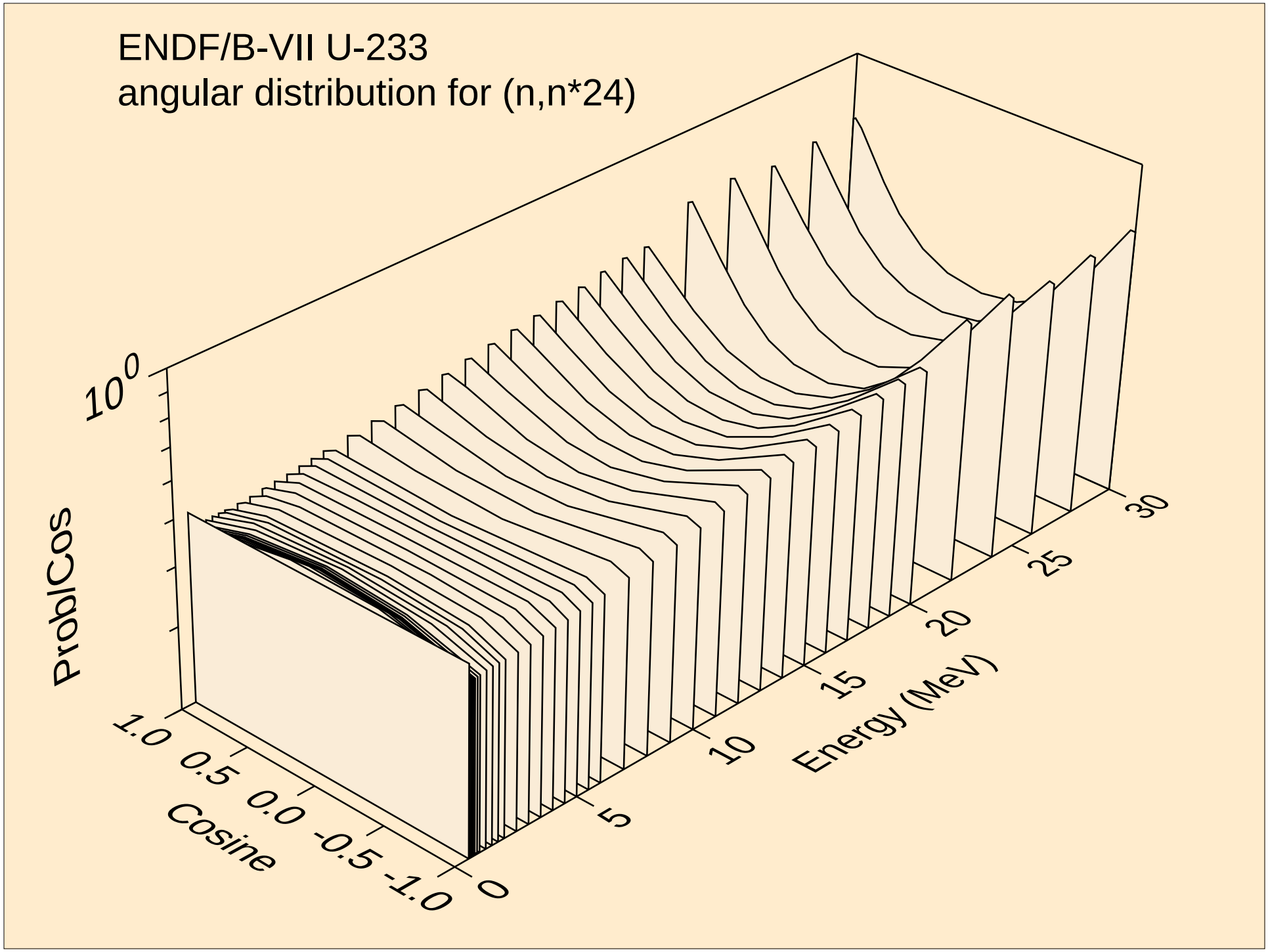
ENDF/B-VII U-233
angular distribution for (n,n*24)
ProbCos
$10^0$
Cosine
1.0
0.5
0.0
-0.5
-1.0
Energy (MeV)
0
5
10
15
20
25
30

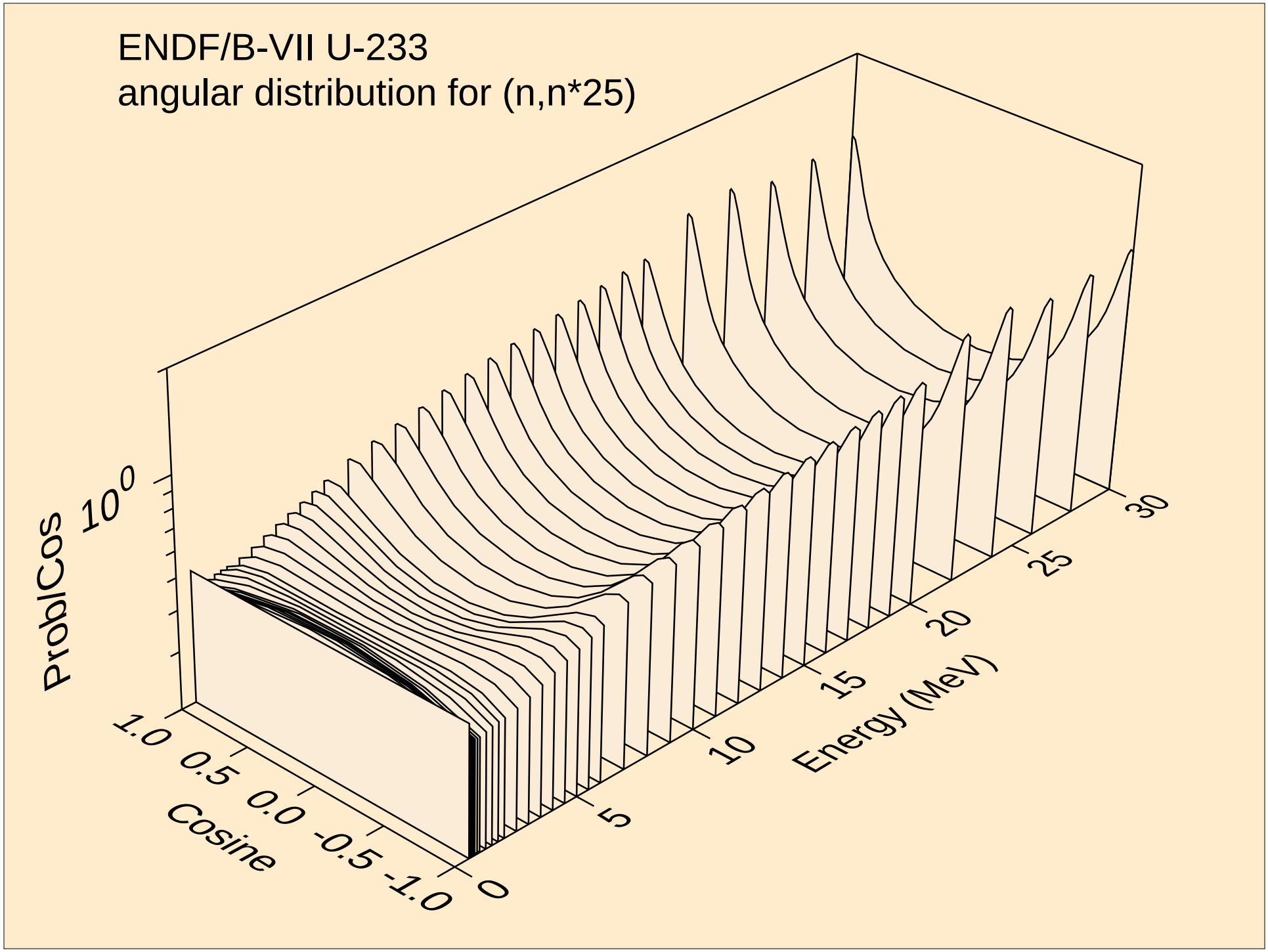
ENDF/B-VII U-233
angular distribution for (n,n*25)
ProblCos
$10^0$
1.0
0.5
0.0
-0.5
-1.0
Cosine
0
5
10
15
20
25
30
Energy (MeV)

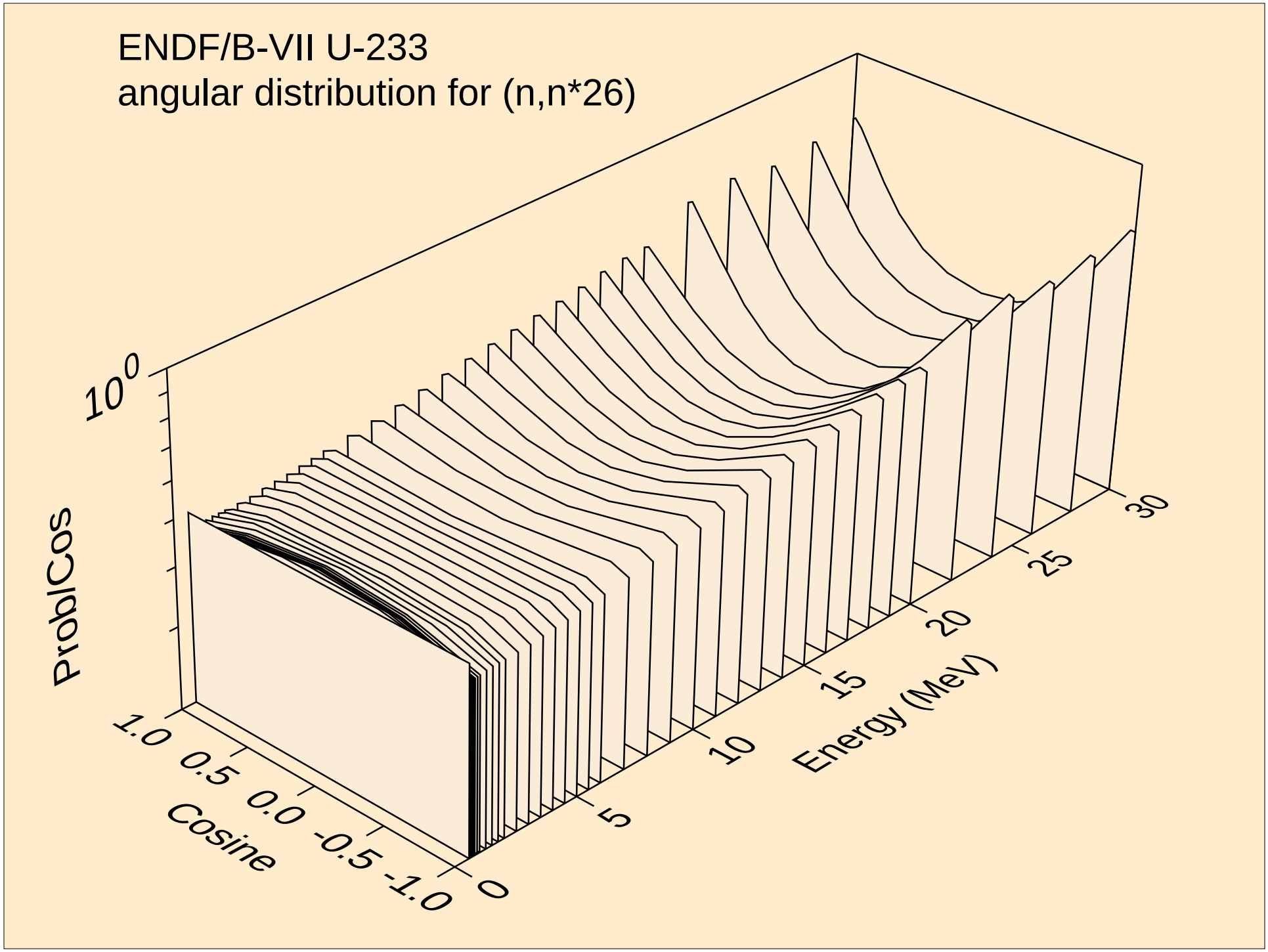
ENDF/B-VII U-233
angular distribution for (n,n*26)
$10^0$
ProbCos
1.0
0.5
0.0
-0.5
-1.0
Cosine
0
5
10
15
20
25
30
Energy (MeV)

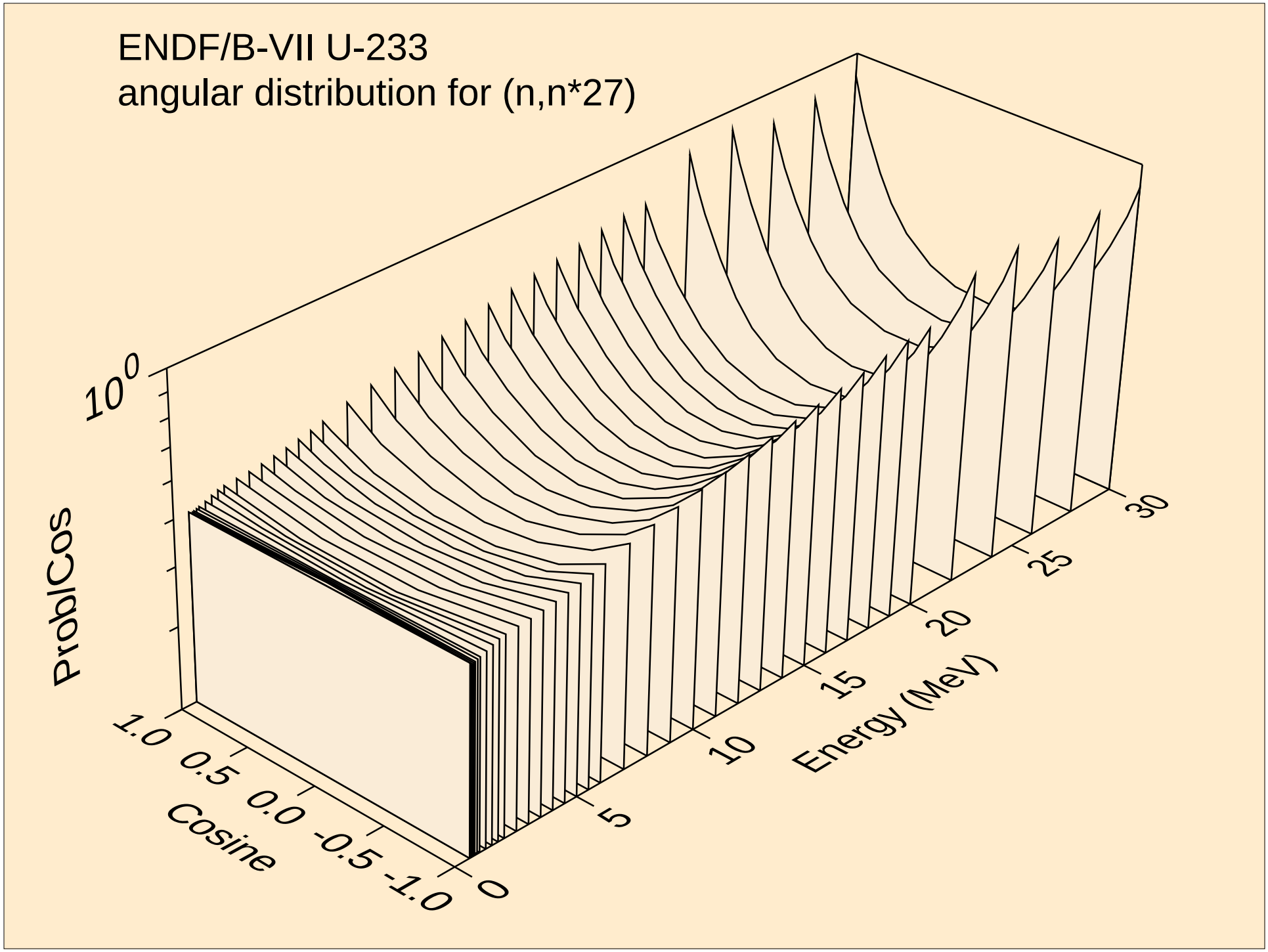
ENDF/B-VII U-233
angular distribution for (n,n*27)
$10^0$
ProbCos
1.0
0.5
0.0
-0.5
-1.0
Cosine
0
5
10
15
20
25
30
Energy (MeV)

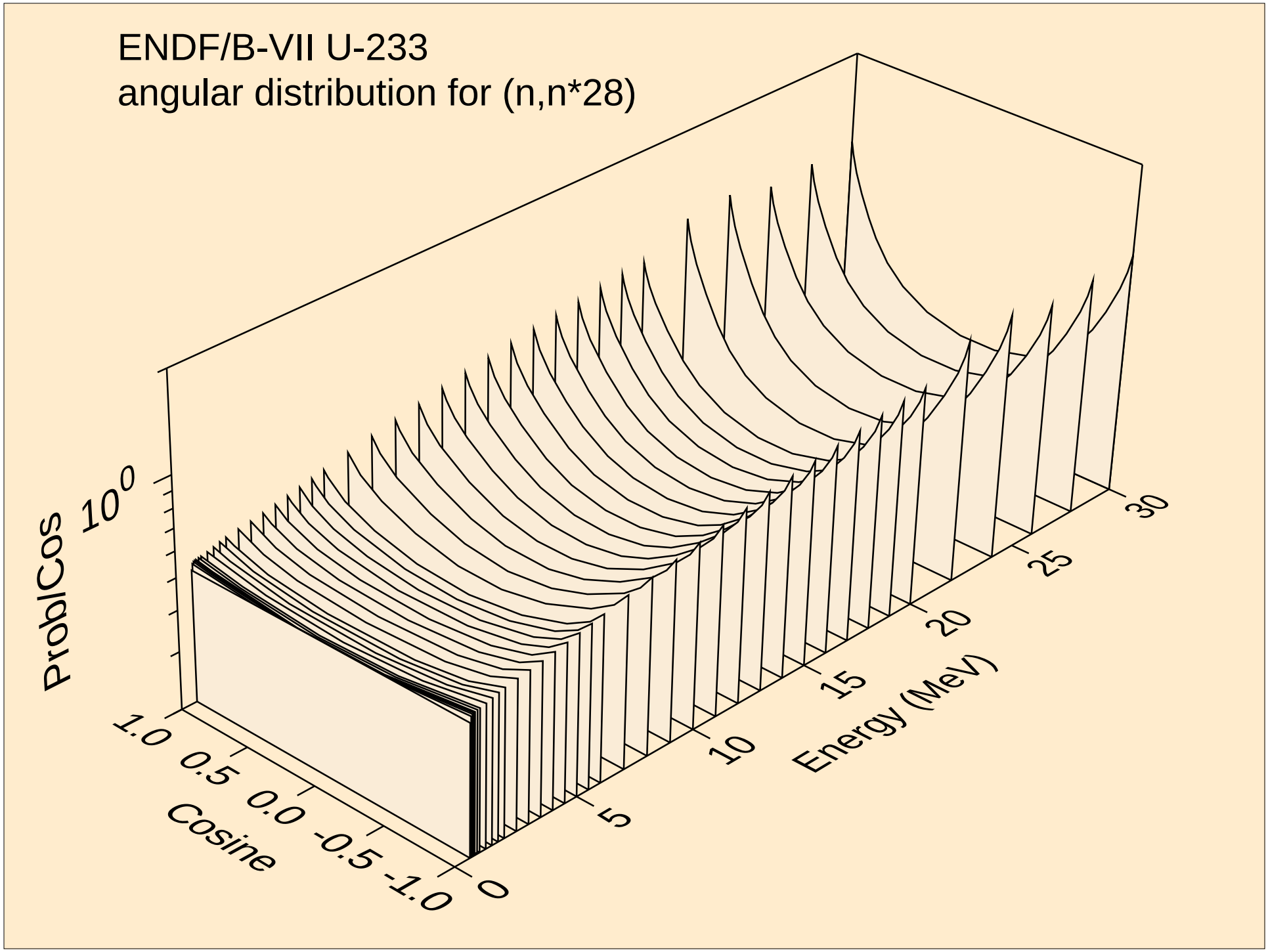
ENDF/B-VII U-233
angular distribution for (n,n*28)
ProblCos
$10^0$
1.0
0.5
0.0
-0.5
-1.0
Cosine
0
5
10
15
20
25
30
Energy (MeV)

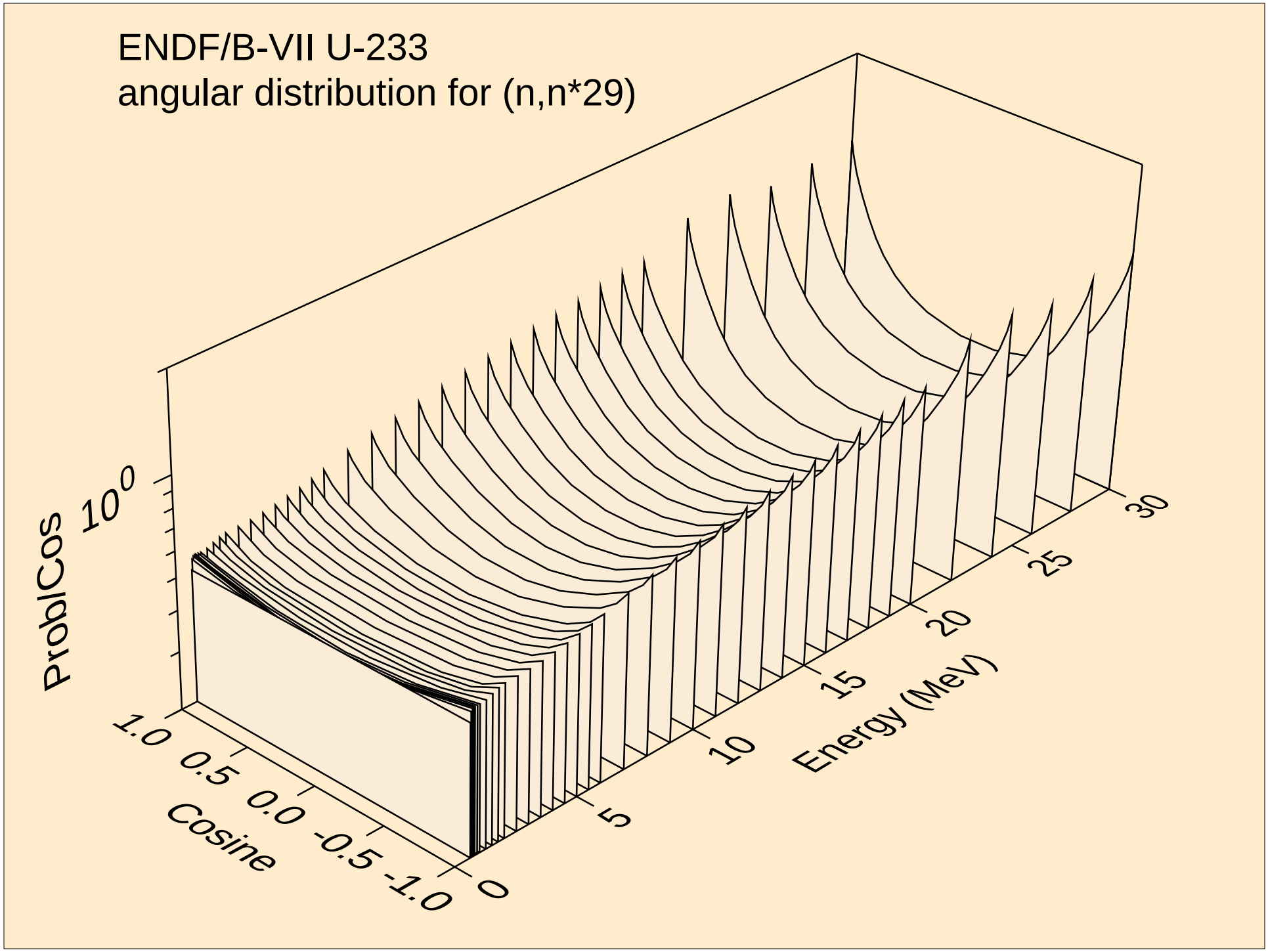
ENDF/B-VII U-233
angular distribution for (n,n*29)
ProblCos
$10^0$
1.0
0.5
0.0
-0.5
-1.0
Cosine
0
5
10
15
20
25
30
Energy (MeV)

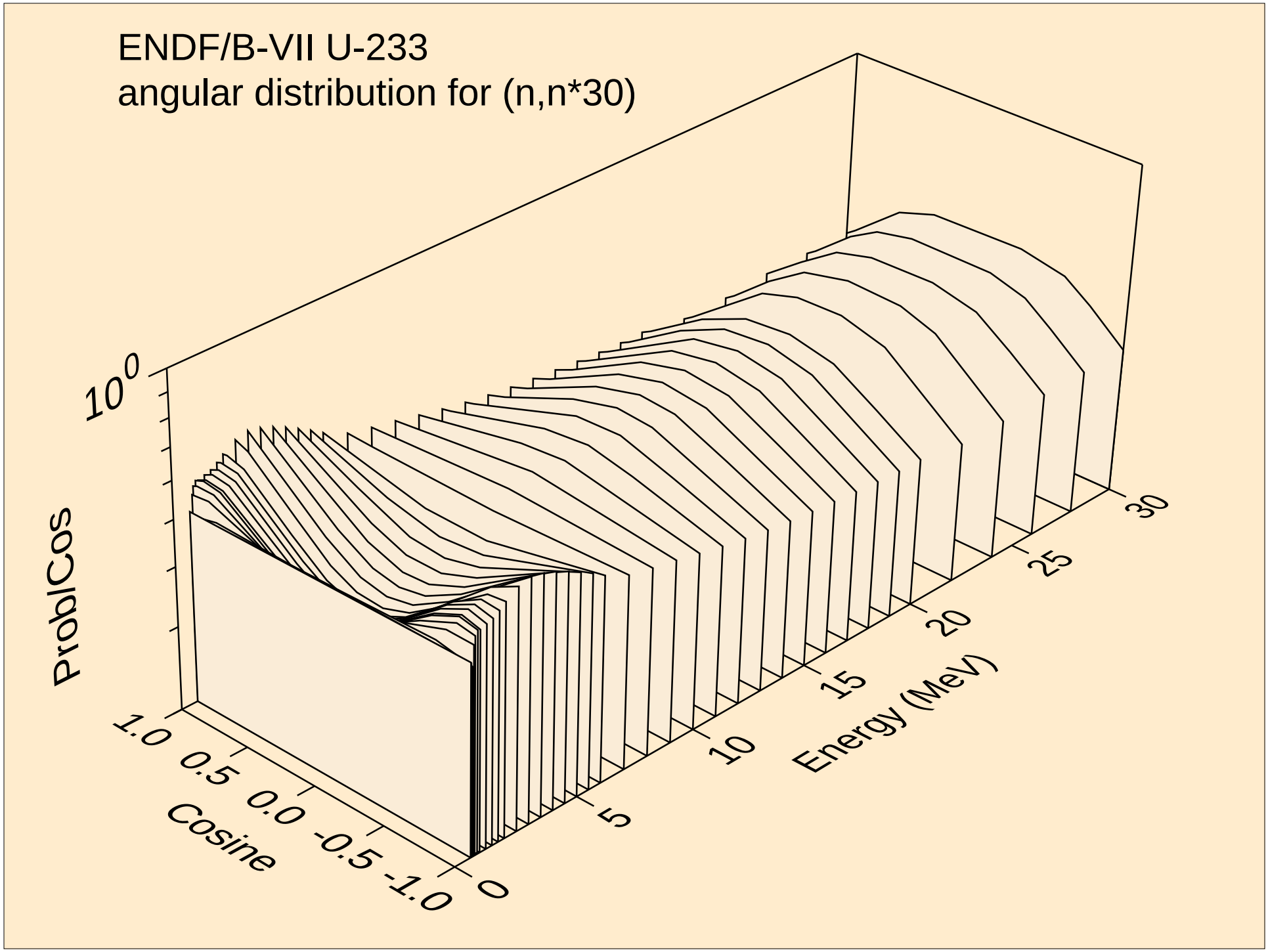
ENDF/B-VII U-233
angular distribution for (n,n*30)
$10^0$
ProbCos
1.0
0.5
0.0
-0.5
-1.0
Cosine
0
5
10
15
20
25
30
Energy (MeV)

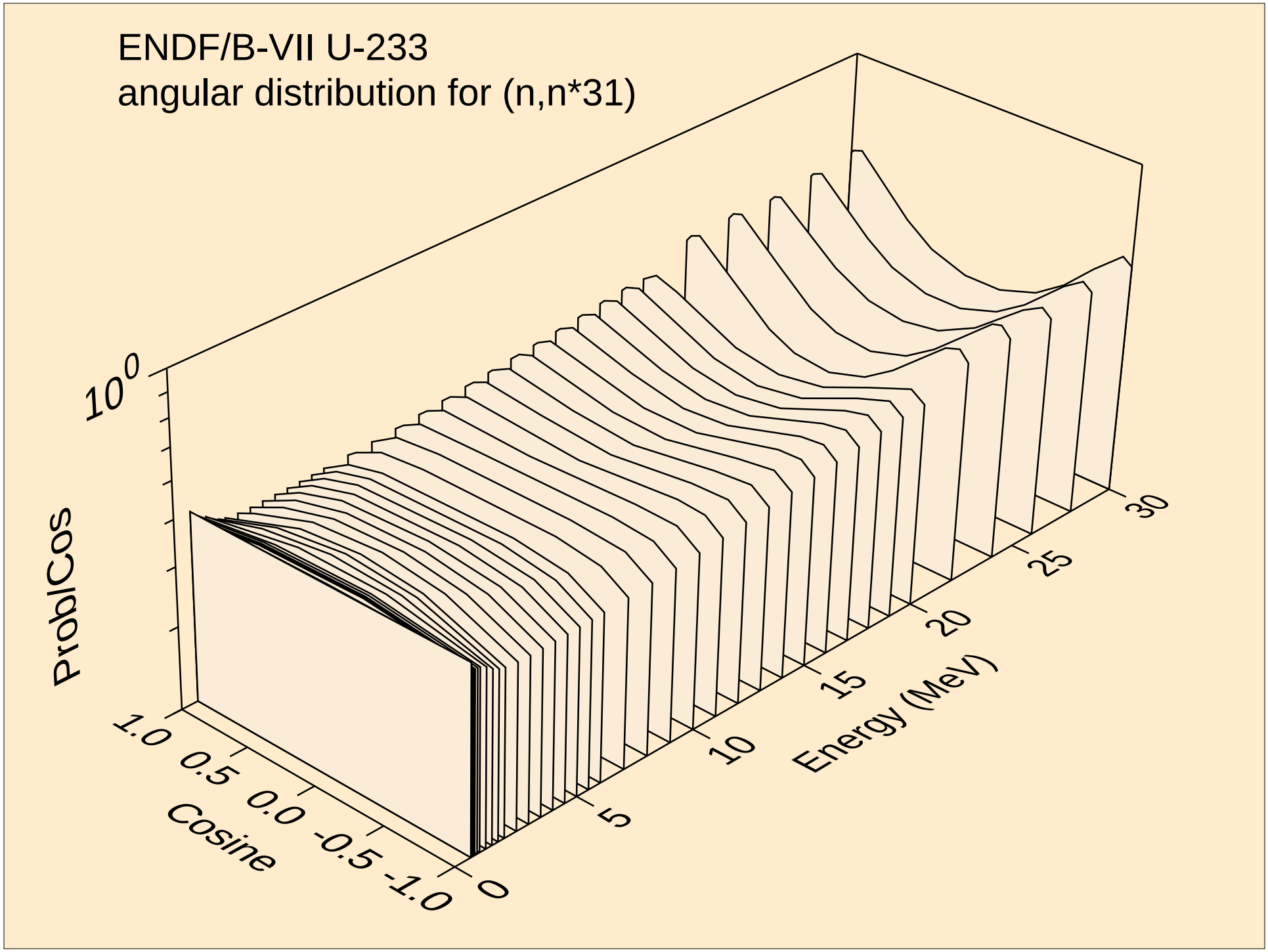
ENDF/B-VII U-233
angular distribution for (n,n*31)
$10^0$
ProbCos
1.0
0.5
0.0
-0.5
-1.0
Cosine
0
5
10
15
20
25
30
Energy (MeV)

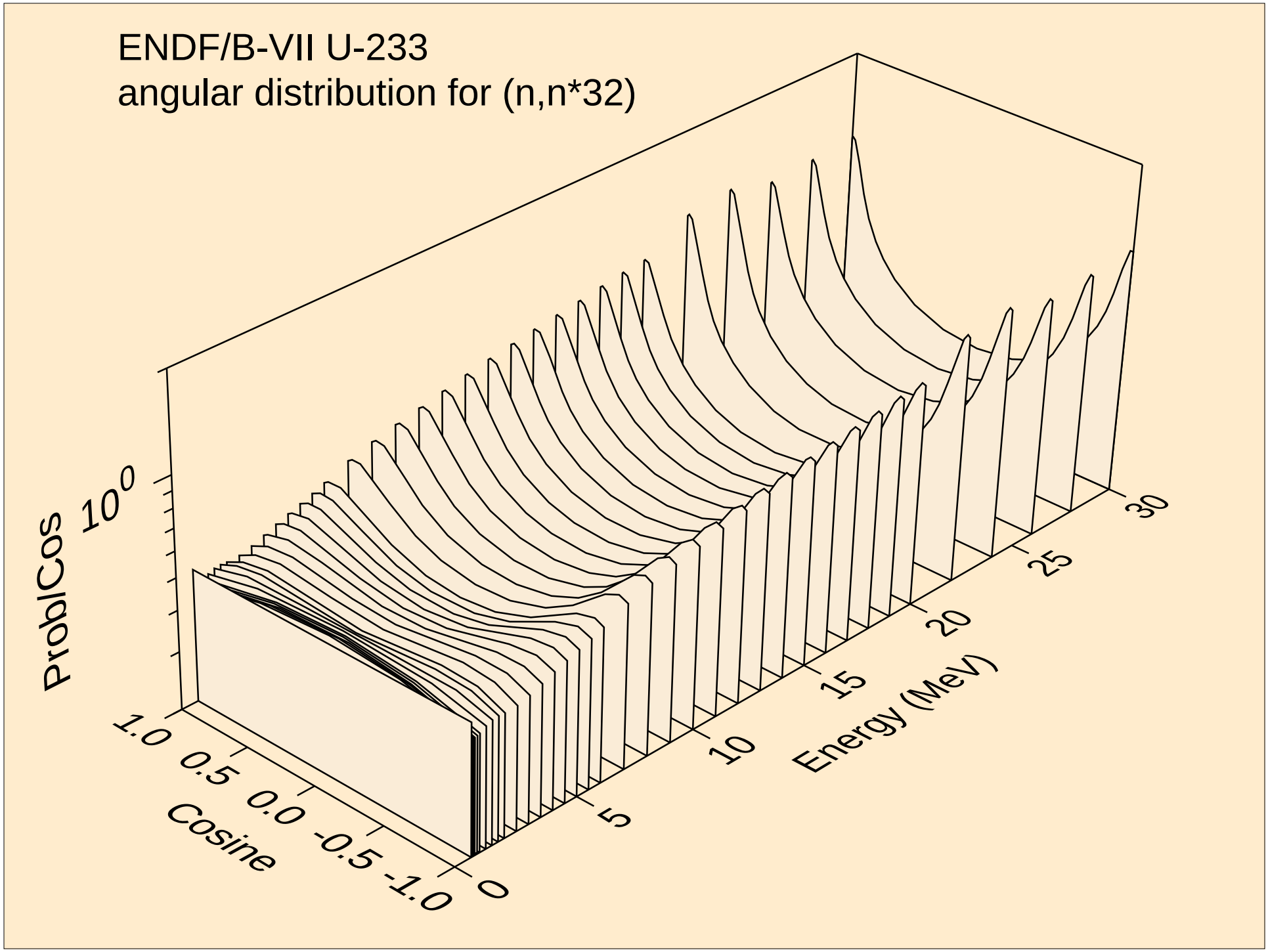
ENDF/B-VII U-233
angular distribution for (n,n*32)
ProblCos
$10^0$
1.0
0.5
0.0
-0.5
-1.0
Cosine
0
5
10
15
20
25
30
Energy (MeV)

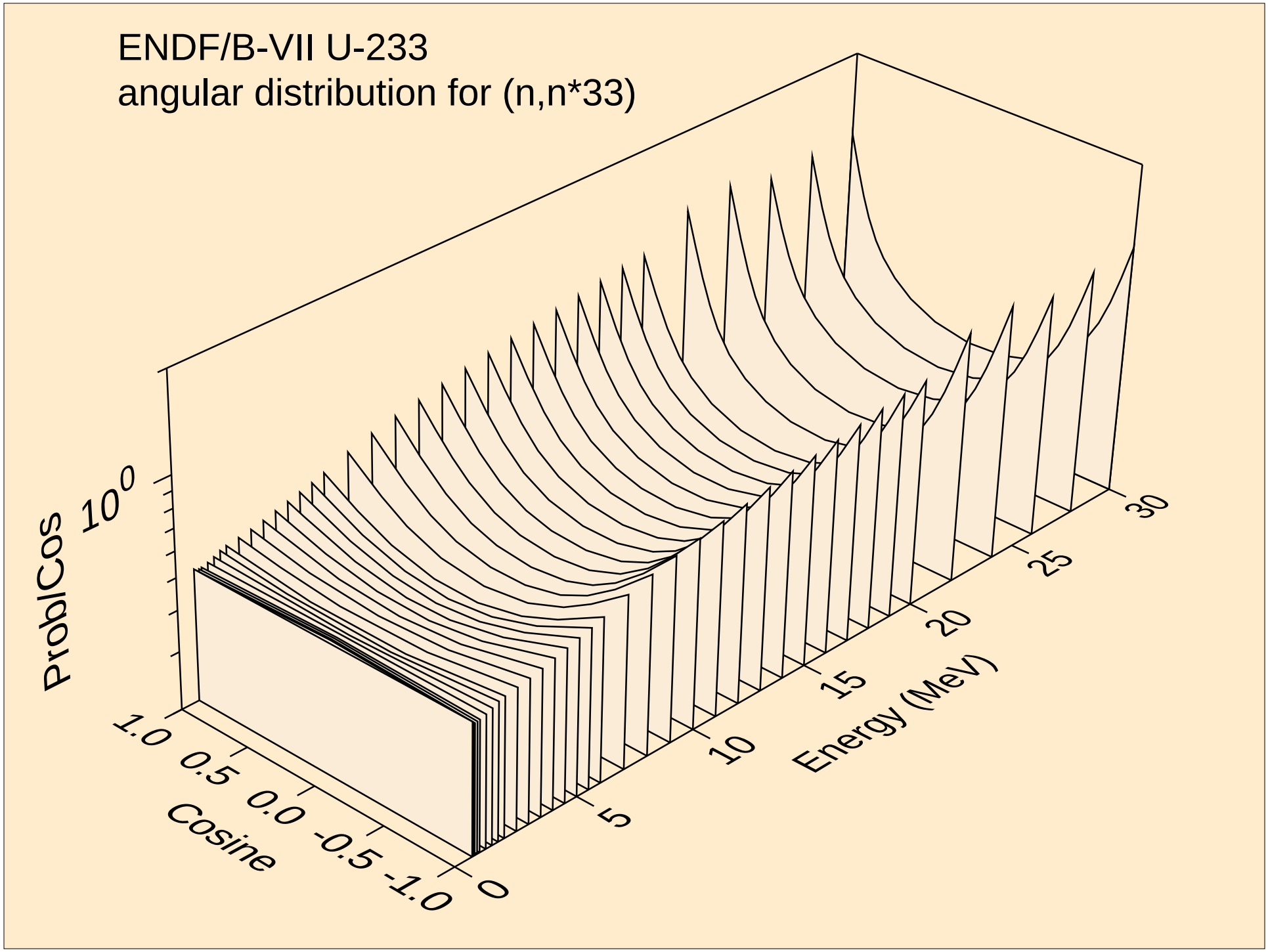
ENDF/B-VII U-233
angular distribution for (n,n*33)
ProblCos
$10^0$
1.0
0.5
0.0
-0.5
-1.0
Cosine
0
5
10
15
20
25
30
Energy (MeV)

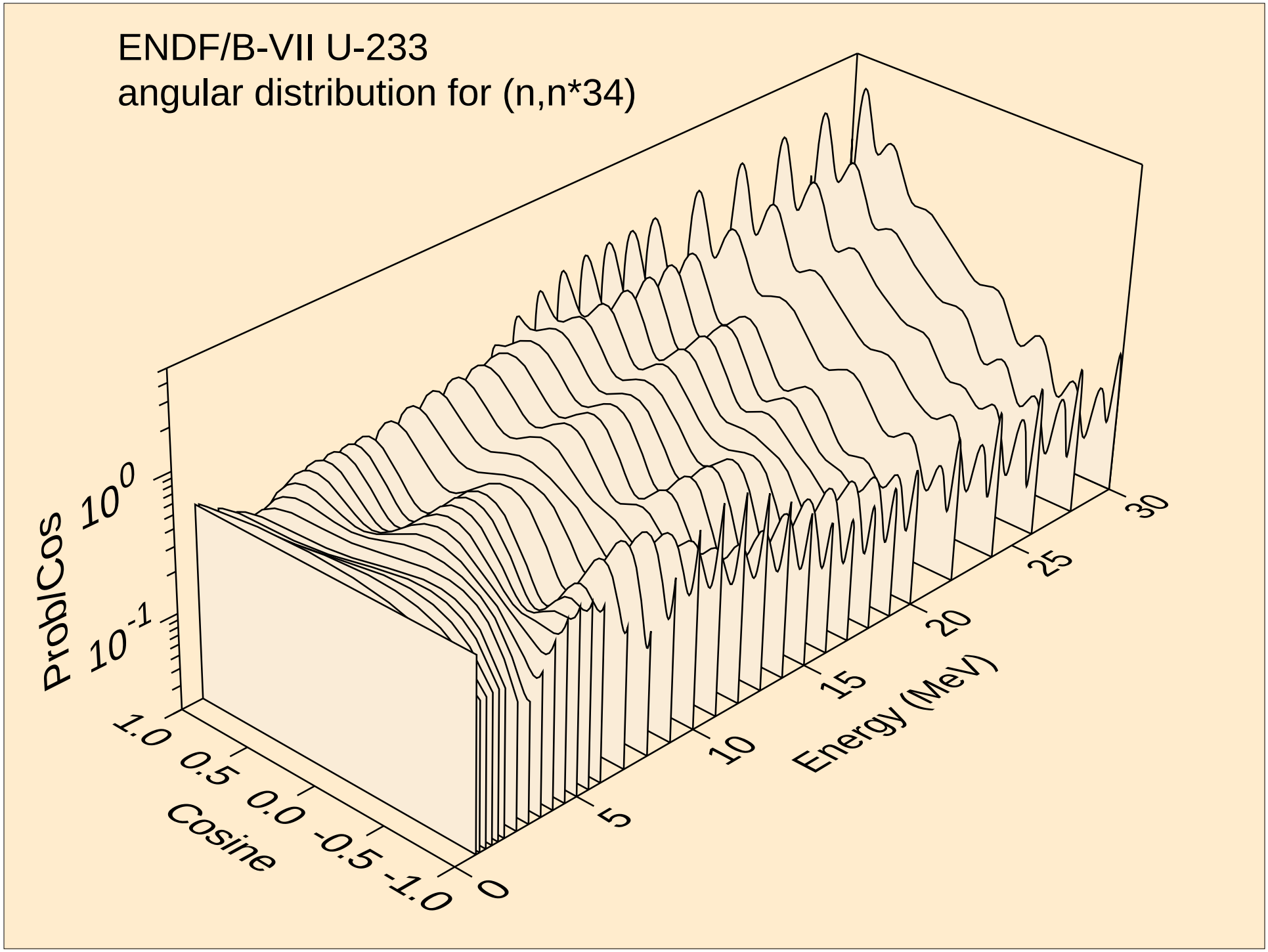
ENDF/B-VII U-233
angular distribution for (n,n*34)
ProbCos
$10^0$
$10^{-1}$
1.0
0.5
0.0
-0.5
-1.0
Cosine
0
5
10
15
20
25
30
Energy (MeV)

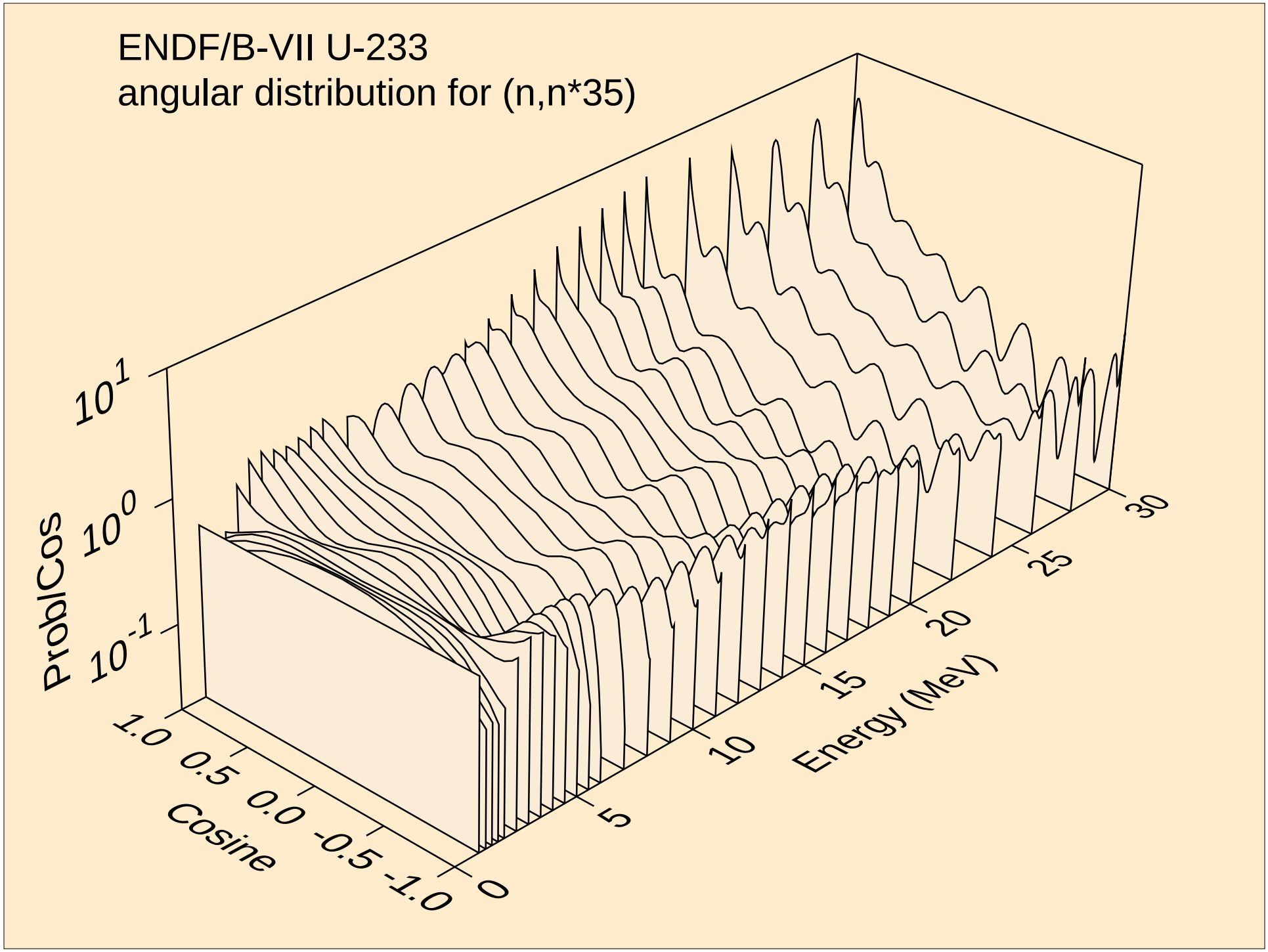
ENDF/B-VII U-233
angular distribution for (n,n*35)
ProbCos
$10^{1}$
$10^{0}$
$10^{-1}$
Cosine
1.0
0.5
0.0
-0.5
-1.0
Energy (MeV)
0
5
10
15
20
25
30

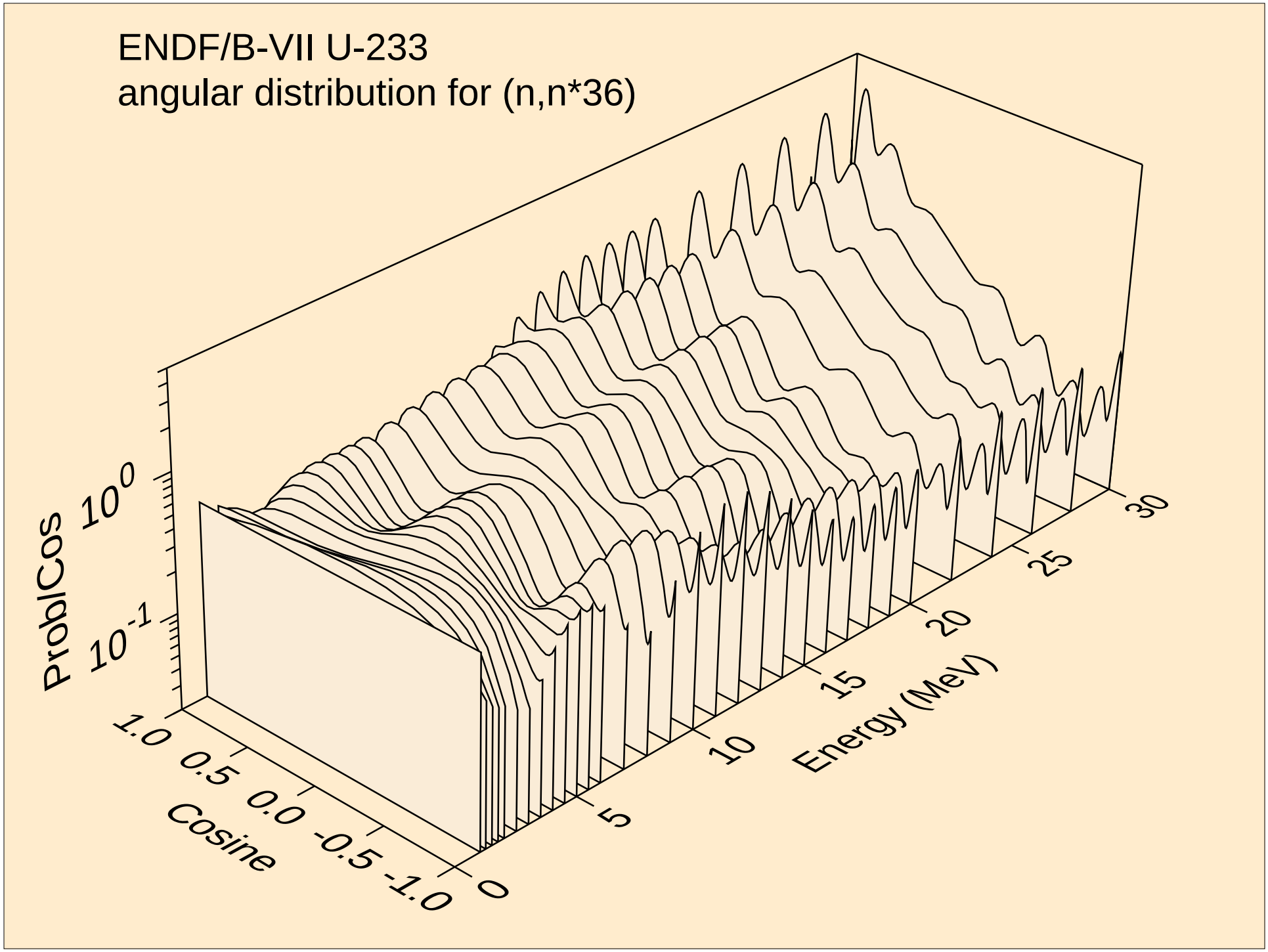
ENDF/B-VII U-233
angular distribution for (n,n*36)
ProbCos
$10^0$
$10^{-1}$
1.0
0.5
0.0
-0.5
-1.0
Cosine
0
5
10
15
20
25
30
Energy (MeV)

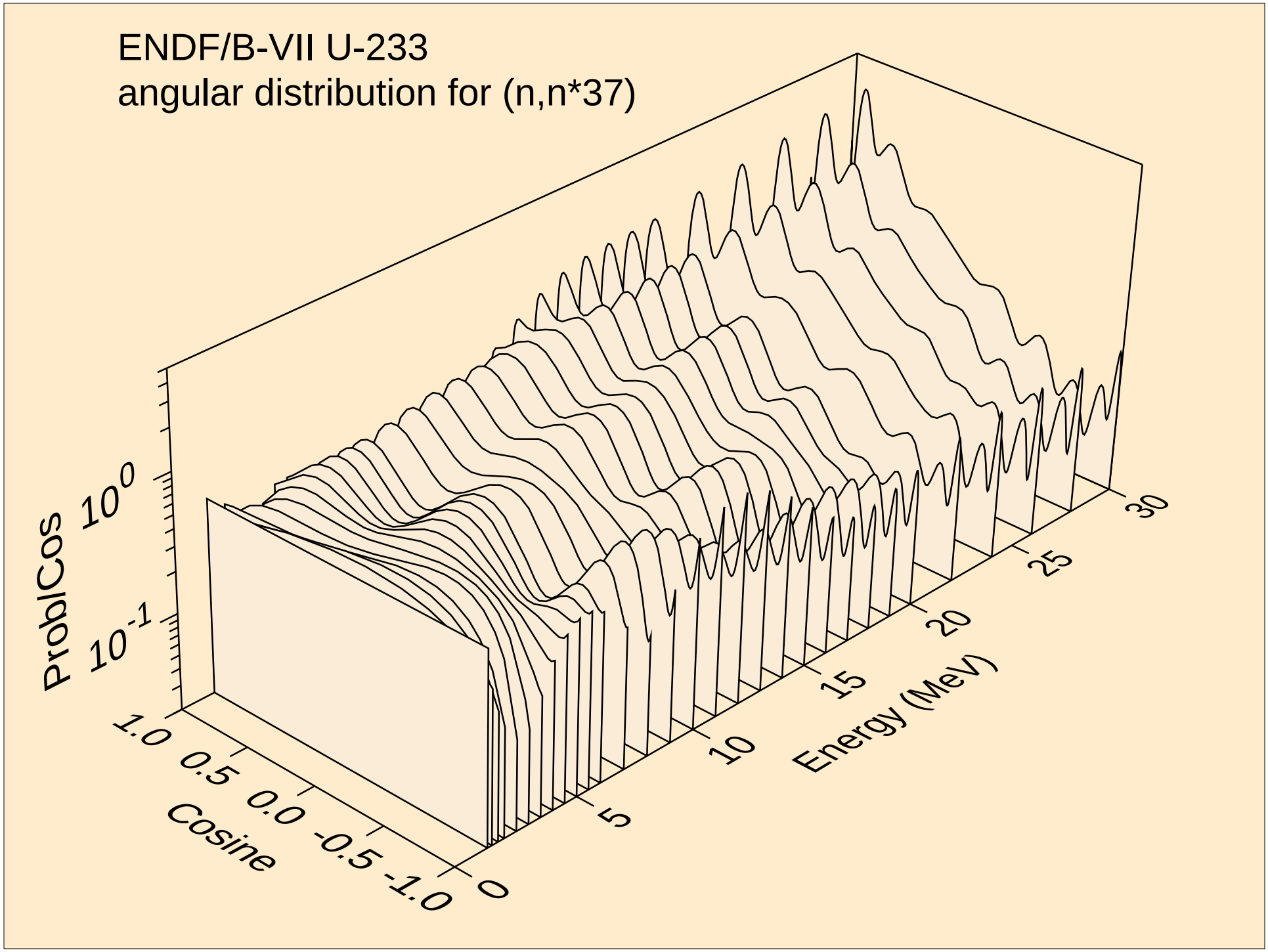
ENDF/B-VII U-233
angular distribution for (n,n*37)
ProbCos
$10^0$
$10^{-1}$
1.0
0.5
0.0
-0.5
-1.0
Cosine
0
5
10
15
20
25
30
Energy (MeV)

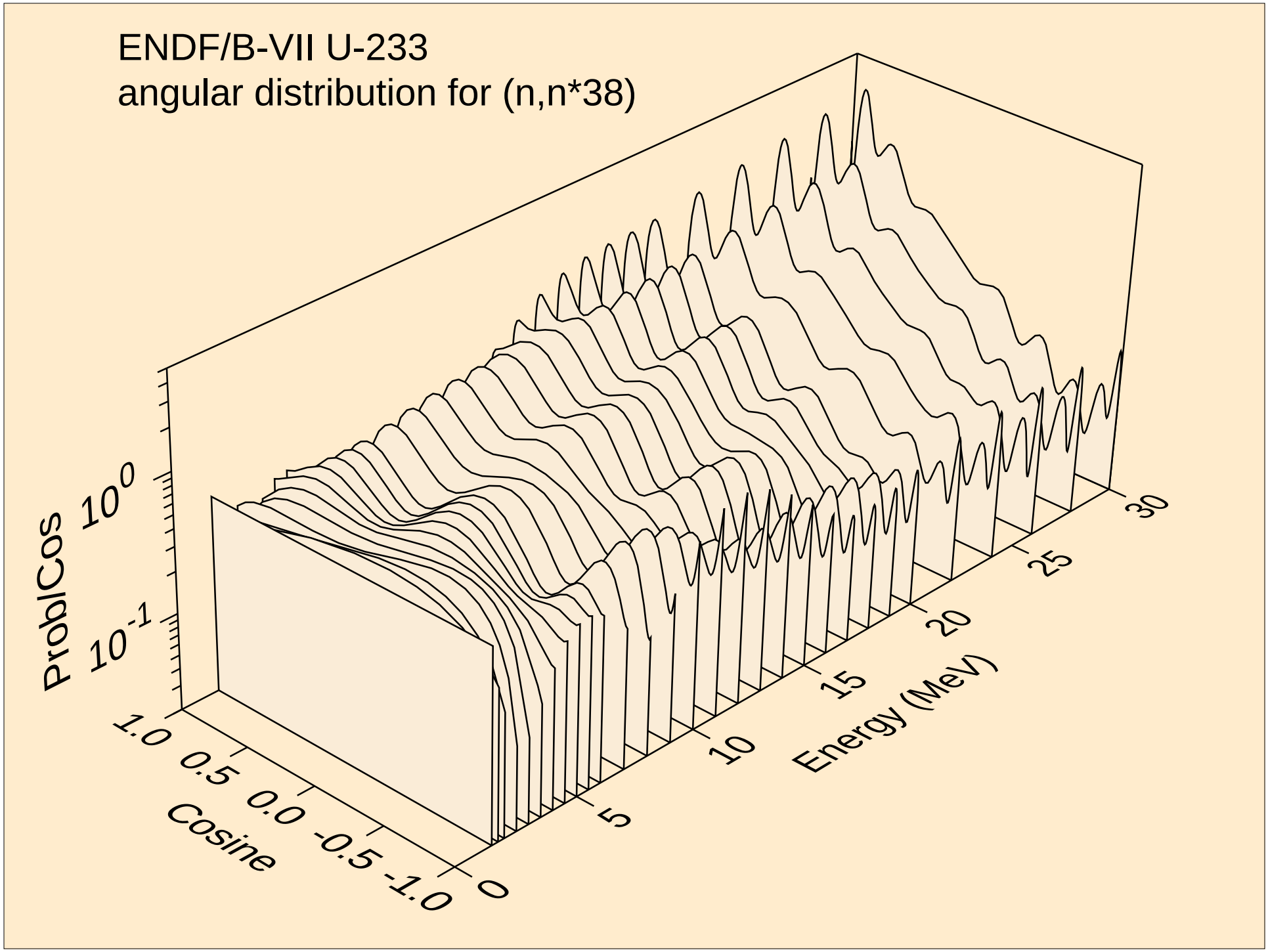
ENDF/B-VII U-233
angular distribution for (n,n*38)
ProbCos
$10^0$
$10^{-1}$
1.0
0.5
0.0
-0.5
-1.0
Cosine
0
5
10
15
20
25
30
Energy (MeV)

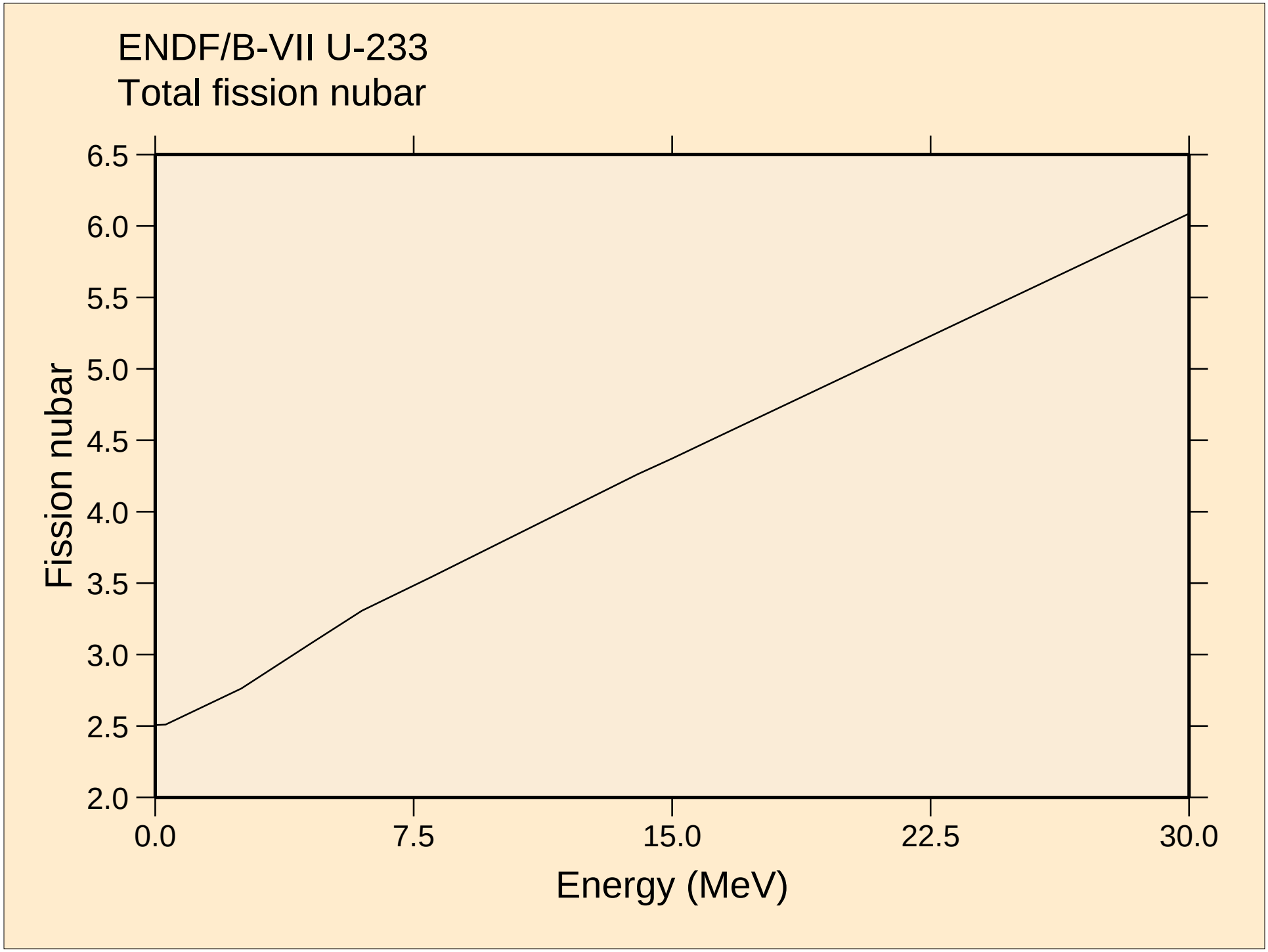
ENDF/B-VII U-233
Total fission nubar
Fission nubar
6.5
6.0
5.5
5.0
4.5
4.0
3.5
3.0
2.5
2.0
0.0
7.5
15.0
22.5
30.0
Energy (MeV)

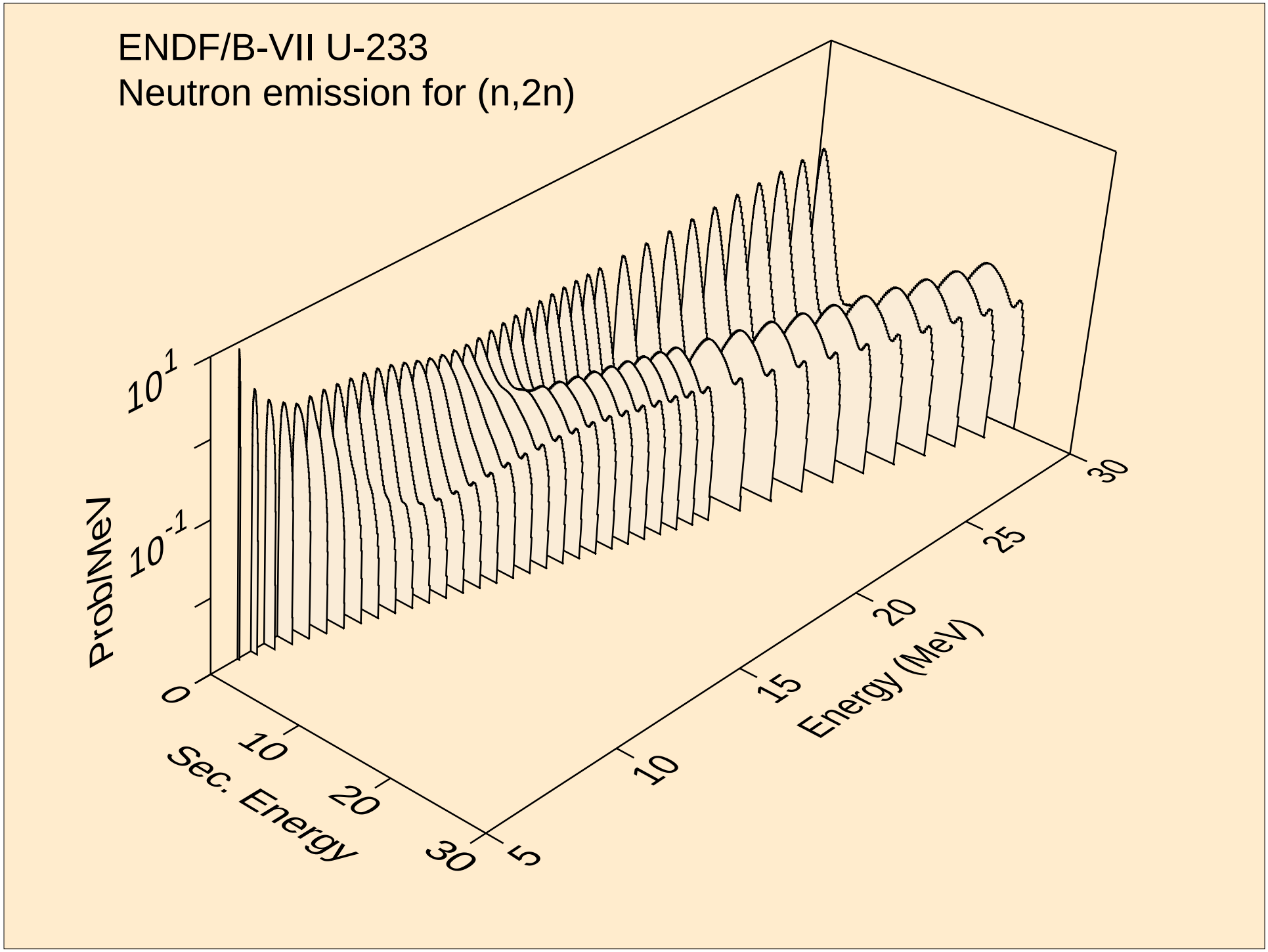
ENDF/B-VII U-233
Neutron emission for (n,2n)
Prob/MeV
$10^{1}$
$10^{-1}$
0
10
20
30
Sec. Energy
5
10
15
20
25
30
Energy (MeV)

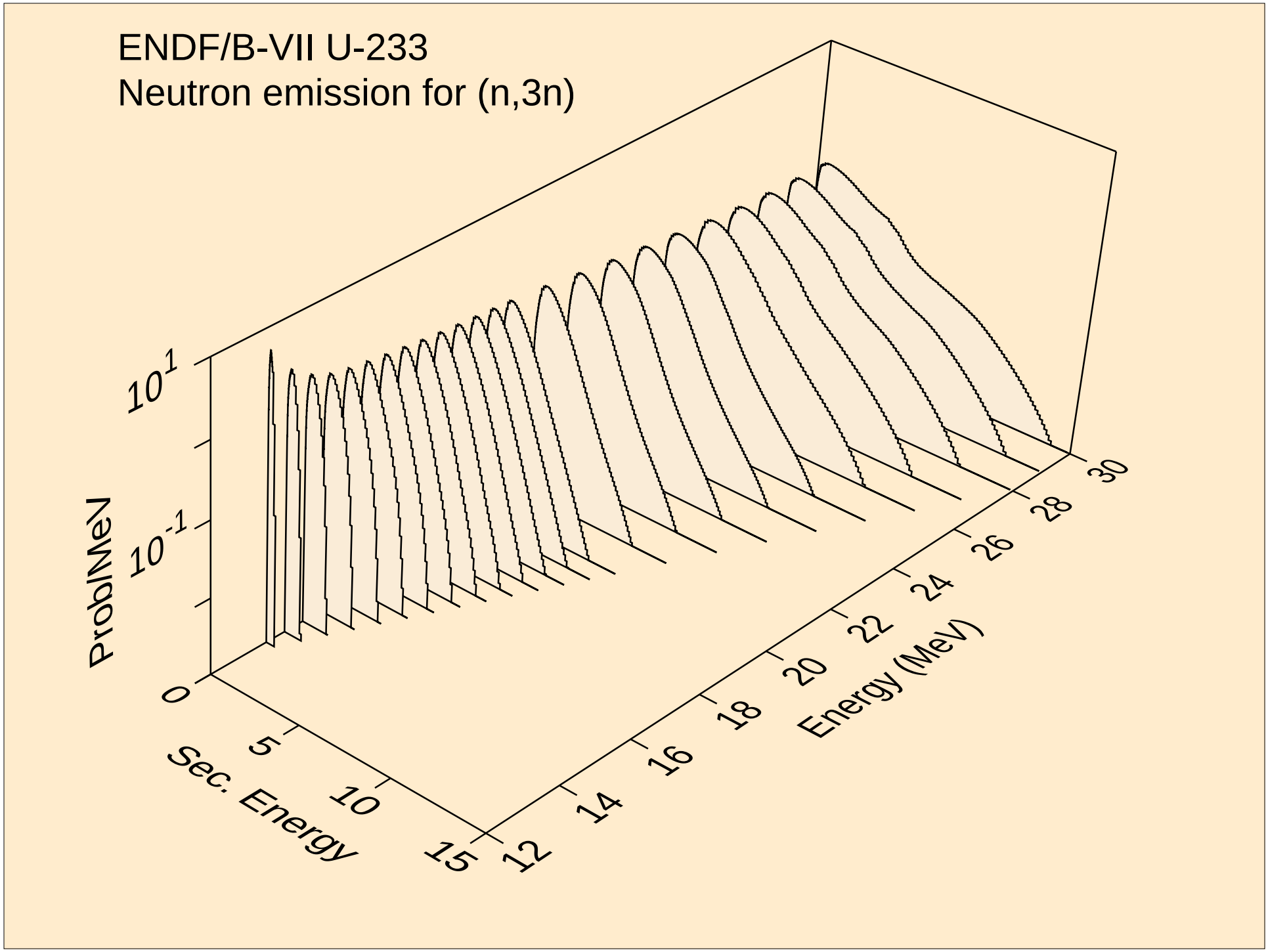
ENDF/B-VII U-233
Neutron emission for (n,3n)
Prob/MeV
$10^{1}$
$10^{-1}$
0
Sec. Energy
5
10
15
Energy (MeV)
12
14
16
18
20
22
24
26
28
30

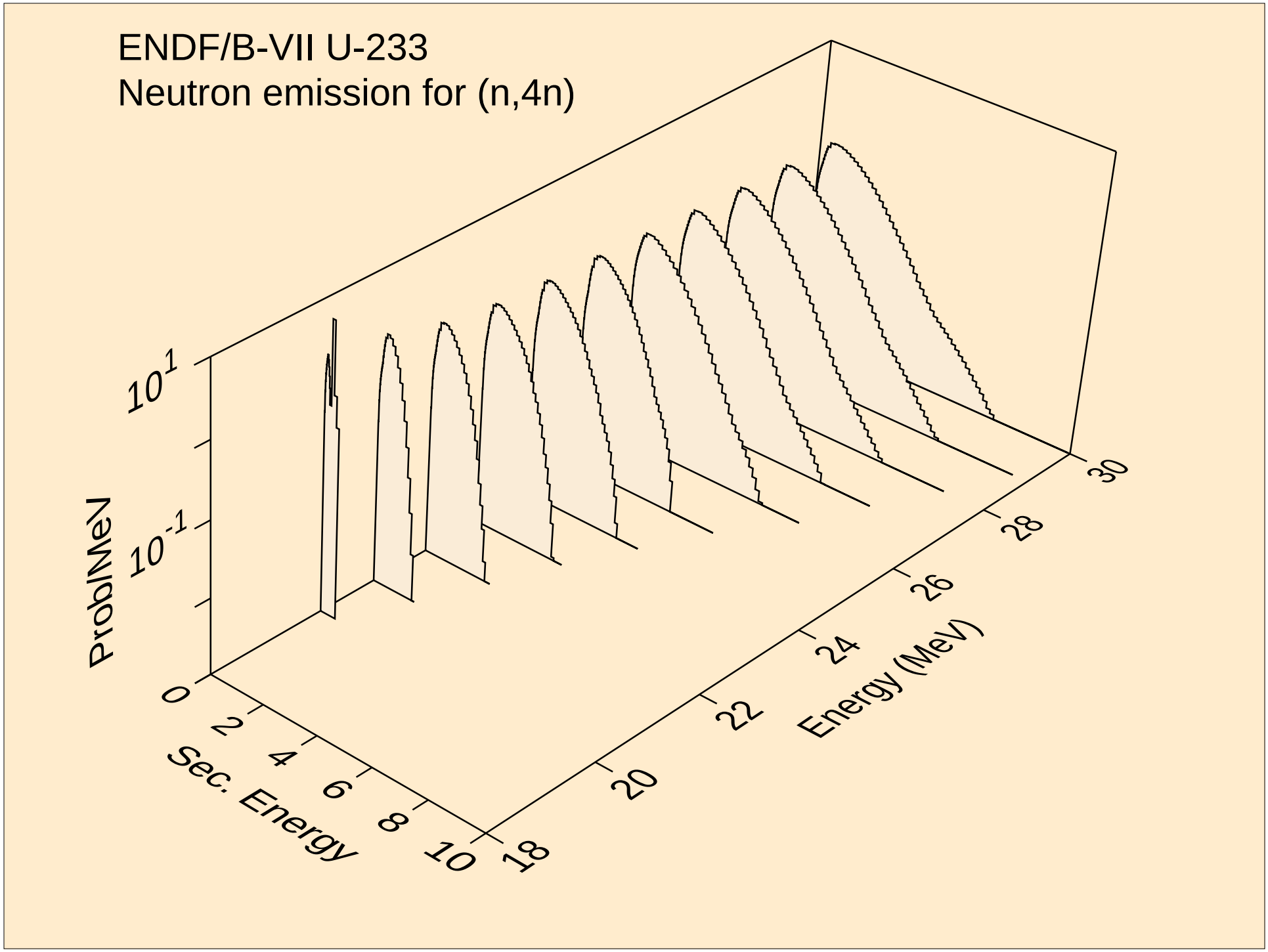
ENDF/B-VII U-233
Neutron emission for (n,4n)
Prob/MeV
$10^{1}$
$10^{-1}$
0
Sec. Energy
2
4
6
8
10
Energy (MeV)
18
20
22
24
26
28
30

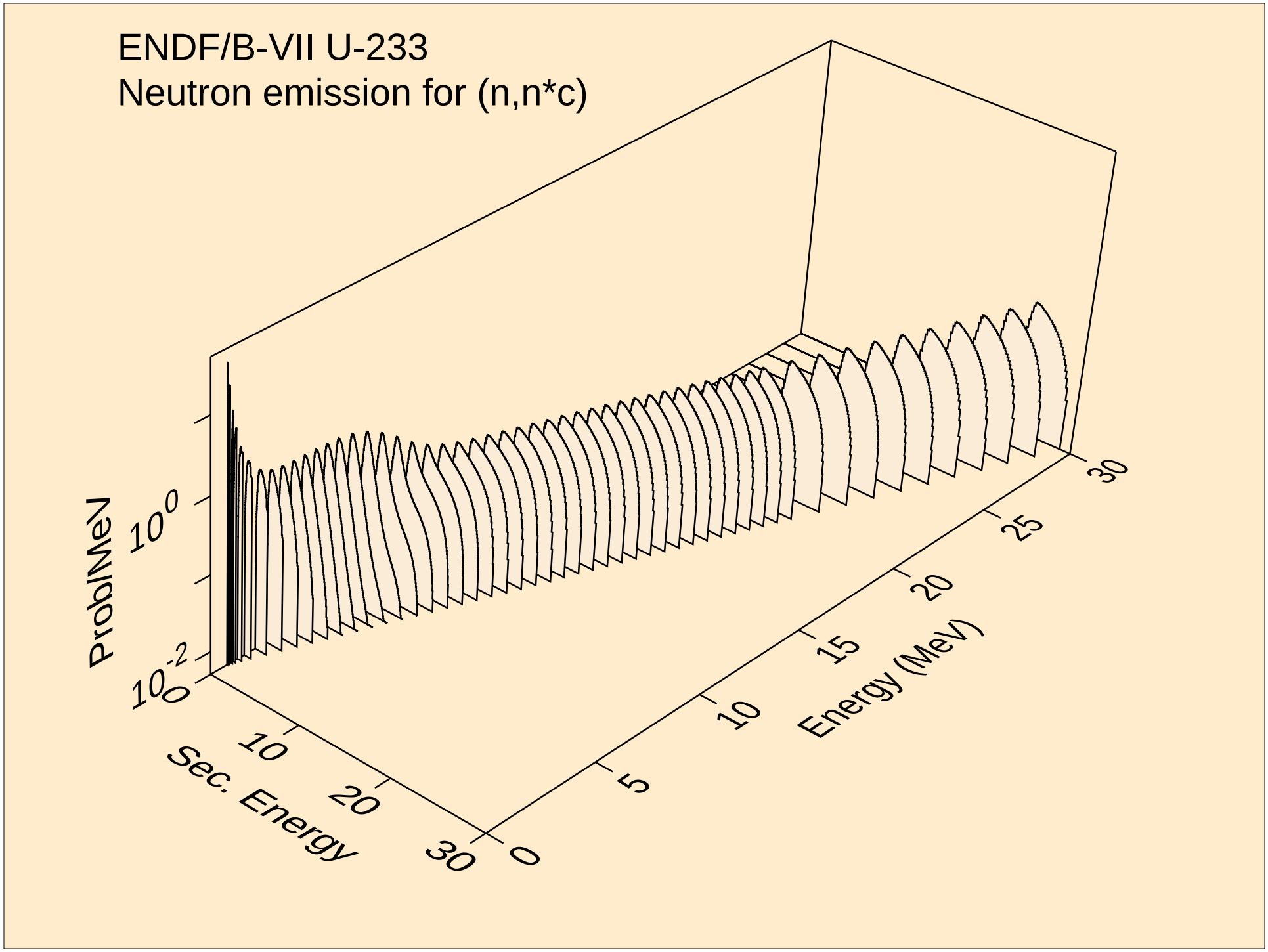
ENDF/B-VII U-233
Neutron emission for (n,n*c)
Prob/MeV
$10^{0}$
$10^{-2}$
0
10
20
30
Sec. Energy
0
5
10
15
20
25
30
Energy (MeV)

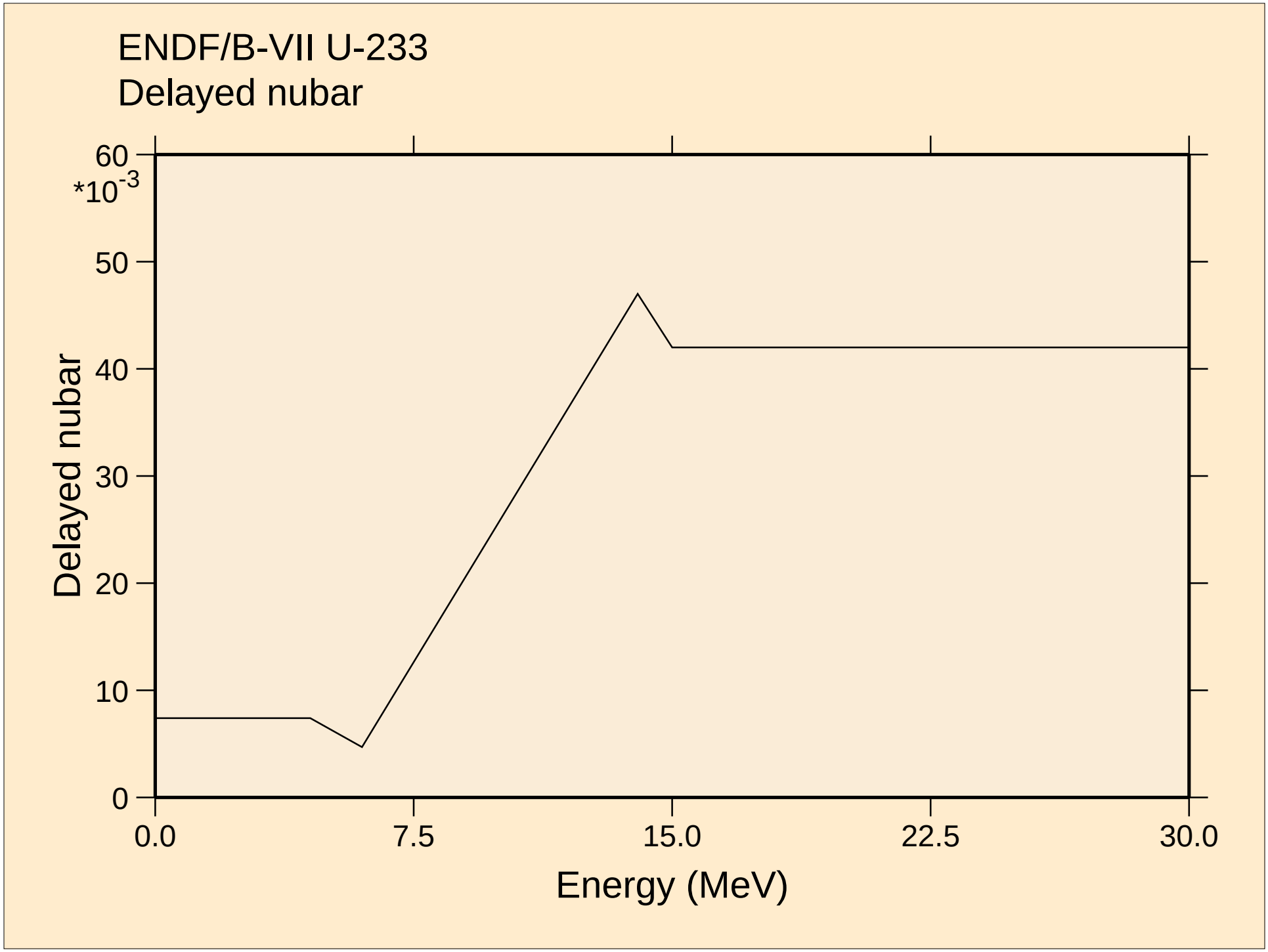
ENDF/B-VII U-233
Delayed nubar
60
*10-3
50
40
30
20
10
0
Delayed nubar
0.0
7.5
15.0
22.5
30.0
Energy (MeV)

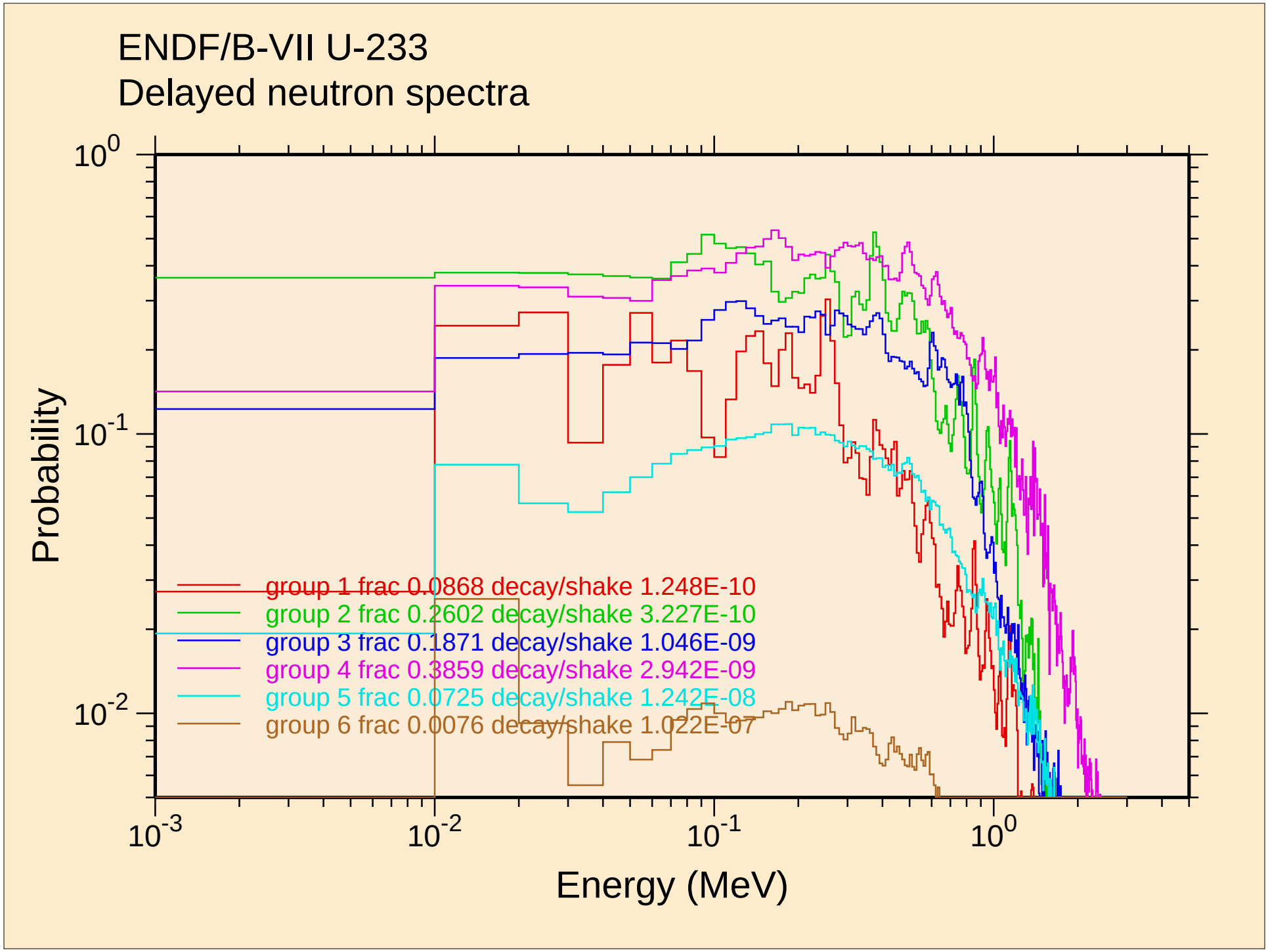
ENDF/B-VII U-233
Delayed neutron spectra
Probability
Energy (MeV)
$10^{0}$
$10^{-1}$
$10^{-2}$
$10^{-3}$
$10^{-2}$
$10^{-1}$
$10^{0}$
group 1 frac 0.0868 decay/shake 1.248E-10
group 2 frac 0.2602 decay/shake 3.227E-10
group 3 frac 0.1871 decay/shake 1.046E-09
group 4 frac 0.3859 decay/shake 2.942E-09
group 5 frac 0.0725 decay/shake 1.242E-08
group 6 frac 0.0076 decay/shake 1.022E-07

ENDF/B-VII U-233
Photon emission for inelastic

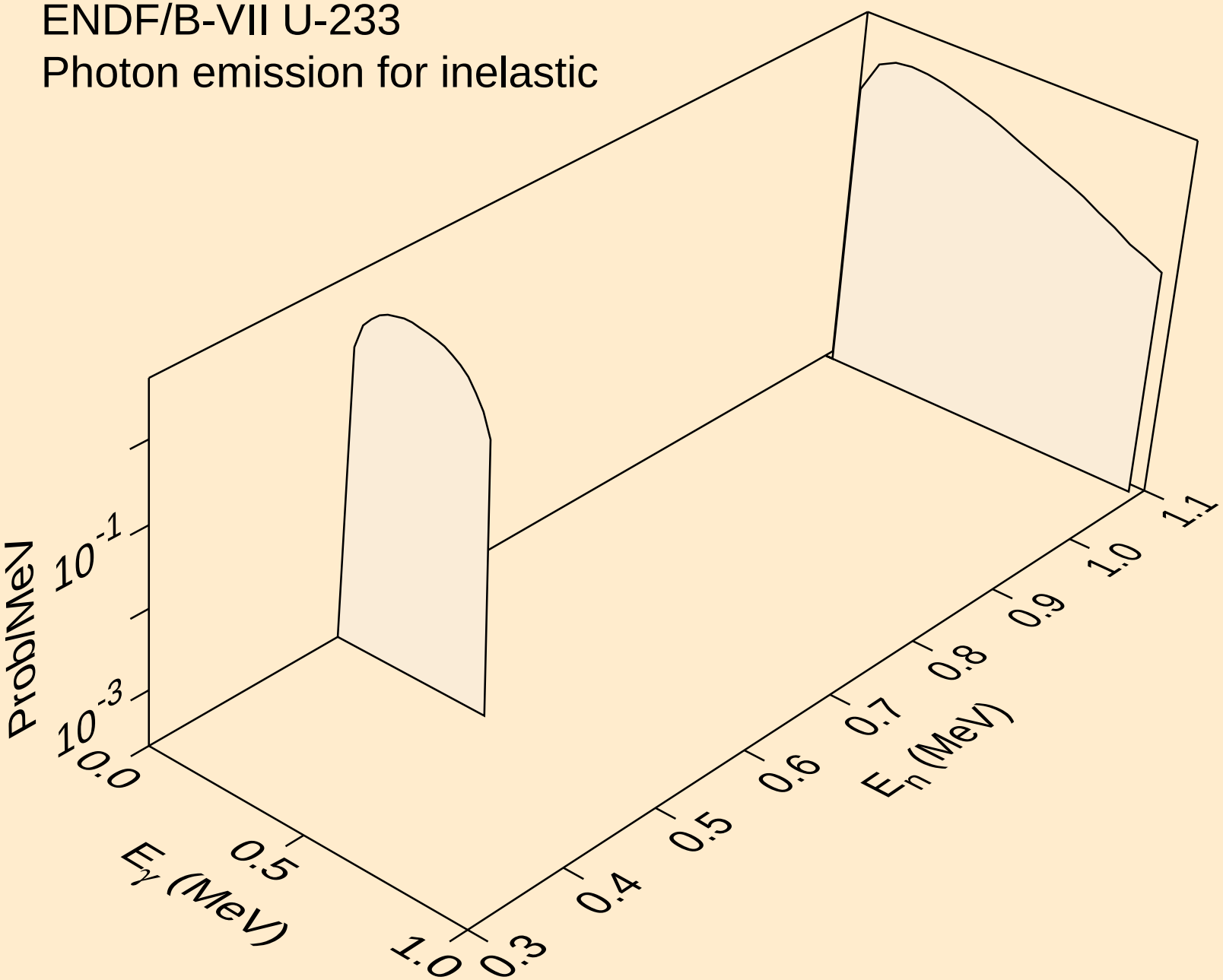

ENDF/B-VII U-233
Photon emission for fission

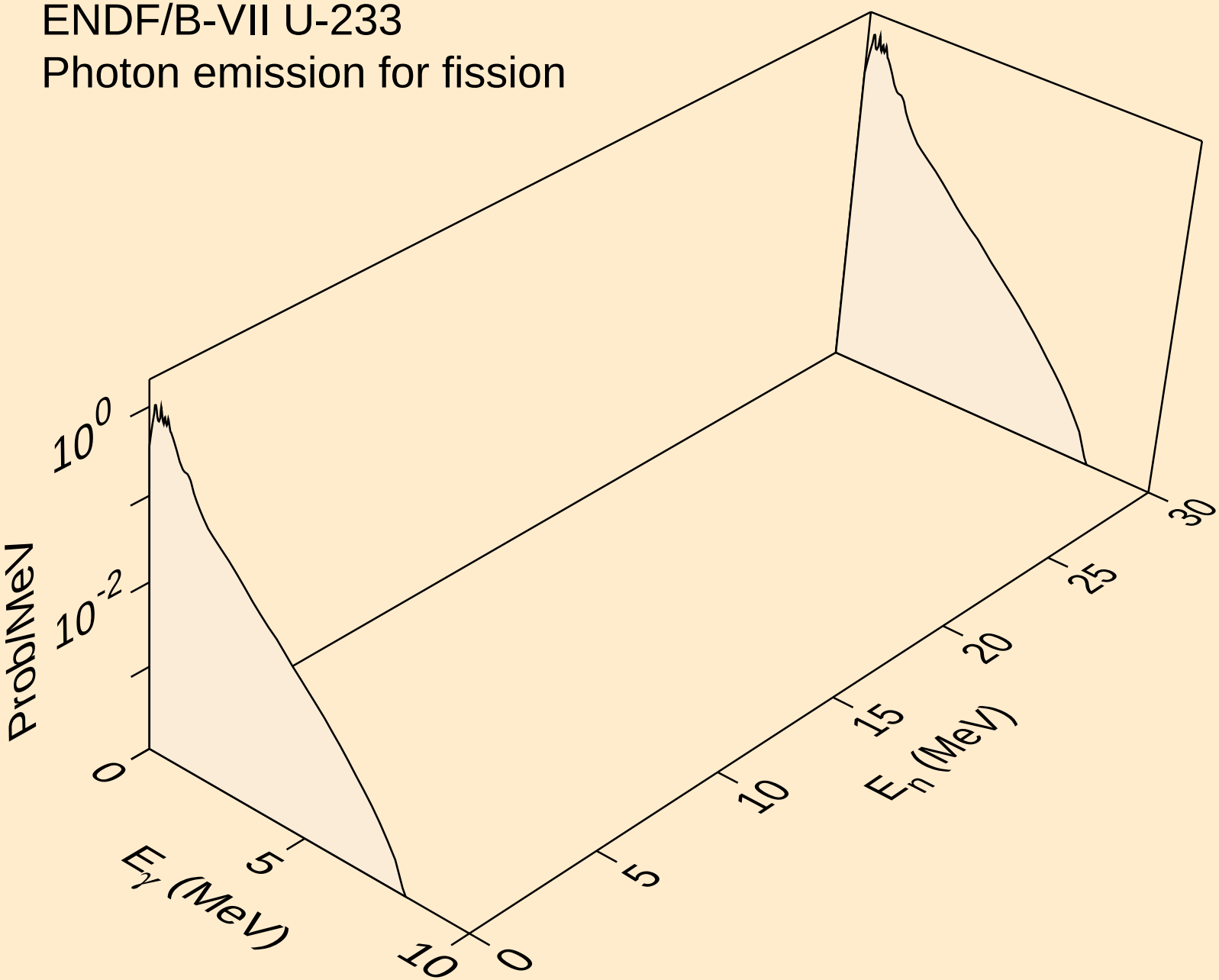

ENDF/B-VII U-233
Photon emission for (n,gma)

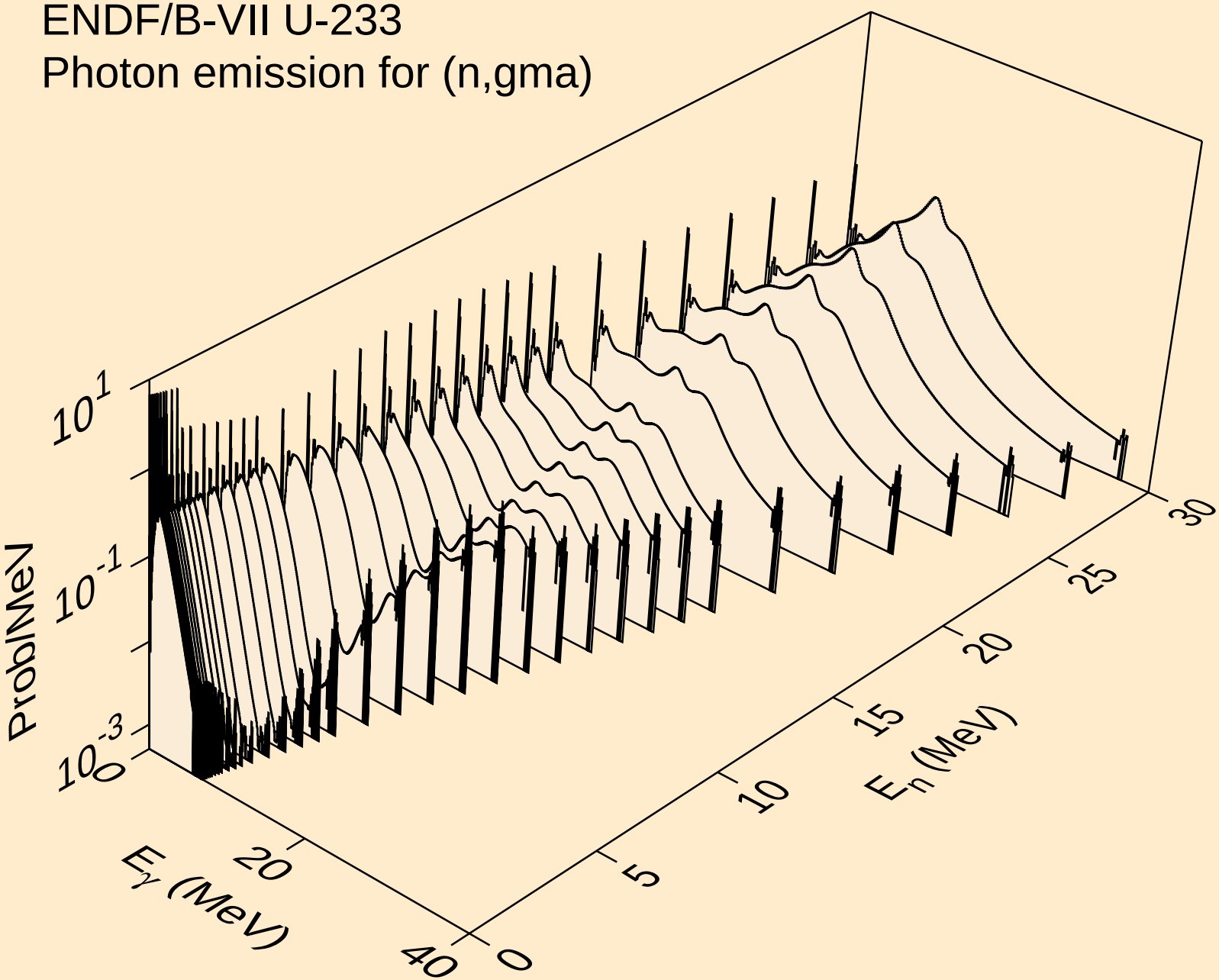

ENDF/B-VII U-233
Photon emission for nonelastic

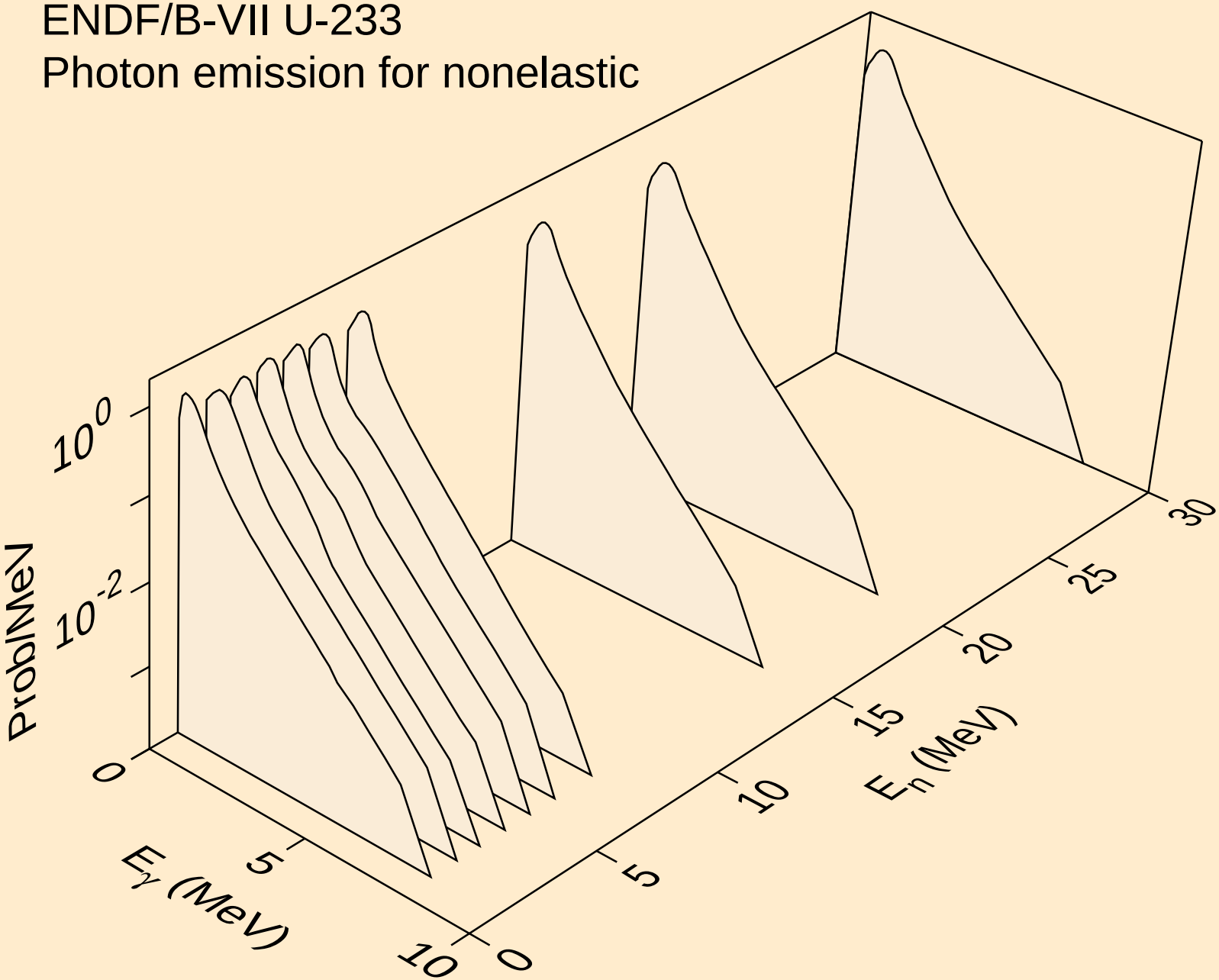

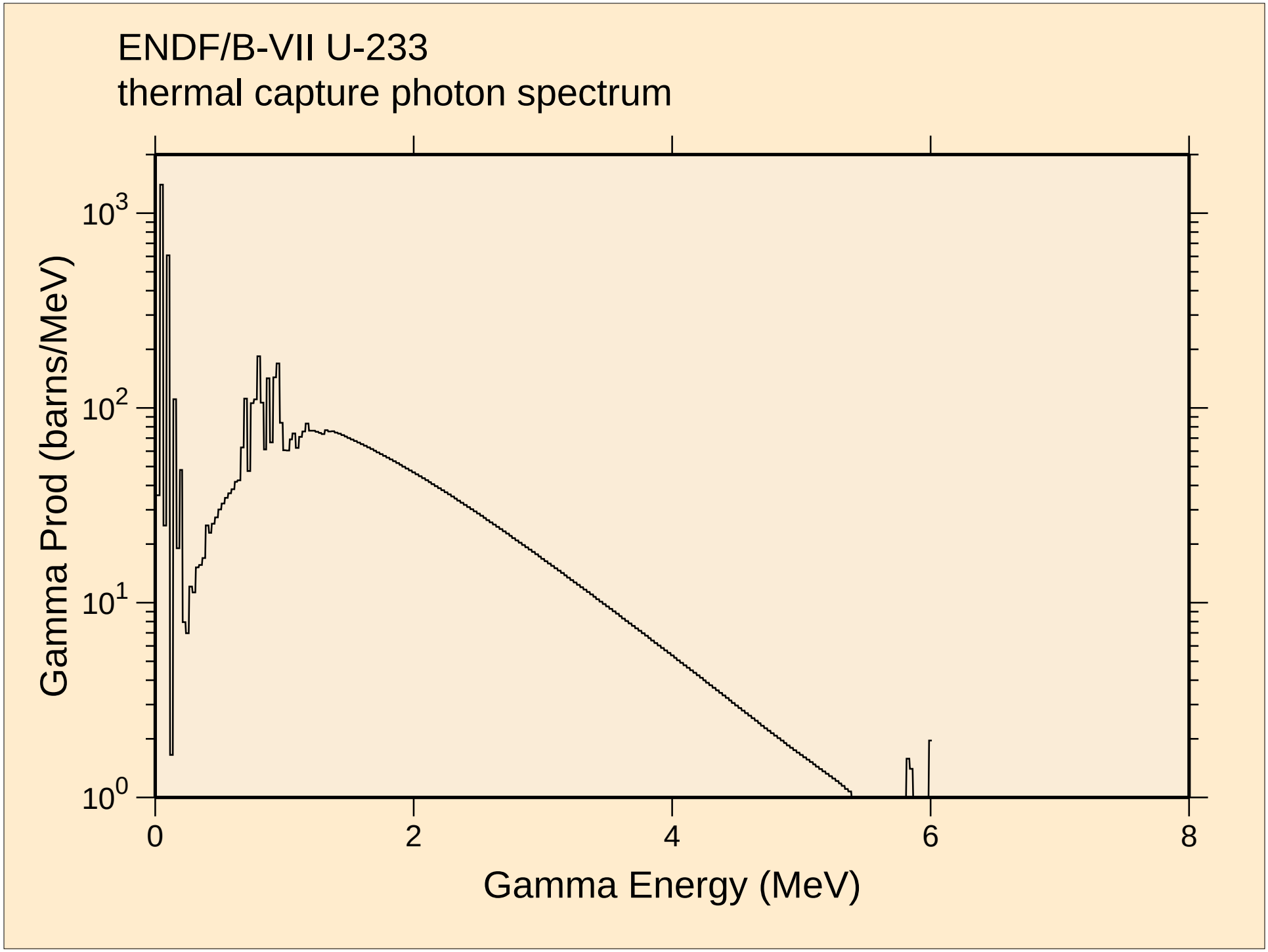
ENDF/B-VII U-233
thermal capture photon spectrum
Gamma Prod (barns/MeV)
$10^3$
$10^2$
$10^1$
$10^0$
0
2
4
6
8
Gamma Energy (MeV)

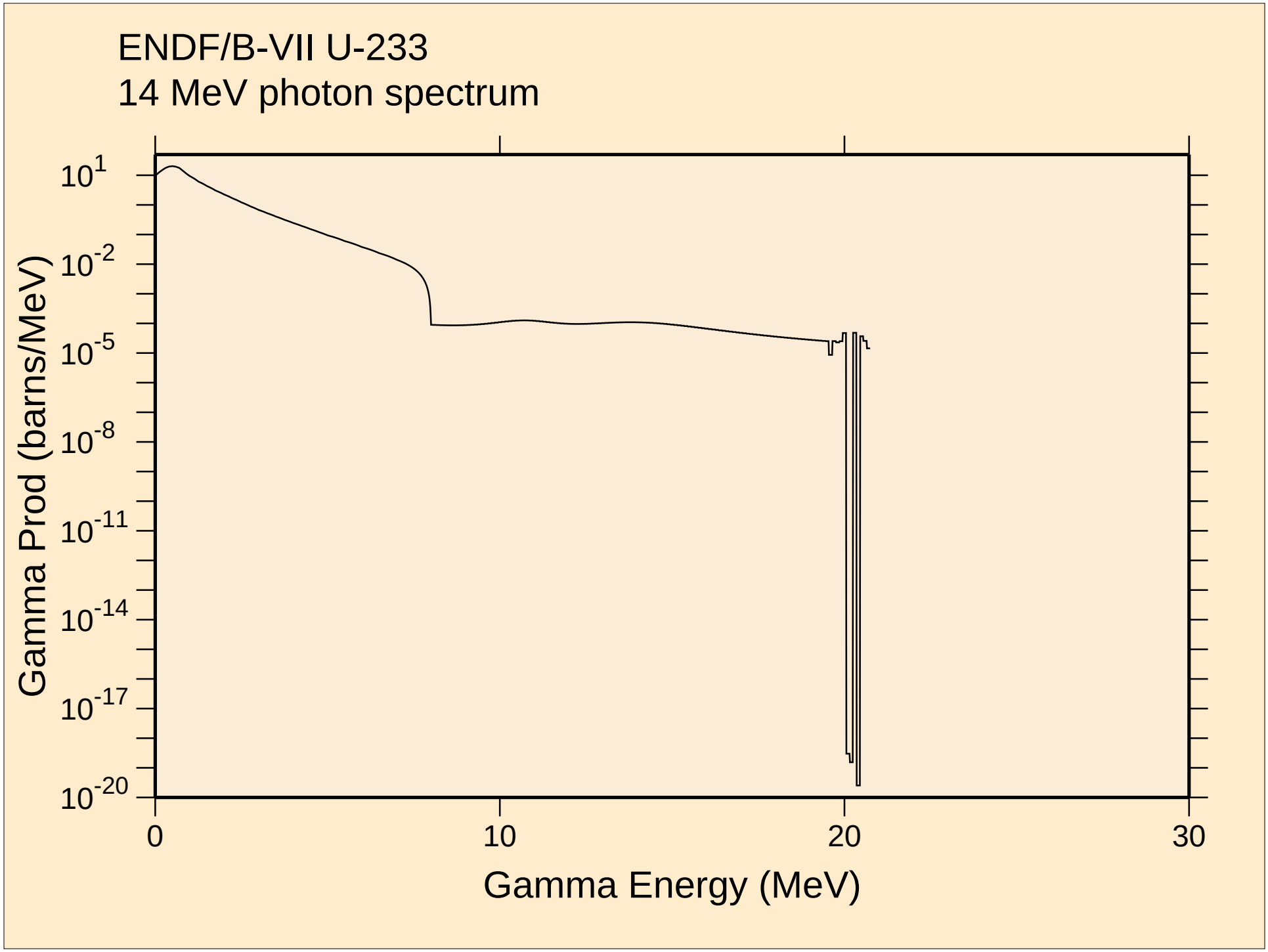
ENDF/B-VII U-233
14 MeV photon spectrum
Gamma Prod (barns/MeV)
10^1
10^-2
10^-5
10^-8
10^-11
10^-14
10^-17
10^-20
0
10
20
30
Gamma Energy (MeV)